ERC3

ERC3
Actuator with Integrated Controller

Instruction Manual Eighth Edition

IAI America, Inc.

Please Read Before Use

Thank you for purchasing our product.

This Instruction Manual describes all necessary information items to operate this product safely such as the operation procedure, structure and maintenance procedure.
Before the operation, read this manual carefully and fully understand it to operate this product safely.
The enclosed CD or DVD in this product package includes the Instruction Manual for this product.
For the operation of this product, print out the necessary sections in the Instruction Manual or display them using the personal computer.

After reading through this manual, keep this Instruction Manual at hand so that the operator of this product can read it whenever necessary.

[Important]

- This Instruction Manual is original.
- The product cannot be operated in any way unless expressly specified in this Instruction Manual. IAI shall assume no responsibility for the outcome of any operation not specified herein.
- Information contained in this Instruction Manual is subject to change without notice for the purpose of product improvement.
- If you have any question or comment regarding the content of this manual, please contact the IAI sales office near you.
- Using or copying all or part of this Instruction Manual without permission is prohibited.
- The company names, names of products and trademarks of each company shown in the sentences are registered trademarks.

Table of Contents

Safety Guide 1
Guideline for Control Method 8
Precautions in Operation 9
International Standards Compliances 13
Names of the Parts 14
Actuator Coordinate 23
Starting Procedures 24

Chapter 1 Specifications Check 31
1.1 Product Check 31
1.1.1 Parts 31
1.1.2 Teaching Tool 32
1.1.3 Instruction manuals related to this product, which are contained in the DVD. 32
1.1.4 How to read the model plate 33
1.1.5 How to read the model 34
1.2 Specifications 36
1.2.1 Actuator 36
[1] High Output Setting 36
[2] Maximum speed 38
[3] MAX. Acceleration, Payload Capacity 40
[4] Driving System • Position Detector 52
[5] Positioning Precision 53
[6] Current Limit Value and Pressing Force 54
[7] Option 58
1.2.2 Built-in Controller 59
[1] Basic Specifications 59
[2] I/O Specifications 60
1.2.3 Control Option 62
[1] PIO Converter (Model: RCB-□□□) 62
[2] Quick Teach (Model: RCM-PST-□) 66

Chapter 2 Installation 69
2.1 Transportation 69
[1] Handling of Actuator, PIO Converter and Quick Teach 69
[2] Handling of Multi-Axes Type 70
[3] Handling of Robot Mounted on Mechanical Equipment (System) 70
2.2 Installation and Storage Environment 71
[1] Installation Environment 71
[2] Storage • Preservation Environment 72
2.3 How to Install 73
2.3.1 Posture of Actuator Attachment 73
2.3.2 Installation of Slider Type 74
[1] Attachment of Actuator Body 74
[2] Load Attachment 77
2.3.3 Installation of Rod Type 79
[1] Installation of Actuator Type Unit 79
[2] Load Attachment 84
2.3.4 Noise Prevention and How to Attach Electrical Devices 86
[1] Noise Elimination Grounding (Frame Ground) 86
[2] Precautions regarding wiring method 90
[3] Noise Sources and Elimination 90
[4] Cooling Factors and Installation 90

Chapter 3 Wiring ····· 93
3.1 Positioner Mode 1 (Standard Type) ····· 93
3.1.1 Wiring Diagram (Connection of construction devices) ····· 93
3.1.2 PIO Pattern Select and PIO Signal ····· 94
[1] PIO Pattern (Control Pattern) Selection ····· 94
[2] PIO Patterns and Signal Assignment ····· 95
[3] List of PIO Signals ····· 96
3.1.3 Circuit Diagram ····· 97
[1] Power Line and Emergency Stop Circuit ····· 97
[2] PIO Circuit ····· 98
3.2 Pulse Train Control Mode ····· 101
3.2.1 Wiring Diagram (Connection of construction devices) ····· 101
3.2.2 PIO Pattern Selection and PIO Signal ····· 102
[1] PIO Pattern (Control Pattern) Selection ····· 102
[2] PIO pattern and Signal Allocation ····· 102
[3] List of PIO Signals ····· 103
3.2.3 Circuit Diagram ····· 104
[1] Power Line and Emergency Stop Circuit ····· 104
[2] Command Pulse Train Circuit ····· 105
[3] PIO Circuit ····· 106
3.3 Positioner Mode 2 (Extension Type by PIO Converter) ····· 108
3.3.1 Wiring Diagram (Connection of construction devices) ····· 108
3.3.2 PIO Pattern Selection and PIO Signal ····· 109
[1] PIO Pattern (Control Pattern) Selection ····· 109
[2] PIO Patterns and Signal Assignment ····· 110
[3] List of PIO Signals ····· 112
3.3.3 Circuit Diagram ····· 114
[1] Power Line and Emergency Stop Circuit ····· 114
[2] PIO Converter to ERC3 ····· 116
[3] PIO Circuit ····· 117
3.4 MEC Mode 1 (Operation with PLC) ····· 123
3.4.1 Wiring Diagram (Connection of construction devices) ····· 123
3.4.2 PIO Pattern Selection and PIO Signal ····· 124
[1] Operation pattern ····· 124
[2] Operation Patterns and Signal Assignments ····· 125
[3] List of PIO Signals ····· 126
3.4.3 Circuit Diagram ····· 127
[1] Power Line and Emergency Stop Circuit ····· 127
[2] PIO Circuit ····· 128
3.5 MEC Mode 2 (Operation Using PIO Converter) ····· 130
3.5.1 Wiring Diagram (Connection of construction devices) ····· 130
3.5.2 PIO Pattern Selection and PIO Signal ····· 131
[1] Operation pattern ····· 131
[2] Operation Patterns and Signal Assignments ····· 132
[3] List of PIO Signals ····· 133
3.5.3 Circuit Diagram ····· 134
[1] Power Line and Emergency Stop Circuit ····· 134
[2] PIO Converter to ERC3 ····· 136
[3] PIO Circuit ····· 137
3.6 MEC Mode 3 (Solo Operation with Quick Teach) ····· 139
3.6.1 Wiring Diagram (Connection of construction devices) ····· 139
[1] RCM-PST-0 (24V DC power supply type) ····· 139
[2] RCM-PST-1 ····· 140
[3] RCM-PST-2/RCM-PST-EU ····· 141

3.7 Wiring Method 142
3.7.1 Wiring of Actuator 142
[1] PIO type power and I/O cable (Model : CB-ERC3P-PWBIO□□□) 142
[2] SIO type power and I/O cable (Model : CB-ERC3S-PWBIO□□□) 143
3.7.2 Wiring between PIO Converter and Quick Teach 144
3.7.3 Wiring between PIO Converter and Host Controller (e.g. PLC) 145
3.7.4 Wiring of PIO Converter Power Line Connector 149
3.7.5 Pulse Converter: AK-04 (Optional accessory) 150
3.7.6 Teaching Port Connector Connection of ERC3 Main Unit 151
3.7.7 Connection of SIO Connector of PIO Converter 152

Chapter 4 Operation 153
4.1 Basic Operation 153
4.1.1 Basic Operation Methods 153
[1] Positioner Mode 1 (PIO Operation of ERC3) 153
[2] Pulse Train Control Mode (Pulse Train Operation of ERC3) 154
[3] Positioner Mode 2 (Extended Operation of ERC3) 155
[4] MEC Mode 1 156
[5] MEC Mode 2 157
[6] MEC Mode 3 157
4.1.2 Parameter Settings 158
4.2 Operation in Positioner Mode 159
4.2.1 Set of Position Table 159
4.2.2 Operation in Positioner Mode 1 164
[1] PIO Pattern Selection and Main Functions 164
[2] Overview of major Functions 165
[3] Power Supply and Emergency Stop Release (CP, MP, EMG, PEND) 166
[4] Brake release BK 167
[5] Time Constant for Control Signal Input 167
[6] Operation Ready and Auxiliary Signals 168
[7] Operation with the Position No. Input = Operations of PIO Patterns 0 and 2 172
[8] Direct Position Specification (3-point <Solenoid valve> type) = PIO Pattern 1 185
4.2.3 Operation in Positioner Mode 2 (Operation Using PIO Converter) 197
[1] PIO Pattern Selection and Main Functions 197
[2] Overview of major Functions 198
[3] Power Supply and Emergency Stop Release (CP24, MPI, MPO, EMG(-)) 199
[4] Time Constant for Control Signal Input 199
[5] Operation Ready and Auxiliary Signals 200
[6] Operation with the Position No. Input = Operations of PIO Patterns 0 to 3 209
[7] Direct Position Specification (Solenoid Valve Mode 1) = Operation of PIO Pattern 4 226
[8] Direct Position Specification (Solenoid Valve Mode 2) = Operations of PIO Pattern 5 in PIO Converter 238
4.3 Operation in Pulse Train Control Mode (How to Operate Pulse Train Control Type) 245
[1] Guideline for PIO Pattern Selection and Supportive Functions 245
[2] Guideline for Supportive Functions 245
[3] Power Supply and Emergency Stop Release (CP, MP, EMG) 246
[4] Brake Release BK 246
[5] Time Constant for Control Signal Input 247
[6] Operation Ready and Auxiliary Signals 247
[7] Pulse Train Input Operation 251
[8] Settings of Basic Parameters Required for Operation 254
[9] Parameter Settings Required for Advanced Operations 257

4.4 Operation in MEC Mode 1 and 2 (Operation with PLC) ····· 259
[1] Outline for Operation Patterns and Functions ····· 259
[2] Table for Operational Conditions (Position Table) and Positioning Complete Signal ····· 260
[3] Power Supply and Emergency Stop Release ····· 264
[4] Brake release BK ····· 266
[5] Time Constant for Control Signal Input ····· 266
[6] Operation when Operation Pattern is “2-Point Stop (2-Point Positioning)” ····· 267
[7] Operation when Operation Pattern is “3-Point Stop (3-Point Positioning)” ····· 268
4.5 Operation in MEC Mode 3 (Test Run with Quick Teach.) ····· 271
4.5.1 Operation Panel Functions ····· 271
4.5.2 Operations ····· 272
[1] Switches Used for Mode Selection (Auto ⇔ Manual) ····· 272
[2] Switch Used for Servo ON/OFF Operation ····· 272
[3] Switch Used for Home-Return Operation ····· 272
[4] Switches Used for Manual Operation ····· 272
[5] Switch Used for Brake Release ····· 273
[6] Switches Used to Change Positioning Point Number ····· 273
[7] Switches Used for Position Teaching ····· 274
[8] Switches and Rotary Knobs Used in Acceleration/Deceleration and Speed Settings ····· 277
[9] Switches Used in Test Run ····· 277
[10] Switches Used in Alarm Reset ····· 277
4.5.3 Test Run with Operation Panel ····· 278

Chapter 5 Power-saving Function (Automatic Servo-off and Full Servo Functions) ····· 287
5.1 Positioner Mode 1 and 2 ····· 287
5.2 Pulse Train Control Mode ····· 290
5.3 MEC Mode 1, 2 and 3 ····· 291
5.3.1 Automatic Servo-off Function ····· 291
5.3.2 Full Servo Function ····· 293

Chapter 6 Adjustment of Operation ····· 295
6.1 Absolute Reset and Absolute Battery ····· 295
6.1.1 Absolute Reset ····· 295
[1] Absolute reset procedure from teaching tool ····· 295
[2] Absolute reset using PIO ····· 296
[3] Absolute Battery ····· 298
6.2 High Output Setting and Gain Scheduling Function ····· 301
6.2.1 High Output Setting ····· 301
6.2.2 Gain Scheduling Function ····· 301
6.2.3 Setting in Positioner Mode 1 & 2 and Pulse Train Control Mode ····· 301
6.2.4 Setting in MEC Mode 1 to 3 ····· 302
6.3 I/O Parameter ····· 303
6.3.1 Positioner Mode 1, Positioner Mode 2 and Pulse Train Control Mode ····· 304
[1] I/O Parameter List ····· 304
[2] Detail Explanation of Parameters ····· 308
[3] Servo Adjustment ····· 335
6.3.2 MEC Mode 1, MEC Mode 2 and MEC Mode 3 ····· 338
[1] I/O Parameter List ····· 338
[2] Detail Explanation of Parameters ····· 340
[3] Servo Adjustment ····· 348

Chapter 7 Troubleshooting ····· 351
7.1 Action to Be Taken upon Occurrence of Problem ····· 351
7.2 Fault Diagnosis ····· 353
7.2.1 Impossible operation of controller ····· 353
7.2.2 Positioning and speed of poor precision (incorrect operation) ····· 358
7.2.3 Generation of noise and/or vibration ····· 360
7.3 Alarm Level ····· 361
7.4 Alarm List ····· 362

Chapter 8 Actuator Maintenance Check ····· 375
8.1 Inspection Items and Schedule ····· 375
8.2 External Visual Inspection ····· 375
8.3 Cleaning ····· 375
8.4 Internal Inspections for Slider Type ····· 376
8.5 Internal Cleaning for Slider Type ····· 376
8.6 Grease Supply ····· 377
8.6.1 Grease Supply for Slider Type ····· 377
8.6.2 How to Supply Grease on Slider Type ····· 378
8.6.3 Grease Supply for Rod Type ····· 380
8.6.4 How to Supply Grease on Rod Type ····· 381
8.7 Motor Replacement Process ····· 383

Chapter 9 External Dimensions ····· 385
9.1 ERC3-SA5C ····· 385
9.2 ERC3-SA7C ····· 386
9.3 ERC3-RA4C ····· 387
9.4 ERC3-RA6C ····· 388

Chapter 10 Appendix ····· 389
10.1 Input and Output Response Performance When PIO Converter is Used ····· 389
10.2 Way to Set Multiple Controllers with 1 Teaching Tool ····· 390
10.2.1 Connecting Example ····· 391
10.2.2 Detailed Connection Diagram of Communication Lines ····· 392
10.2.3 Axis No. Setting ····· 392
10.2.4 Handling of e-CON connector (how to connect) ····· 393
10.2.5 SIO Converter ····· 394
10.2.6 Communications Cable ····· 396
10.3 Conformity to Safety Category ····· 397
[1] System Configuration ····· 397
[2] Wiring and setting of safety circuit ····· 398
[3] Examples of safety circuits ····· 400
[4] TP adapter and accessories ····· 406
10.4 When Connecting Power Supply with + Grounding ····· 408

10.5 Example of Basic Positioning Sequence (PIO Patterns 0 to 3 in PIO Converter) 409
10.5.1 I/O Assignment 409
10.5.2 Ladder Sequence 410
[1] Servo ON (Emergency Stop) Circuit 410
[2] Operation and Stop Circuit 410
[3] Pause Circuit 411
[4] Reset Circuit 412
[5] Home Return Circuit 413
[6] Decode Circuit of Positioning Complete Position No. 414
[7] Actuator Start Circuit 414
[8] Position 1 Operation Circuit 415
[9] Position 2 Operation Circuit 416
[10] Position 3 Operation Circuit 417
[11] Commanded Position No. Output Ready Circuit 418
[12] Commanded Position No. Output Circuit 419
[13] Start Signal Output Circuit 419
[14] Other Display Circuits (Zone 1, Position Zone, and Manual Mode) 420
10.6 Life 421
10.6.1 Product Life of Slider Type 421
10.6.2 Product Life of Rod Type 421

Chapter 11 Warranty 423
11.1 Warranty Period 423
11.2 Scope of the Warranty 423
11.3 Honoring the Warranty 423
11.4 Limited Liability 423
11.5 Conditions of Conformance with Applicable Standards/Regulations, Etc., and Applications 424
11.6 Other Items Excluded from Warranty 424

Change History 425

Safety Guide

"Safety Guide" has been written to use the machine safely and so prevent personal injury or property damage beforehand. Make sure to read it before the operation of this product.

Safety Precautions for Our Products

The common safety precautions for the use of any of our robots in each operation.

No.	Operation Description	Description
1	Model Selection	● This product has not been planned and designed for the application where high level of safety is required, so the guarantee of the protection of human life is impossible. Accordingly, do not use it in any of the following applications. 1) Medical equipment used to maintain, control or otherwise affect human life or physical health. 2) Mechanisms and machinery designed for the purpose of moving or transporting people (For vehicle, railway facility or air navigation facility) 3) Important safety parts of machinery (Safety device, etc.) ● Do not use the product outside the specifications. Failure to do so may considerably shorten the life of the product. ● Do not use it in any of the following environments. 1) Location where there is any inflammable gas, inflammable object or explosive 2) Place with potential exposure to radiation 3) Location with the ambient temperature or relative humidity exceeding the specification range 4) Location where radiant heat is added from direct sunlight or other large heat source 5) Location where condensation occurs due to abrupt temperature changes 6) Location where there is any corrosive gas (sulfuric acid or hydrochloric acid) 7) Location exposed to significant amount of dust, salt or iron powder 8) Location subject to direct vibration or impact ● For an actuator used in vertical orientation, select a model which is equipped with a brake. If selecting a model with no brake, the moving part may drop when the power is turned OFF and may cause an accident such as an injury or damage on the work piece.

No.	Operation Description	Description
2	Transportation	● When carrying a heavy object, do the work with two or more persons or utilize equipment such as crane. ● When the work is carried out with 2 or more persons, make it clear who is to be the leader and who to be the follower(s) and communicate well with each other to ensure the safety of the workers. ● When in transportation, consider well about the positions to hold, weight and weight balance and pay special attention to the carried object so it would not get hit or dropped. ● Transport it using an appropriate transportation measure. The actuators available for transportation with a crane have eyebolts attached or there are tapped holes to attach bolts. Follow the instructions in the instruction manual for each model. ● Do not step or sit on the package. ● Do not put any heavy thing that can deform the package, on it. ● When using a crane capable of 1t or more of weight, have an operator who has qualifications for crane operation and sling work. ● When using a crane or equivalent equipments, make sure not to hang a load that weighs more than the equipment's capability limit. ● Use a hook that is suitable for the load. Consider the safety factor of the hook in such factors as shear strength. ● Do not get on the load that is hung on a crane. ● Do not leave a load hung up with a crane. ● Do not stand under the load that is hung up with a crane.
3	Storage and Preservation	● The storage and preservation environment conforms to the installation environment. However, especially give consideration to the prevention of condensation. ● Store the products with a consideration not to fall them over or drop due to an act of God such as earthquake.
4	Installation and Start	(1) Installation of Robot Main Body and Controller, etc. ● Make sure to securely hold and fix the product (including the work part). A fall, drop or abnormal motion of the product may cause a damage or injury. Also, be equipped for a fall-over or drop due to an act of God such as earthquake. ● Do not get on or put anything on the product. Failure to do so may cause an accidental fall, injury or damage to the product due to a drop of anything, malfunction of the product, performance degradation, or shortening of its life. ● When using the product in any of the places specified below, provide a sufficient shield. 1) Location where electric noise is generated 2) Location where high electrical or magnetic field is present 3) Location with the mains or power lines passing nearby 4) Location where the product may come in contact with water, oil or chemical droplets

No.	Operation Description	Description
4	Installation and Start	(2) Cable Wiring ● Use our company's genuine cables for connecting between the actuator and controller, and for the teaching tool. ● Do not scratch on the cable. Do not bend it forcibly. Do not pull it. Do not coil it around. Do not insert it. Do not put any heavy thing on it. Failure to do so may cause a fire, electric shock or malfunction due to leakage or continuity error. ● Perform the wiring for the product, after turning OFF the power to the unit, so that there is no wiring error. ● When the direct current power (+24V) is connected, take the great care of the directions of positive and negative poles. If the connection direction is not correct, it might cause a fire, product breakdown or malfunction. ● Connect the cable connector securely so that there is no disconnection or looseness. Failure to do so may cause a fire, electric shock or malfunction of the product. ● Never cut and/or reconnect the cables supplied with the product for the purpose of extending or shortening the cable length. Failure to do so may cause the product to malfunction or cause fire.
		(3) Grounding ● The grounding operation should be performed to prevent an electric shock or electrostatic charge, enhance the noise-resistance ability and control the unnecessary electromagnetic radiation. ● For the ground terminal on the AC power cable of the controller and the grounding plate in the control panel, make sure to use a twisted pair cable with wire thickness 0.5mm^2 (AWG20 or equivalent) or more for grounding work. For security grounding, it is necessary to select an appropriate wire thickness suitable for the load. Perform wiring that satisfies the specifications (electrical equipment technical standards). ● Perform Class D Grounding (former Class 3 Grounding with ground resistance 100Ω or below).

No.	Operation Description	Description
4	Installation and Start	(4) Safety Measures ● When the work is carried out with 2 or more persons, make it clear who is to be the leader and who to be the follower(s) and communicate well with each other to ensure the safety of the workers. ● When the product is under operation or in the ready mode, take the safety measures (such as the installation of safety and protection fence) so that nobody can enter the area within the robot's movable range. When the robot under operation is touched, it may result in death or serious injury. ● Make sure to install the emergency stop circuit so that the unit can be stopped immediately in an emergency during the unit operation. ● Take the safety measure not to start up the unit only with the power turning ON. Failure to do so may start up the machine suddenly and cause an injury or damage to the product. ● Take the safety measure not to start up the machine only with the emergency stop cancellation or recovery after the power failure. Failure to do so may result in an electric shock or injury due to unexpected power input. ● When the installation or adjustment operation is to be performed, give clear warnings such as "Under Operation; Do not turn ON the power!" etc. Sudden power input may cause an electric shock or injury. ● Take the measure so that the work part is not dropped in power failure or emergency stop. ● Wear protection gloves, goggle or safety shoes, as necessary, to secure safety. ● Do not insert a finger or object in the openings in the product. Failure to do so may cause an injury, electric shock, damage to the product or fire. ● When releasing the brake on a vertically oriented actuator, exercise precaution not to pinch your hand or damage the work parts with the actuator dropped by gravity.
5	Teaching	● When the work is carried out with 2 or more persons, make it clear who is to be the leader and who to be the follower(s) and communicate well with each other to ensure the safety of the workers. ● Perform the teaching operation from outside the safety protection fence, if possible. In the case that the operation is to be performed unavoidably inside the safety protection fence, prepare the "Stipulations for the Operation" and make sure that all the workers acknowledge and understand them well. ● When the operation is to be performed inside the safety protection fence, the worker should have an emergency stop switch at hand with him so that the unit can be stopped any time in an emergency. ● When the operation is to be performed inside the safety protection fence, in addition to the workers, arrange a watchman so that the machine can be stopped any time in an emergency. Also, keep watch on the operation so that any third person can not operate the switches carelessly. ● Place a sign "Under Operation" at the position easy to see. ● When releasing the brake on a vertically oriented actuator, exercise precaution not to pinch your hand or damage the work parts with the actuator dropped by gravity. * Safety protection Fence : In the case that there is no safety protection fence, the movable range should be indicated.

No.	Operation Description	Description
6	Trial Operation	● When the work is carried out with 2 or more persons, make it clear who is to be the leader and who to be the follower(s) and communicate well with each other to ensure the safety of the workers. ● After the teaching or programming operation, perform the check operation one step by one step and then shift to the automatic operation. ● When the check operation is to be performed inside the safety protection fence, perform the check operation using the previously specified work procedure like the teaching operation. ● Make sure to perform the programmed operation check at the safety speed. Failure to do so may result in an accident due to unexpected motion caused by a program error, etc. ● Do not touch the terminal block or any of the various setting switches in the power ON mode. Failure to do so may result in an electric shock or malfunction.
7	Automatic Operation	● Check before starting the automatic operation or rebooting after operation stop that there is nobody in the safety protection fence. ● Before starting automatic operation, make sure that all peripheral equipment is in an automatic-operation-ready state and there is no alarm indication. ● Make sure to operate automatic operation start from outside of the safety protection fence. ● In the case that there is any abnormal heating, smoke, offensive smell, or abnormal noise in the product, immediately stop the machine and turn OFF the power switch. Failure to do so may result in a fire or damage to the product. ● When a power failure occurs, turn OFF the power switch. Failure to do so may cause an injury or damage to the product, due to a sudden motion of the product in the recovery operation from the power failure.

No.	Operation Description	Description
8	Maintenance and Inspection	● When the work is carried out with 2 or more persons, make it clear who is to be the leader and who to be the follower(s) and communicate well with each other to ensure the safety of the workers. ● Perform the work out of the safety protection fence, if possible. In the case that the operation is to be performed unavoidably inside the safety protection fence, prepare the “Stipulations for the Operation” and make sure that all the workers acknowledge and understand them well. ● When the work is to be performed inside the safety protection fence, basically turn OFF the power switch. ● When the operation is to be performed inside the safety protection fence, the worker should have an emergency stop switch at hand with him so that the unit can be stopped any time in an emergency. ● When the operation is to be performed inside the safety protection fence, in addition to the workers, arrange a watchman so that the machine can be stopped any time in an emergency. Also, keep watch on the operation so that any third person can not operate the switches carelessly. ● Place a sign “Under Operation” at the position easy to see. ● For the grease for the guide or ball screw, use appropriate grease according to the Instruction Manual for each model. ● Do not perform the dielectric strength test. Failure to do so may result in a damage to the product. ● When releasing the brake on a vertically oriented actuator, exercise precaution not to pinch your hand or damage the work parts with the actuator dropped by gravity. ● The slider or rod may get misaligned OFF the stop position if the servo is turned OFF. Be careful not to get injured or damaged due to an unnecessary operation. ● Pay attention not to lose the cover or untightened screws, and make sure to put the product back to the original condition after maintenance and inspection works. Use in incomplete condition may cause damage to the product or an injury. * Safety protection Fence : In the case that there is no safety protection fence, the movable range should be indicated.
9	Modification and Dismantle	● Do not modify, disassemble, assemble or use of maintenance parts not specified based at your own discretion.
10	Disposal	● When the product becomes no longer usable or necessary, dispose of it properly as an industrial waste. ● When removing the actuator for disposal, pay attention to drop of components when detaching screws. ● Do not put the product in a fire when disposing of it. The product may burst or generate toxic gases.
11	Other	● Do not come close to the product or the harnesses if you are a person who requires a support of medical devices such as a pacemaker. Doing so may affect the performance of your medical device. ● See Overseas Specifications Compliance Manual to check whether complies if necessary. ● For the handling of actuators and controllers, follow the dedicated instruction manual of each unit to ensure the safety.

Alert Indication

The safety precautions are divided into “Danger”, “Warning”, “Caution” and “Notice” according to the warning level, as follows, and described in the Instruction Manual for each model.

Level	Degree of Danger and Damage	Symbol
Danger	This indicates an imminently hazardous situation which, if the product is not handled correctly, will result in death or serious injury.	Danger
Warning	This indicates a potentially hazardous situation which, if the product is not handled correctly, could result in death or serious injury.	Warning
Caution	This indicates a potentially hazardous situation which, if the product is not handled correctly, may result in minor injury or property damage.	Caution
Notice	This indicates lower possibility for the injury, but should be kept to use this product properly.	Notice

Guideline for Control Method

ERC3 has numerous operation patterns and options to meet many criteria for different applications. Check Chapter 4 Operation for more details.
When Quick Teach is used with Con mode only Jog Operation is available.

Codes in brackets are model codes

No.	Type of Operation	Controller		Compulsory Option	Overview
		I/O Type	Controller Type		
1	Positioner Mode 1 (Standard Type)	PIO Type (NP/PN)	CON Mode (CN)	–	• Select from 3 types of PIO patterns for the operation method • Number of maximum positioning points: 16 points
2	Pulse Train Control Mode	Pulse Train Control Type (PLN/PLP) (Note 1)	CON Mode (CN)	–	• An operation by pulse train input is available. • There are 2 types of operation methods (Positioning/Pressing)
				Pulse Converter AK-04	• Applicable for open collector pulse train output • There are 2 types of operation methods (Positioning/Pressing)
3	Positioner Mode 2 (Expansion Type)	SIO Type (SE)	CON Mode (CN)	PIO Converter	• Select from 6 types of PIO patterns for the operation method • Number of maximum positioning points: 512 points • Capable for Simple Absolute Type application
4	MEC Mode 1	PIO Type (NP/PN)	MEC Mode (MC)	(Quick Teach) (Note 2)	• The same control as air cylinder is available • Simple operation is available with Quick Teach (teaching pendant) • There are 2 types of operation patterns (2-Point Positioning/3-Point Positioning)
5	MEC Mode 2	SIO Type (SE)	MEC Mode (MC)	PIO Converter (Quick Teach) (Note 2)	• The same control as air cylinder is available • Simple operation is available with Quick Teach (teaching pendant) • There are 2 types of operation patterns (2-Point Positioning/3-Point Positioning) • Capable for Simple Absolute Type application
6	MEC Mode 3	SIO Type (SE)	MEC Mode (MC)	Quick Teach	• Individual operation is available by Quick Teach • There are 2 types of operation patterns (2-Point Positioning/3-Point Positioning)

Note 1 The pulse train input is the differential input (Line Driver) type. For PLN, PIO is NPN type and PLP is PNP type.
Note 2 It is also available to use any teaching tool other than Quick Teach.

⚠ Caution : The selection of the controller type is determined by the selection of the model code. The type of built-in controller differs for each type. Since the hardware is different, it is not possible to select the type with parameters after the product is delivered out.

Precautions in Operation

1. It is set to “high output” when the machine is delivered from the factory.
   There is a limit in the duty for the high output setting. Even though the transportable weight and maximum speed decrease, an operation with the duty 100% becomes available if the high output setting is set invalid in the parameters.
   See 1.2.1 Settings for Valid/Invalid of High Output Setting for more details.

2. Set the operation patterns.
   There are some operation (PIO) patterns prepared for each model classified by the built-in controller.
   Set the operation pattern and parameters suitable for the operation method of each model.
   See Chapter 4 Operation for more details.

> ⚠ Caution : Please note it is very risky when the control sequence and PIO pattern setting do not match to each other. It may not only cause the normal operation disabled, but also may cause an unexpected operation.

3. Do not set speeds and accelerations/decelerations equal to or greater than the respective ratings.
   If the actuator is operated at a speed or acceleration/deceleration exceeding the allowable value, abnormal noise or vibration, failure, or shorter life may result.

4. The allowable load moment for the slider type should be within the allowable range.
   If the actuator is operated under a load equal to or greater than the allowable load moment, abnormal noise or vibration, failure, or shorter life may result. In an extreme case, flaking may occur.

5. The overhung for the slider type should be within the allowable range.
   Attaching a load beyond the allowable overhang length may generate vibration or abnormal noise.

6. Do not attempt to apply a rotary torque the rod type.
   Doing so may damage the internal component such as the rod stopper, and may result in an operation failure.

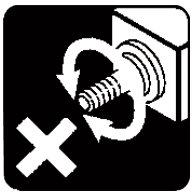

7. Back and forth operation in short distance may wear out the oil film of the grease.
   If the actuator is moved back and forth continuously over a short distance of 30 mm or less, grease film may run out. As a guide, move the actuator back and forth repeatedly for around 5 cycles over a distance of 50 mm or more after every 5,000 to 10,000 cycles. Keep using the actuator with the grease worn out may cause malfunction. If it is extreme, flaking may occur on the guide.

8. Do not attempt to hit the slider or rod against an obstacle with high speed.
   It may destroy the coupling.

9. Make sure to attach the actuator properly by following this instruction manual.
   Using the product with the actuator not being certainly retained or affixed may cause abnormal noise, vibration, malfunction or shorten the product life.

10. Make sure to follow the usage condition, environment and specification range of the product.
    Operation out of the guarantee could cause a drop in performance or malfunction of the product.

11. Use the dedicated teaching tool.
    Check 1.1.2 Teaching Tool for the PC software and teaching pendant available for this controller.

12. Do not connect Quick Teach while a tool (teaching) is being connected to the 8-pin mini DIN connector on the ERC3 main unit.
    Communication between ERC3 and the tool (teaching or PC) becomes unable.

13. Do not connect Quick Teach while a tool is being connected to TP connector (8-pin mini DIN) on ERC3 side.
    Since the communication with Quick Teach cannot be established, ERC3 cannot receive the high-output invalid command and runs with the high-output setting condition, resulting in a generation of the voltage drop error due to the capacity drop of the power supply unit inside Quick Teach.

14. Backup the data to secure for breakdown.
    A non-volatile memory is used as the backup memory for this controller. All the registered position data and parameters are written into this memory and backed-up at the same time. Therefore, you will not usually lose the data even if the power is shut down. However, make sure to save the latest data so a quick recovery action can be taken in case when the controller is broken and needs to be replaced with another one.

    How to Save Data
    (1) Save the data to CD-R or hard disk with using the PC software
    (2) Hard-copy the information of position tables and parameters on paper

15. Clock Setting in Calendar Function
    When power is supplied to the PIO converter for the first time, “Error Code 069 Real Time Clock Vibration Stop Detected” May get generated. In the case this happens, set the current time with a teaching tool.
    If the battery is fully charged, the clock data is retained for approximately 10 days after the power is turned OFF. Even though the time setting is conducted before the product is shipped out, the battery is not fully charged. Therefore, there may be a case that the clock data is lost even with fewer days than described above passed since the product is shipped out.

16. Pulse Train Control Type cannot be operated with the serial communication.
    It is able, however, to monitor the current position or the conditions of the status.

17. When using Pulse Train Control type, pay close attention to the pulse frequency; so the frequency will no exceed the actuator specification.
In the pulse train control, the acceleration/deceleration speed is also controlled by the change of the command pulse frequency from the host controller. Be careful not to exceed the maximum acceleration/deceleration speed of the actuator. The use of the actuator with excessive acceleration/deceleration rate may cause a malfunction.

18. For CON Mode Type, an operation cannot be made unless the servo-on signal and pause signal are input.

(1) Servo ON Signal SON
Servo-on signal SON is selectable from either “Enable” or “Disable” by the parameter.
This setting can be performed in Parameter No.21 “Servo ON input disable selection”.
[Refer to Chapter 7 Parameters.]
If it is set to “Enable”, the actuator would not operate unless turning this signal ON.
If parameter No.21 is set to “1”, SON is made disable. If it is set to “Disable”, the servo becomes ON and the actuator operation becomes enabled as soon as the power supply to the controller is turned ON and the emergency stop signal is cancelled.
The factory setting is “0” (Enable). Have the setting that suits the desired control logic.

(2) Pause Signal *STP
The input signal of the pause signal *STP is always ON considering the safety. Therefore, in general, the actuator would not operate if this signal is not ON.
It is available to make this signal to “Disable”, if this signal is undesirable.
It is settable by parameter No.15 “Pause input disable”.
[Refer to Chapter 7 Parameters.]
If parameter No.15 is set to “1” (Disable), the actuator can operate even if this signal is not ON.
This parameter is set to “0” (Enable) at delivery.

19. Transference of PIO Signal between Controllers

Please note the following when conducting transference of PIO signal between controllers.
To certainly transfer the signal between controllers with different scan time, it is necessary to have longer scan time than the one longer than the other controller. To ensure to end the process safely, it is recommended to have the timer setting more than twice as long as the longer scan time at least.

● Operation Image

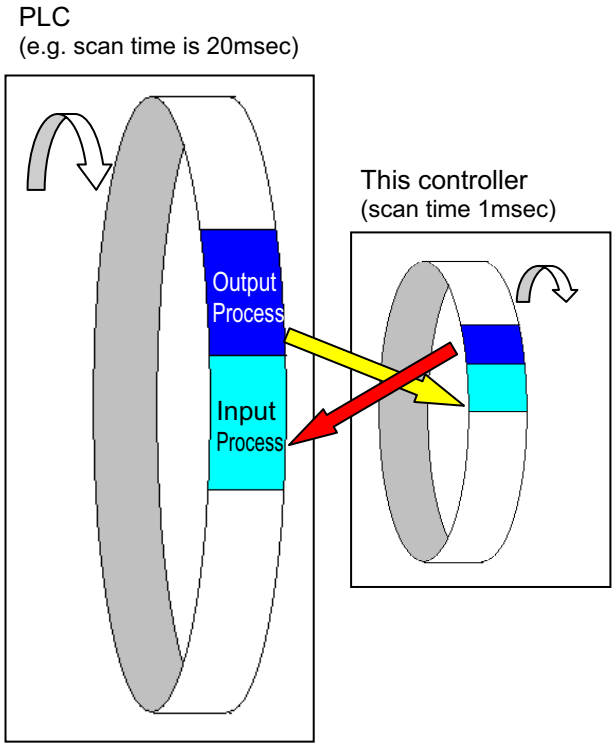

As shown in the diagram, the input and output timings of two devices that have different scan time do not match, of course, when transferring a signal.
There is no guarantee that PLC would read the signal as soon as this controller signal turns on. In such a case, make the setting to read the signal after a certain time that is longer than the longer scan time to ensure the reading process to succeed on the PLC side.
It is the same in the case this controller side reads the signal.
In such a case, it is recommended to ensure 2 to 4 times of the scan time for the timer setting margin.
It is risky to have the setting below the scan time since the timer is also processed in the scan process.
In the diagram, PLC can only read the input once in 20msec even though this controller output once in 1msec.
Because PLC only conducts output process once in 20msec, this controller identifies the same output status for that while.

Also, if one tries to read the signal that is being re-written by the other, the signal may be read wrongly. Make sure to read the signal after the rewriting is complete. (It is recommended to have more than 2 scan periods to wait.) Make sure not to have the output side to change the output until the other side completes the reading. Also, a setting is made on the input area not to receive the signal less than a certain time to prevent a wrong reading of noise. This duration also needs to be considered.

20. PLC Timer Setting

Do not have the PLC timer setting to be done with the minimum setting.
Setting to “1” for 100msec timer turns ON at the timing from 0 to 100msec while 10msec timer from 0 to 10msec for some PLC.
Therefore, the same process as when the timer is not set is held and may cause a failure such as the actuator cannot get positioned to the indicated position number in Positioner Mode.
Set “2” as the minimum value for the setting of 10msec timer and when setting to 100msec, use 10msec timer and set to “10”.

International Standards Compliances

This product complies with the following overseas standard.

RoHS Directive	CE Marking
○	To be scheduled

Names of the Parts

1. Main Body

In this instruction manual, the right and left sides of the actuator is expressed in the way it is placed horizontally and is looked from the motor side as shown in the figure below.

(1) Slider Type

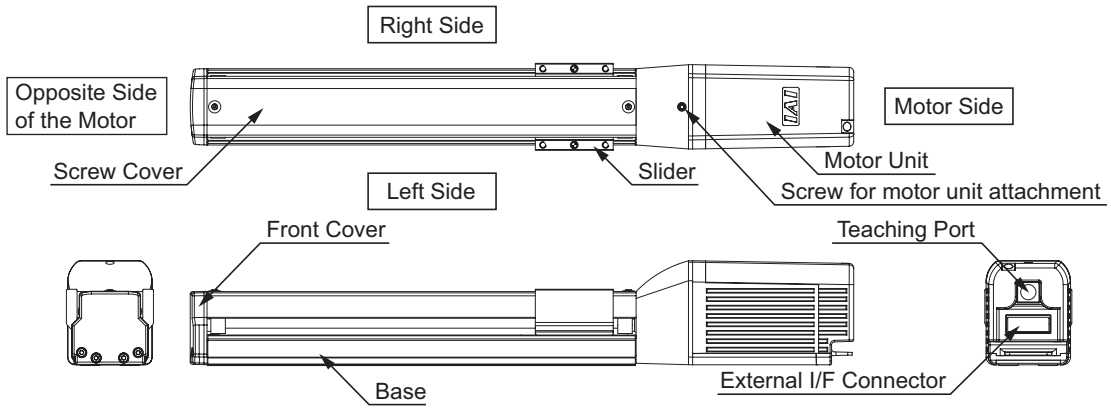

(2) Rod Type

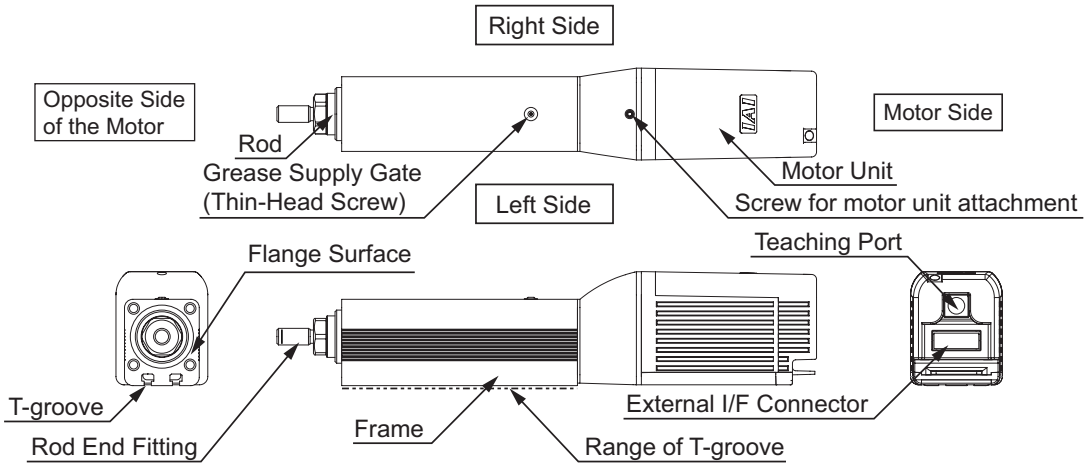

2. Motor Unit

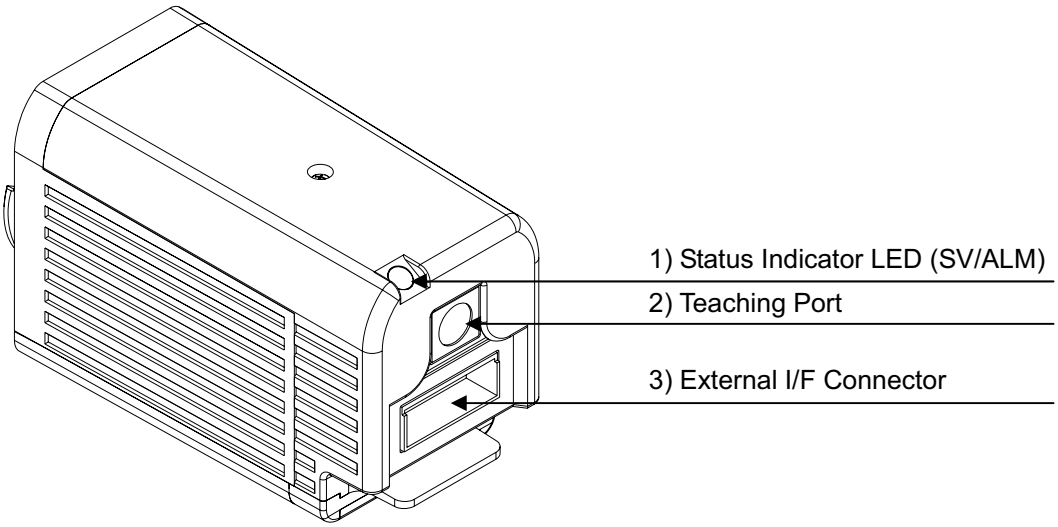

1) Status Indicator LED
Following show the controller operation status:

○ : Illuminating × : OFF ☆ : Flashing

LED		Operation status	Status of PIO Output Signal	
SV (GN)	ALM (RD)		CON Mode Type	MEC Mode Type
			*ALM Output (Note 1)	
×	×	Control Power Supply ON	ON	
		Control Power Supply OFF	OFF	
		Servo OFF	OFF	
×	○	Motor driving power supply OFF	OFF	
		Emergency Stop	OFF	
		Alarm (Operation cancellation level or more)	OFF	
○	×	Servo ON	ON	
☆	×	During automatic servo-off	ON	
○ (OR)		In initializing process at power being ON	OFF	

Note 1 The output signals with * mark are the active low signals that turn ON in normal condition and turn OFF while in abnormal condition.

2) Teaching Port
It is the connector dedicated for the connection of a teaching tool such as PC software.

3) External I/F Connector
It is I/F connector for controls with PIO and SIO.

3. Option

(1) PIO Converter (Model: RCB-CV/CVG-**)

The functions of CON mode type in ERC3 can be extended. See 4.2.3 Operation in Positioner Mode 2 for details.

Also, if ERC3 is Simple Absolute Type, the absolute battery is to be attached to this PIO Converter, thus it is mandatory.

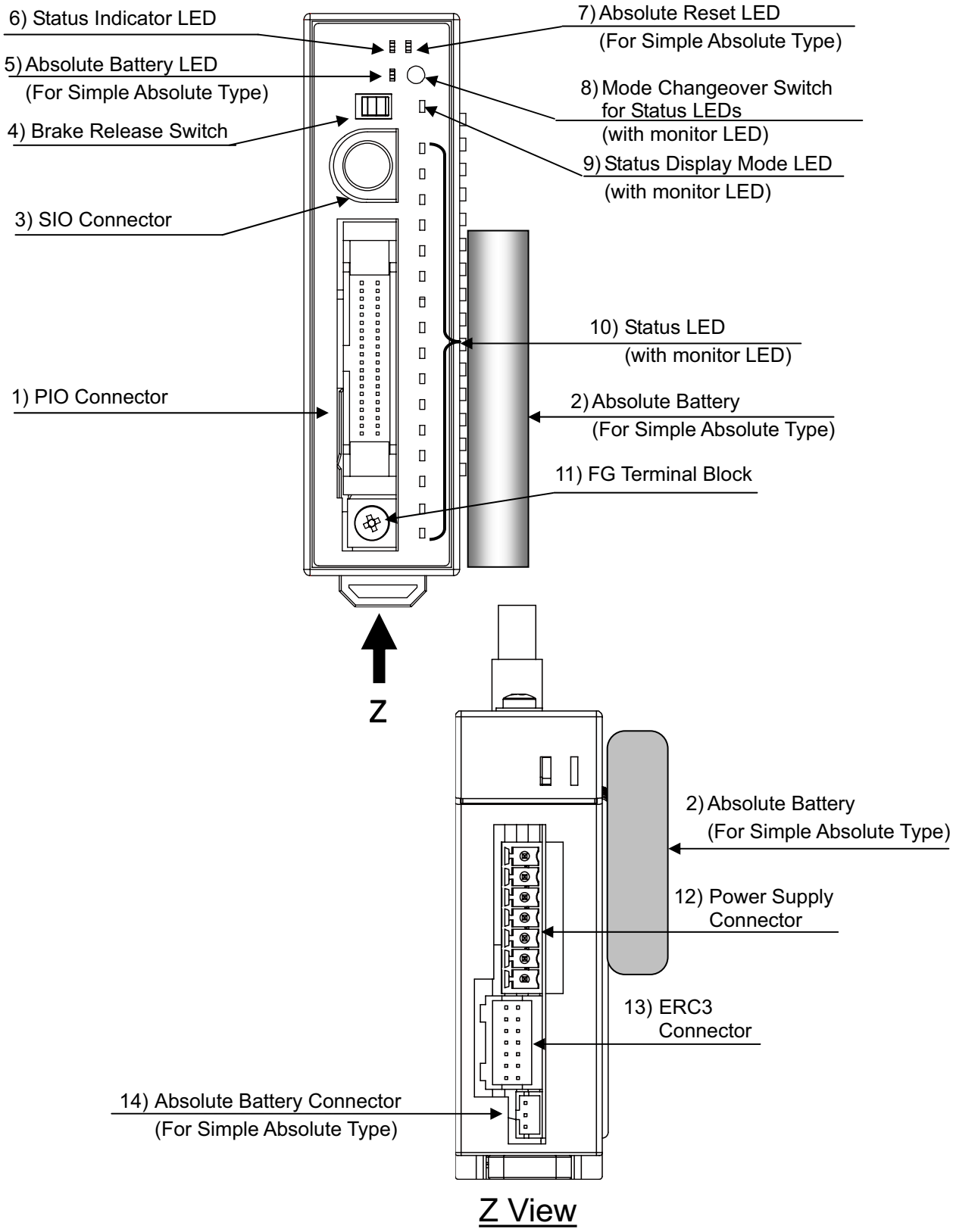

1) PIO Connector (I/O) [Refer to 3.2.2 [2]]
The PIO connector is used for control I/O signals.

2) Absolute Battery [Refer to Chapter 6]
This is the battery to retain the encoder information for Simple Absolute Type. Affix it with fabric hook-and-loop fastener on the side of PIO Converter.
If ERC3 is Simple Absolute Type, it is necessary that PIO Converter is a type that is applicable for Simple Absolute Type.

3) SIO Connector (SIO) [Refer to 3.7.6]
This is the connector for the communication cable connection with a teaching tool such as the PC software.

4) Brake Release Switch (RLS/NOM)
For the actuator equipped with a brake, the switch is used to release the brake forcibly.
RLS ·····Brake release
NOM·····Normal Operation (brake is activated)

> ⚠ Warning : Always set the switch to “NOM” in normal operation.
> (Keep the chance to set the switch to RLS side as less as possible, and make sure to set it on NOM side in ordinary use.)
> The brake would not work even with the servo OFF condition if the switch is on the RLS side. In the vertical oriented mount, the work may drop and cause an injury or the work to be damaged.

5) Absolute Battery LED (BAT)
It shows the absolute reset status, complete or incomplete.
It is equipped if applicable for Simple Absolute Type.

LED	Operation Status
OFF	Control Power Supply OFF
Green Light is turned ON.	Battery Fully Charged
Orange Light is turned ON.	Battery Charging Operation
Red Light is turned ON.	Battery Disconnected

6) Status Indicator LED (SYS)
Following show the controller operation status:

○ : Illuminating × : OFF ☆ : Flashing

LED		Operation status	Status of PIO Output Signal			
			CON Mode Type			MEC Mode Type
SV (GN)	ALM (RD)		SV Output (Servo ON)	*ALM Output (Note 1) (Alarm)	*EMGS Output (Note 1)(Note2) (Emergency Stop Status)	*ALM Output (Note 1)
×	×	Control Power Supply ON	OFF	ON	ON	ON
		Control Power Supply OFF	OFF	OFF	OFF	OFF
		Servo OFF	OFF	OFF	–	OFF
×	○	Motor driving power supply OFF	OFF	OFF	–	OFF
		Emergency Stop	OFF	OFF	OFF	OFF
		Alarm (Operation cancellation level or more)	OFF	OFF	–	OFF
○	×	Servo ON	ON	ON	ON	ON
☆	×	During automatic servo-off (Note 3)	OFF	ON	–	ON
○ (OR)		In initializing process at power being ON	OFF	OFF	–	OFF

Note 1 The output signals with * mark are the active low signals that turn ON in normal condition and turn OFF while in abnormal condition.
Note 2 *EMGS output is not prepared for Pulse Train Control Type.
Note 3 Servo-motor Auto OFF [Refer to Chapter 5 Power-saving Function]

7) Absolute Reset LED (ABS)
It shows the absolute reset status, complete or incomplete.
It is to be mounted to Simple Absolute Type.

LED	Operation Status
OFF	Control Power Supply OFF
Green Light is turned ON.	Absolute Reset Complete
Red Light is turned ON.	Absolute Reset Incomplete

8) Mode Changeover Switch for Status LEDs (SCT)
The display modes (0 to 3) of LED 0 to 15 switch over every time the switch is pressed and the contents of display can be changed. The selection of the mode can be checked with the color of Status Display Mode LED.

9) Status Display Mode LED (SYS)
The mode selected with Status LED Mode Changeover Switch is expressed with the display colors.

LED	Mode	Contents of LED 0 to 15 Displays
OFF	Mode 0	Command Current Ratio Level/ Control Power Supply OFF
Green Light is turned ON.	Mode 1	Alarm Code
Yellow Light is turned ON.	Mode 2	Monitoring of PIO input signal
Red Light is turned ON.	Mode 3	Monitoring of PIO output signal

10) Status LED (0 to 15)

- Display while Mode 0 (Command Current Ratio Level) being selected
  The command current ratio level of the motor rated current as 100% is displayed in a bar graph with green lights.

○: LED Illuminating, × : LED OFF

Status of LEDs																	
15	×	×	×	×	×	×	×	×	×	×	×	×	×	×	×	×	○
14	×	×	×	×	×	×	×	×	×	×	×	×	×	×	×	○	○
13	×	×	×	×	×	×	×	×	×	×	×	×	×	×	○	○	○
12	×	×	×	×	×	×	×	×	×	×	×	×	×	○	○	○	○
11	×	×	×	×	×	×	×	×	×	×	×	×	○	○	○	○	○
10	×	×	×	×	×	×	×	×	×	×	×	○	○	○	○	○	○
9	×	×	×	×	×	×	×	×	×	×	○	○	○	○	○	○	○
8	×	×	×	×	×	×	×	×	×	○	○	○	○	○	○	○	○
7	×	×	×	×	×	×	×	×	○	○	○	○	○	○	○	○	○
6	×	×	×	×	×	×	×	○	○	○	○	○	○	○	○	○	○
5	×	×	×	×	×	×	○	○	○	○	○	○	○	○	○	○	○
4	×	×	×	×	×	○	○	○	○	○	○	○	○	○	○	○	○
3	×	×	×	×	○	○	○	○	○	○	○	○	○	○	○	○	○
2	×	×	×	○	○	○	○	○	○	○	○	○	○	○	○	○	○
1	×	×	○	○	○	○	○	○	○	○	○	○	○	○	○	○	○
0	×	○	○	○	○	○	○	○	○	○	○	○	○	○	○	○	○
Command Current Ratio [%]	0	to 6.24	to 12.24	to 18.74	to 24.99	to 31.24	to 37.49	to 43.74	to 49.99	to 56.24	to 62.49	to 68.74	to 74.99	to 81.24	to 87.49	to 93.74	to 100.00

- Display while Mode 1 (Alarm Code) being selected [refer to Chapter 7 for Alarm Codes]
  The alarm code issued in ERC3 is displayed in the hexadecimal system with the LED 0 to 15 used as 1 word of bit 0 to 15.
  (Example) If Alarm Code “083” (absolute position movement command at home-return incomplete) is generated, the display is as shown below:

○: LED Illuminating, × : LED OFF

LED	15	14	13	12	11	10	9	8	7	6	5	4	3	2	1	0
Alarm Display	×	×	×	×	×	×	×	×	○	×	×	×	×	×	○	○
Alarm Code	0				0				8				3			

- Display while Mode 2 (PIO Input Signal Monitor) being selected
  It displays the status of PIO control input (PLC → PIO Converter) whether it is ON or OFF. [Refer to 2.1 [2]]

  LED turned ON in green : input signal ON
  LED being OFF : input signal OFF

- Display while Mode 2 (PIO Output Signal Monitor) being selected
  It displays the status of PIO control input (PIO Converter → PLC) whether it is ON or OFF. [Refer to 2.1 [2]]

  LED turned ON in green : output signal ON
  LED being OFF : output signal OFF

11) FG Terminal Block [Refer to 2.3.4 [1] (2)]
    This is the grounding terminal for protection from electric shock and noise. Make sure to conduct the Class D grounding (formerly Class 3 grounding: grounding resistance at 100 or less).

12) Power Supply Connector [Refer to 3.3.3 [1], 3.5.3 [1]]
    This is the connector for the connections of power supply, emergency stop input, driving cutoff and the emergency stop switch signal output for the teaching pendant.

13) ERC3 Connector [Refer to 3.3.3 [2], 3.5.3 [2]]
    This is the connector for the relay cable to connect ERC3 and PIO Converter.

14) Absolute Battery Connector [Refer to Chapter 6]
    It is the connector to plug in the enclosed battery if applicable for Simple Absolute Type.

(2) Quick Teach (Model: RCM-PST-**)

You can operate ERC3 easily. Not only JOG operation and home-return operation, but also the settings and changes of stop positions (2 or 3 points), acceleration/deceleration, speed and try run (forward / backward / continuous operations) are available.

Check Chapter 4 Operation for the functions of each LED and operation switch.

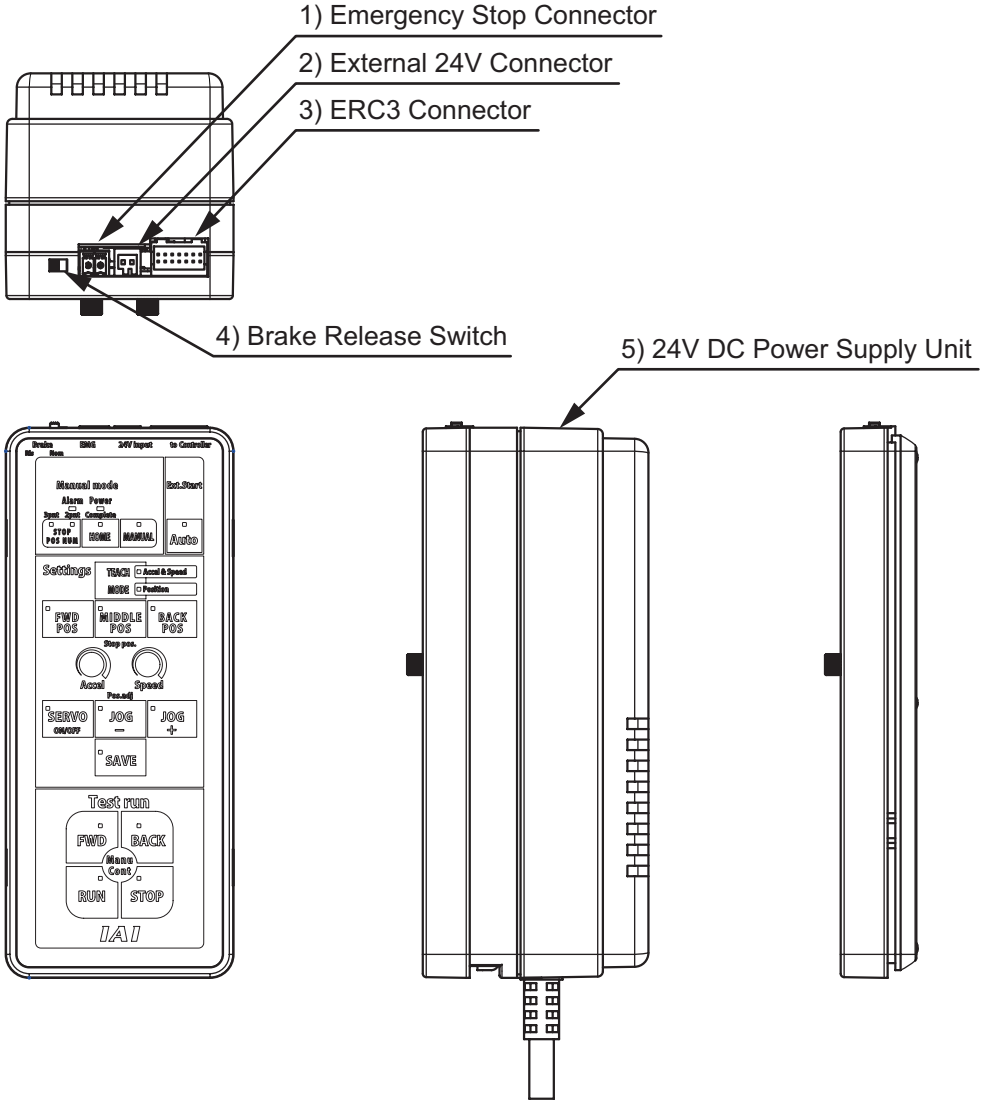

With 24V DC Power Supply Unit
Model: RCM-PST-1
RCM-PST-2
RCM-PST-EU

24V Power Supply Type
Model: RCM-PST-0

1) Emergency Stop Connector [Refer to Chapter 2]
This is the input connector for the external emergency stop signals. There is a plug equipped with a jumper cable attached on at the delivery. Remove the jumper when a wiring for the external emergency stop is required. Connect a signal that turns ON in normal condition and OFF when in abnormal for the external emergency stop signal.

2) External 24V Connector
Use this connector to supply power when it is not equipped with 24V DC power supply unit or is to be used without the power supply unit being attached.
Power Supply 24V DC ±10% 2.5A or more
When the excitation detection is operating after the power is turned ON (normally for 100ms) MAX. 2.5A

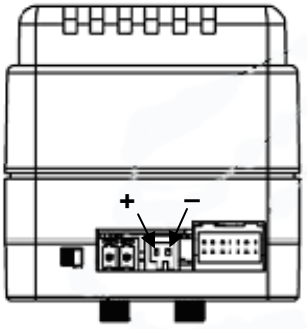

3) ERC3 Connector
When operating ERC3 directly with Quick Teach, plug the SIO type power supply and I/O cable.
When Quick Teach is used as the teaching pendant, plug the SIO communication cable.

Power for SIO Type • I/O Cable : Model CB-ERC3S-PWBIO□□□
(□□□ shows the cable length, Example 020 = 2m, MAX. 10m)
SIO Communication Cable : Model CB-PST-SIO050 (Standard 5m)

4) Brake Release Switch
This is a switch to compulsorily release the brake of the actuator equipped with a brake.
Release·····Brake release
Normal·····Normal Operation (brake is activated)

⚠ Warning : Always set the switch to “Normal” in normal operation.
(Keep the chance to set the switch to release side as less as possible, and make sure to set it on normal side in ordinary use.)
The brake would not work even with the servo OFF condition if the switch is on the release side. In the vertical oriented mount, the work may drop and cause an injury or the work to be damaged.

5) 24V DC Power Supply Unit
This is a 24V DC power supply unit to provide power to Quick Teach from AC power source. This can be used with being detached. It is necessary to provide power from external 24V connector when it is detached.

Quick Teach Model	Power Voltage	Rated Current	Peak Current	Remarks
RCM-PST-1 (100V Type)	Single-phase 100 to 115V AC ±10%	2.5A	3.2A	Cable 2m Equipped with 3-pin power socket plug
RCM-PST-2 (200V Type)	Single-phase 100 to 230V AC ±10%	2.1A		Cable 2m Equipped with ϕ4.3-hole solderless ring tongue terminals
RCM-PST-EU (200V type for Europe)	Single-phase 100 to 230V AC ±10%	2.1A		

Actuator Coordinate

The coordinate system of ERC3 is as shown below.
0 defines the home position, and items in ( ) are for the home-reversed type (option).
For MEC Mode, the home position is the origin point and positive side is the end point.

(1) Rod Type

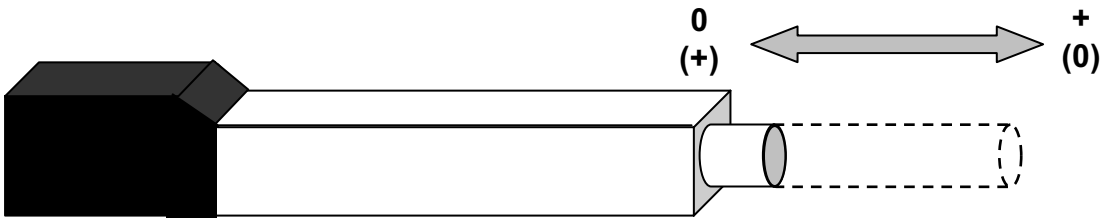

(2) Slider Type

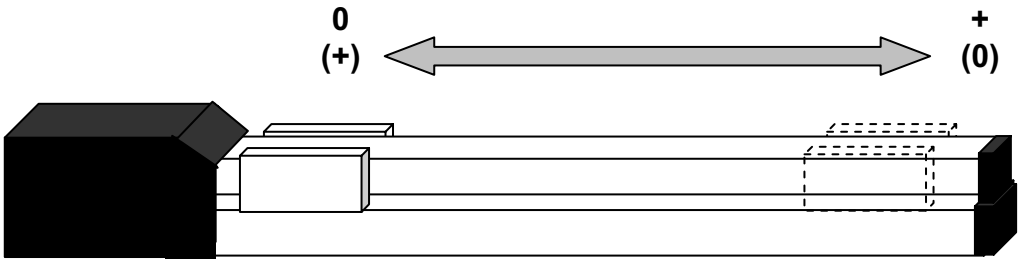

Starting Procedures

1. Positioner Mode 1

When using this product for the first time, make sure to avoid mistakes and incorrect wiring by referring to the procedure below. “PC” stated in this section means “RC PC software”.

Check of Packed Items
Are there all the delivered items?

No → Contact us or our distributor.

↓ Yes

Installation and Wiring [Refer to Chapter 2 and Chapter 3]
Perform the installation of and wiring for the actuator.

→ **Point Check Item [Refer to Section 2.3.4]**
- Is frame ground (FG) connected?
- Has the noise countermeasure been taken?

← Yes

↓

Power Supply and Alarm Check
Connect a teaching tool such as PC, turn the power ON for unit.
Select [Teaching Mode 1 Safety Speed Activated / PIO Operation Invalid] in the teaching tool such as PC.

→ **Check Item**
Is the red light [ALM] on the LED status display OFF?

No → Connect the teaching tool such as PC to confirm the content of alarm and have an appropriate treatment.

↓ Yes

PIO Pattern Settings
Set the PIO pattern used to Parameter No.25.

Safety Speed Setting
Set the Parameter No.35 if necessary.
The safety speed is set to 100mm/s at the delivery.

Servo ON
Turn the servo ON with the operation on the teaching tool such as PC.

→ **Check Item**
Does the status LED [SV] on the panel?

No → If an alarm is generated, connect the PC or teaching pendant and check the content of the alarm to have the right treatment.

↓ Yes

⚠ Caution
Please perform this process with the actuator away from the mechanical end or interfering subjects as much as possible. Put the actuator away if it interferes with surroundings. It may generate an alarm if the actuator hit the mechanical end or interfering subjects when the servo is turned ON.
The slider may get slightly dropped by self-weight if servo ON and OFF is repeatedly performed at the same position. Be careful not to pinch the hand or damage the work.

Safety Circuit Check
Does the emergency stop circuit (drive cutoff circuit) work properly and turn the servo OFF?

No → Check the emergency stop circuit.

↓ Yes

Target Position Setting
Set the target position in “Position” Box in each position table.
Perform a home-return operation first when Direct Teaching is to be performed. When moving the actuator manually with hand, supply +24V to BK in PIO to release the brake before doing so. Put the switch back after the setting is complete.

⚠ Warning Be careful not to pinch fingers or damage the work with the dropped actuator when releasing the brake in vertical orientation.

↓

Test Run Adjustment 1
Check the operation without mounting a work and set the safety speed invalid on the teaching tool such as PC, and then check the operation with a work mounted.

→ **Check Item**
Any vibration or abnormal noise?

No → Check if there is any problem with the installation of the actuator and the condition of the actuator use exceeds the ranges of the rated values.
Adjust the servo if necessary.

⚠ Caution To ensure safety, it is recommended that safety speed be enabled during initial movements.

↓ Yes

Test Run Adjustment 2
1) Set Teach Mode to Monitor Mode 2 and disconnect the teaching tool.
2) Output the operation command from PLC to the controller and check the system operation.

2. Pulse Train Control Mode

This product allows positioning control by the pulse train.
It is necessary to have the positioning control function able to output the pulse train on the host controller (PLC).
When using this product for the first time, make sure to avoid mistakes and incorrect wiring by referring to the procedure below. “PC” stated in this section means “RC PC software”.

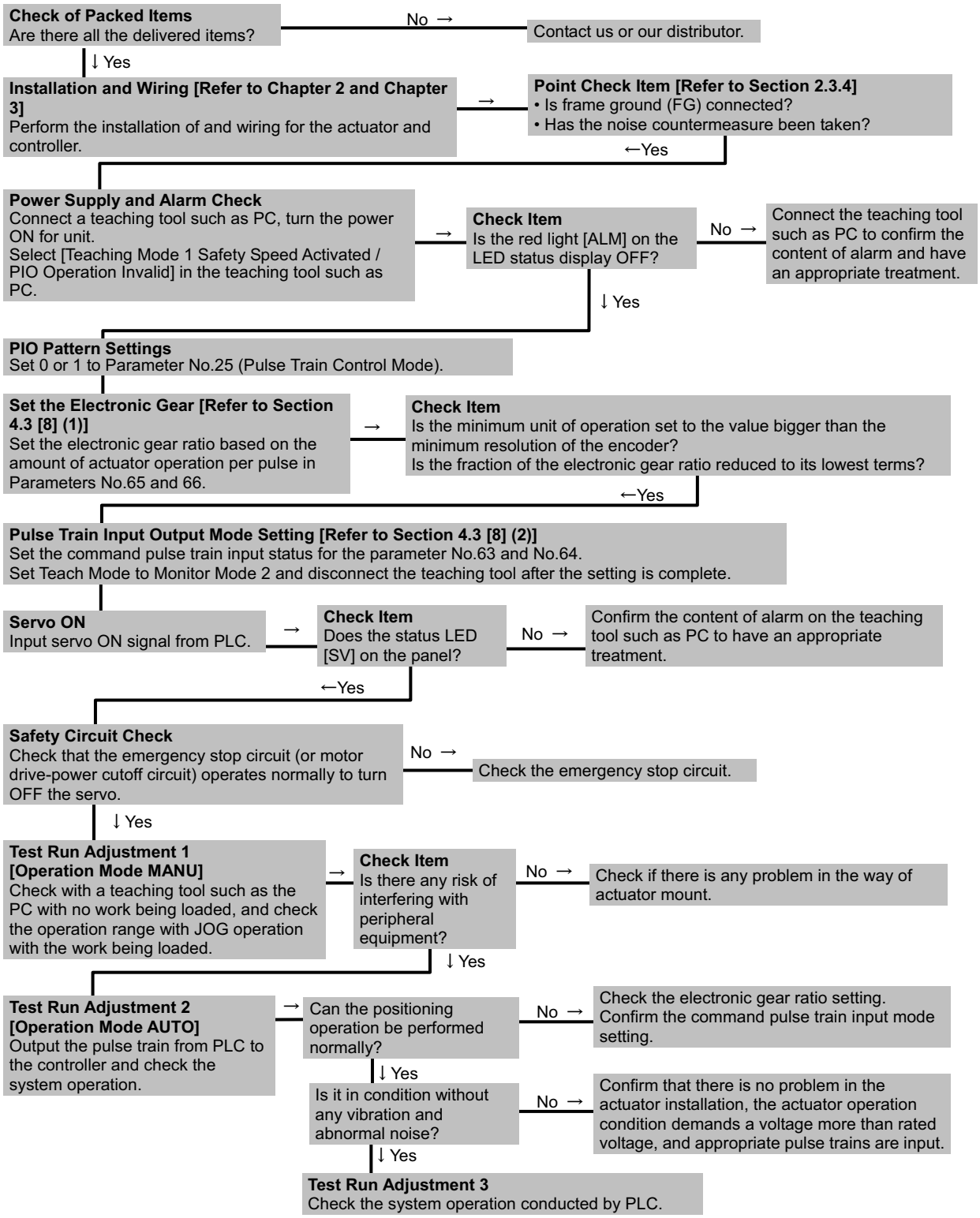

3. Positioner Mode 2

When using this product for the first time, make sure to avoid mistakes and incorrect wiring by referring to the procedure below. “PC” stated in this section means “RC PC software”.

Check of Packed Items
Are there all the delivered items?

No → Contact us or our distributor.

↓ Yes

Installation and Wiring [Refer to Chapter 2 and Chapter 3]
Perform the installation of and wiring for the actuator.

→ **Point Check Item [Refer to Section 2.3.4]**
- Is frame ground (FG) connected?
- Has the noise countermeasure been taken?

← Yes

↓

Power Supply and Alarm Check
Connect a teaching tool such as PC, turn the power ON for unit.
Select [Teaching Mode 1 Safety Speed Activated / PIO Operation Invalid] in the teaching tool such as PC.

→ **Check Item**
Is the red light [ALM] on the LED status display OFF?

No → Connect the teaching tool such as PC to confirm the content of alarm and have an appropriate treatment.

↓ Yes

PIO Pattern Settings
Set the PIO pattern used to Parameter No.25.

Safety Speed Setting
Set the Parameter No.35 if necessary.
The safety speed is set to 100mm/s at the delivery.

Servo ON
Turn the servo ON with the operation on the teaching tool such as PC.

→ **Check Item**
Does the status LED [SV] on the panel?

No → If an alarm is generated, connect the PC or teaching pendant and check the content of the alarm to have the right treatment.

↓ Yes

⚠ Caution
Please perform this process with the actuator away from the mechanical end or interfering subjects as much as possible. Put the actuator away if it interferes with surroundings. It may generate an alarm if the actuator hit the mechanical end or interfering subjects when the servo is turned ON.
The slider may get slightly dropped by self-weight if servo ON and OFF is repeatedly performed at the same position. Be careful not to pinch the hand or damage the work.

Safety Circuit Check
Does the emergency stop circuit (drive cutoff circuit) work properly and turn the servo OFF?

No → Check the emergency stop circuit.

↓ Yes

Target Position Setting
Set the target position in “Position” Box in each position table.
Perform a home-return operation first when Direct Teaching is to be performed. When moving the actuator manually, set the Brake Release Switch to [BK RLS] side for the brake equipped type. Put the switch back after the setting is complete.

⚠ Warning In the case the actuator is installed in vertical orientation and put the brake release switch to [BK RLS] side, be careful not to drop it with self-weight and pinch your hand or damage the work.

↓

Test Run Adjustment 1
Check the operation without mounting a work and set the safety speed invalid on the teaching tool such as PC, and then check the operation with a work mounted.

→ **Check Item**
Any vibration or abnormal noise?

No → Check if there is any problem with the installation of the actuator and the condition of the actuator use exceeds the ranges of the rated values.
Adjust the servo if necessary.

⚠ Caution To ensure safety, it is recommended that safety speed be enabled during initial movements.

↓ Yes

Test Run Adjustment 2
1) Set Teach Mode to Monitor Mode 2 and disconnect the teaching tool.
2) Output the operation command from PLC to the controller and check the system operation.

4. MEC Mode 1

When using this product for the first time, make sure to avoid mistakes and incorrect wiring by referring to the procedure below. “PC” stated in this section means “MEC PC software”.

Check of Packed Items
Are there all the delivered items?

No → Contact us or our distributor.

↓ Yes

Installation and Wiring [Refer to Chapter 2 and Chapter 3]
Perform the installation of and wiring for the actuator.

→ **Point Check Item [Refer to Section 2.3.4]**
- Is frame ground (FG) connected?
- Has the noise countermeasure been taken?

← Yes

Power Supply and Alarm Check
Connect a teaching tool such as PC, turn the power ON for unit.

→ **Check Item**
Is the green light [SV] on the LED status display ON?

No → Connect the teaching tool such as PC to confirm the content of alarm and have an appropriate treatment.

↓ Yes

Settings of Initial Setting, Target Position, etc.
Establish the initial settings for such as stop positions (for 2-point stop and 3-point stop), whether to have the pressing operation, etc.
Secondly, set the parameters such as target position, acceleration and deceleration in the operational condition table.
Perform a home-return operation first when Direct Teaching is to be performed.

> ⚠ Warning When installing the product vertically and using Direct Teach, and if servo is turned on/off repeatedly at the same position, the actuator may drop slightly with its weight. Be careful not to pinch the hand or damage the work.

Safety Circuit Check
Does the emergency stop circuit (drive cutoff circuit) work properly and turn the servo OFF?

No → Check the emergency stop circuit.

↓ Yes

Test Run Adjustment 1
Check the operation without mounting a work and set the safety speed invalid on the teaching tool such as PC, and then check the operation with a work mounted.

→ **Check Item**
Any vibration or abnormal noise?

No → Check if there is any problem with the installation of the actuator and the condition of the actuator use exceeds the ranges of the rated values.
Adjust the servo if necessary.

↓ Yes

> ⚠ Caution To ensure safety, it is recommended that safety speed be enabled during initial movements.

Test Run Adjustment 2
Output the operation command from PLC to the controller and check the system operation.

5. MEC Mode 2

When using this product for the first time, make sure to avoid mistakes and incorrect wiring by referring to the procedure below. “PC” stated in this section means “MEC PC software”.

Check of Packed Items
Are there all the delivered items?

No → Contact us or our distributor.

↓ Yes

Installation and Wiring [Refer to Chapter 2 and Chapter 3]
Perform the installation of and wiring for the actuator.

→ **Point Check Item [Refer to Section 2.3.4]**
- Is frame ground (FG) connected?
- Has the noise countermeasure been taken?

← Yes

Power Supply and Alarm Check
Connect a teaching tool such as PC to PIO Converter and turn the power ON.

→ **Check Item**
Is the green [SV] turned ON in the ERC3 and PIO Converter Status Display LEDs?

No → Connect the teaching tool such as PC to confirm the content of alarm and have an appropriate treatment.

↓ Yes

Settings of Initial Setting, Target Position, etc.
Establish the initial settings for such as stop positions (for 2-point stop and 3-point stop), whether to have the pressing operation, etc.
Secondly, set the parameters such as target position, acceleration and deceleration in the operational condition table.
Perform a home-return operation first when Direct Teaching is to be performed.

⚠ Warning When installing the product vertically and using Direct Teach, and if servo is turned on/off repeatedly at the same position, the actuator may drop slightly with its weight. Be careful not to pinch the hand or damage the work.

Safety Circuit Check
Does the emergency stop circuit (drive cutoff circuit) work properly and turn the servo OFF?

No → Check the emergency stop circuit.

↓ Yes

Test Run Adjustment 1
Check the operation without mounting a work and set the safety speed invalid on the teaching tool such as PC, and then check the operation with a work mounted.

→ **Check Item**
Any vibration or abnormal noise?

No → Check if there is any problem with the installation of the actuator and the condition of the actuator use exceeds the ranges of the rated values.
Adjust the servo if necessary.

↓ Yes

⚠ Caution To ensure safety, it is recommended that safety speed be enabled during initial movements.

Test Run Adjustment 2
Output the operation command from PLC to the controller and check the system operation.

6. MEC Mode 3

When using this product for the first time, make sure to avoid mistakes and incorrect wiring by referring to the procedure below. “PC” stated in this section means “MEC PC software”.

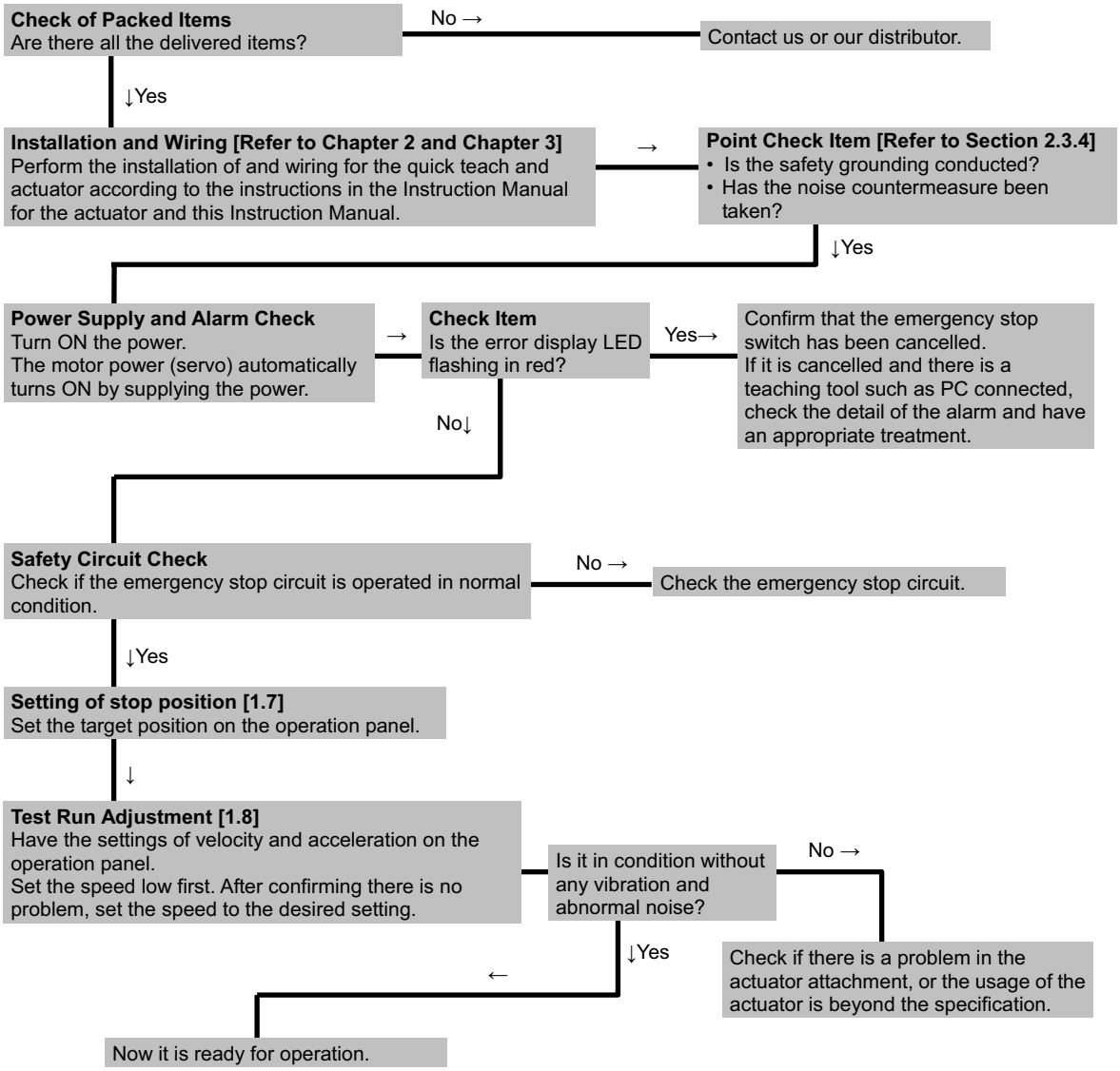

Chapter 1 Specifications Check

1.1 Product Check

1.1.1 Parts

This product is comprised of the following parts if it is of standard configuration.
If you find any fault in the contained model or any missing parts, contact us or our distributor.

(1) ERC3 Main Body

No.	Part Name		Model	Remarks
1	ERC3 Main Body		Refer to “How to read the model plate”, “How to read the model”.	
Accessories				
2	Power Supply • I/O Cable	Except for SE Type	CB-ERC3P-PWBIO□□□	□□□ shows the cable length (Example) □□□ : 020 = 2 [m]
		SE Type	CB-ERC3S-PWBIO□□□	
3	First Step Guide			
4	Instruction Manual (DVD)			
5	Safety Guide			
6	Pulse Converter (Option)		AK-04	It is necessary when pulse control is to be conducted and host controller is the open collector type.

(2) PIO Converter (Option: SE: Serial Communicate Type)

No.	Part Name	Model	Remarks
1	PIO Converter Main Body	Refer to “How to read the model plate”, “How to read the model”.	
Accessories			
2	I/O Flat Cable	CB-PAC-PIO□□□	□□□ shows the cable length (Example) □□□ : 020 = 2 [m]
3	Power Connector	FMC1.5/7-ST-3.5 (Supplier : PHOENIX CONTACT)	Recommended cable size AWG16 to 18 (1.25 to 0.75mm^2)
4	Absolute Battery (For Simple Absolute Type)	AB-7	
5	Safety Guide		

(3) Quick Teach (Option: SE: Serial Communicate Type (Specially for MEC Mode Type))

No.	Part Name	Model	Remarks
1	Main Body	Refer to “How to read the model plate”, “How to read the model”.	
Accessories			
2	2-pin plug connector for external 24V power input	733-102-CC (Supplier : WAGO)	Recommended cable size AWG20 (0.5mm^2)
3	2-pin plug connector for EMG	FMC1.5/2-ST-3.5 (Supplier : PHOENIX CONTACT)	Recommended cable size AWG16 to 24 (0.2 to 1.25mm^2) Short-circuited when delivered
4	Safety Guide		

1.1.2 Teaching Tool

The teaching tool is necessary to perform setup operations such as position and parameter settings through teaching or other means. The teaching tools listed below are available for ERC3. However, the available teaching tools differ for MEC Mode Type and CON Mode Type. Prepare an appropriate one considering the controller type.

(○: Available ×: Unavailable)

No.	Part Name	Model	Controller Type	
			CON Mode Type (Model: CN)	MEC Mode Type (Model: MC)
1	Quick Teach	RCM-PST-0	×	○
2	PC Software (Includes RS232C Exchange Adapter + Peripheral Communication Cable)	RCM-101-MW	○	×
3	PC Software (Includes USB Exchange Adapter + USB Cable + Peripheral Communication Cable)	RCM-101-USB	○	×
4	MEC PC Software	–	×	○
5	Teaching Pendant (Touch Panel Teaching)	CON-PTA	○	○
6	Teaching Pendant (Touch Panel Teaching with deadman switch)	CON-PDA	○	○
7	Teaching Pendant (Touch Panel Teaching with deadman switch + TP Adapter (RCB-LB-TG))	CON-PGA	○	○
8	Teaching Pendant	SEP-PT	×	○

1.1.3 Instruction manuals related to this product, which are contained in the DVD.

No.	Name	Manual No.
1	ERC3 Controller Instruction Manual	ME0297
2	PC Software RCM-101-MW/ RCM-101-USB Instruction Manual	ME0155
3	MEC PC Software Instruction Manual	ME0248
4	Touch Panel Teaching CON-PTA/PDA/PGA Instruction Manual	ME0295
5	Touch Panel Teaching SEP-PT Instruction Manual	ME0217
6	Instruction Manual for the serial communication [for Modbus]	ME0162

1.1.4 How to read the model plate

(1) ERC3 Main Body

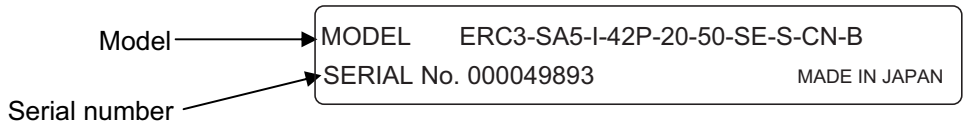

(2) PIO Converter (Option)

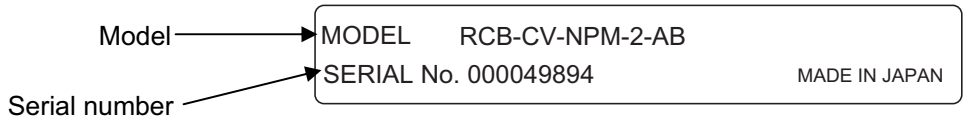

(3) Quick Teach (Option)

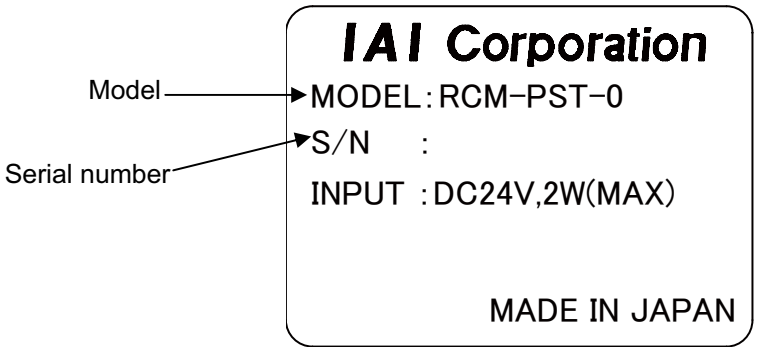

1.1.5 How to read the model

(1) ERC3 Main Body

ERC3 – SA5 – I – 42P – 20 – 50 – SE – S – CN – B – **

Series Name

<Type>
Slider Type
SA5C
SA7C
Rod Type
RA4C
RA6C

<Encoder Type>
I : Incremental

<Motor Type>
42P : 42□
56P : 56□

<Lead>
3 : 3mm
4 : 4mm
6 : 6mm
8 : 8mm
12 : 12mm
16 : 16mm
20 : 20mm
24 : 24mm

Identification for IAI use only (Note 1)

<Option>
B : Brake
NM : Reversed Home Specification
ABU : Simple Absolute Type
FL : Flange
FT : Foot bracket

<Controller Type>
CN : CON Mode
MC : MEC Mode

<Cable Length>
N : None
S : 3m
M : 5m
X□□ : Specified Length

<I/O Type>
SE : Serial Communication Type
NP : PIO NPN Type
PLN : Pulse Train NPN Type (Note 2)
PN : PIO PNP Type
PLP : Pulse Train PNP Type (Note 2)

<Stroke>
[Refer to 1.2 Specifications,
[2] Maximum speed]

Note 1 Identification for IAI use only : This may be marked for the purpose of IAI. It is not an ID to describe the model code.

Note 2 The pulse train input is the differential input (Line Driver) type. For PLN, PIO is NPN type and PLP is PNP type.

(2) PIO Converter (Option)

RCB – CV – NPM – 2 – AB – **

Series Name

<Type>
CV : Built-in Power Cutoff Relay Type (Standard)
CVG : External Power Cutoff Relay Type

<I/O Type>
NP : NPN Type (with no monitor LED)
PN : PNP Type (with no monitor LED)
NPM : NPN Type (with monitor LED)
PNM : PNP Type (with monitor LED)

Identification for IAI use only (Note 1)

<Option>
(Not Specified) :
Not applicable for Simple Absolute Type
(dedicated for Incremental Type)
AB : Applicable for Simple Absolute Type
(equipped with simple absolute battery)
ABUN : Applicable for Simple Absolute Type
(not equipped with simple absolute battery)

<I/O Cable Length>
0 : No cable
2 : with 2m cables
3 : with 3m cables
5 : with 5m cables

(3) Quick Teach (Option)

RCM - PST - 0 – ENG – **

Series Name

<Unit Name>
PST : Product Unit
PS : Power Supply Unit

<Power Voltage>
0 : 24V DC (24V DC power supply type, no power supply unit)
1 : Single-phase 100V AC (100V AC power supply type)
2 : Single-phase 100 to 230V AC (200V AC power supply type)
EU : Single-phase 100 to 230V AC (200V AC power supply type for Europe)

Identification for IAI use only (Note 1)

<Japan/Overseas specifications>
None : Destination Japan
(Panel sheet displayed in Japanese)
ENG : Destination Overseas
(Panel sheet displayed in English)

Note 1 Identification for IAI use only : This may be marked for the purpose of IAI. It is not an ID to describe the model code.

1.2 Specifications

1.2.1 Actuator

[1] High Output Setting

(1) Enabling/Disabling of High Output Setting

This actuator can select whether to enable / disable the high output setting by the parameters.
At the delivery, the high output setting is activated for all the controllers.

Controller Type	Parameter	Setting	Set Value
CON Mode Type	No.152 High Output Setting	Enabled	1 (At the delivery)
		Disabled	0
MEC Mode Type	No.28 High Output Setting	Enabled	1 (At the delivery)
		Disabled	0

1) The maximum speed, acceleration, and transportable weight differ when high output setting is enabled and disabled.
[Refer to [3] Mechanical Specifications]

2) An operation with the duty 100% is available if the high output setting is inactivated. The actuator cannot operate with 100% when it is activated.

Duty ratio is the rate of operation expressed in % that presents the time of the actuator being operated in 1 cycle of operation.

$$D = \frac{T_M}{T_M + T_R} \times 100\ [\%]$$

D : Duty
T_M : Operation time (pressing operation included)
T_R : Stop time

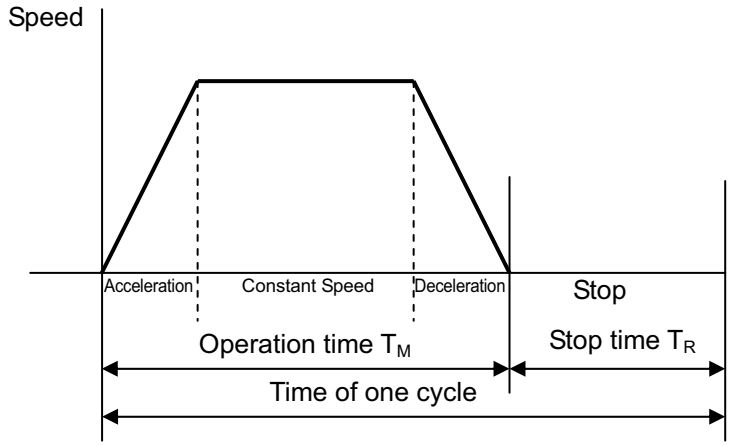

⚠ Caution: Please note that the high output setting becomes invalid automatically if Quick Teach is connected.

(2) Duty Ratio for High Output Setting

When high output setting is enabled, duty is restrained respective to the surrounding temperature to control heat generation by the motor unit.
Perform an operation with the duty ratio below the allowable range shown in the graph below.

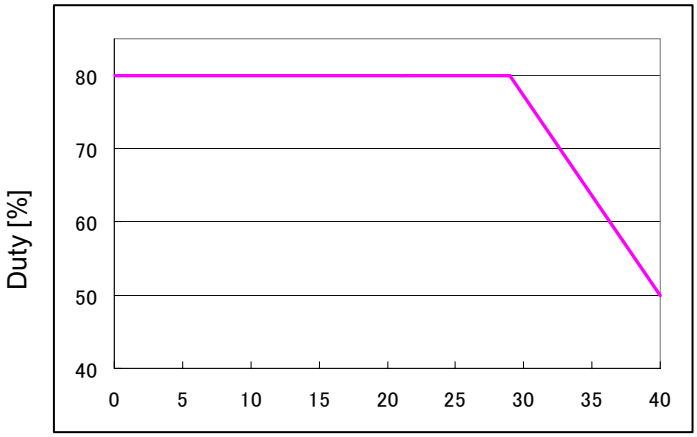

Make sure to have 1 cycle within the time described below:

Model Name	Time of one cycle (T_M+T_R)
SA5/RA4	15min. or less
SA7/RA6	10min. or less

⚠ Caution: Do not attempt to perform an operation with the duty ratio above the allowable range. An operation with the duty ratio beyond the allowable range could shorten the life of the capacitor used in the build-in controller by the generation of heat on the motor.

[2] Maximum speed

The maximum speed of the actuator is limited by the limit of the maximum ball screw revolution.

(1) Slider Type

• When high output setting is enabled

Speed limits (Unit: mm/s)

Size	Motor Type	Lead [mm]	Horizontal / Vertical	Minimum Speed	Maximum Speed															
					Stroke [mm]															
					50	100	150	200	250	300	350	400	450	500	550	600	650	700	750	800
SA5C	42P	3	Horizontal	3.75	225									200	165	140	115	100	85	75
			Vertical		225									200	165	140	115	100	85	75
		6	Horizontal	7.5	450									400	330	280	235	200	175	150
			Vertical		450									400	330	280	235	200	175	150
		12	Horizontal	15	900									805	665	560	475	405	350	300
			Vertical		900									805	665	560	475	405	350	300
		20	Horizontal	25	1120										1115	935	795	680	585	510
			Vertical		1120										1115	935	795	680	585	510
SA7C	56P	4	Horizontal	5	210												185	160	140	120
			Vertical		210												185	160	140	120
		8	Horizontal	10	490											440	375	320	280	245
			Vertical		490											440	375	320	280	245
		16	Horizontal	20	980											880	750	645	565	495
			Vertical		840												750	645	565	495
		24	Horizontal	30	1200												1130	975	850	745
			Vertical		1200												1130	975	850	745

• When high output setting is disabled

Maximum speed limits (Unit: mm/s)

Size	Motor Type	Lead [mm]	Horizontal / Vertical	Minimum Speed	Maximum Speed
SA5C	42P	3	Horizontal	3.75	150
			Vertical		150
		6	Horizontal	7.5	300
			Vertical		300
		12	Horizontal	15	600
			Vertical		600
		20	Horizontal	25	1000
			Vertical		1000
SA7C	56P	4	Horizontal	5	125
			Vertical		125
		8	Horizontal	10	250
			Vertical		250
		16	Horizontal	20	450
			Vertical		400
		24	Horizontal	30	675
			Vertical		600

⚠ Caution: Do not set speeds and accelerations/decelerations equal to or greater than the respective ratings. Doing so may result in vibration, failure or shorter life. If any acceleration/deceleration equal to or greater than the rated acceleration/deceleration is set, a creep phenomenon or slipped coupling may occur.

(2) Rod Type

• When high output setting is enabled

Speed limits (Unit: mm/s)

Size	Motor Type	Lead [mm]	Horizontal / Vertical	Minimum Speed	Maximum Speed Stroke [mm] 50	100	150	200	250	300
RA4C	42P	3	Horizontal	3.75	225				170	120
			Vertical		225				170	120
		6	Horizontal	7.5	450				345	240
			Vertical		450				345	240
		12	Horizontal	15	700				695	485
			Vertical		700				695	485
		20	Horizontal	25	800					
			Vertical		800					
RA6C	56P	4	Horizontal	5	210					200
			Vertical		175					
		8	Horizontal	10	420					400
			Vertical		420					400
		16	Horizontal	20	700					
			Vertical		560					
		24	Horizontal	30	800					
			Vertical		600					

• When high output setting is disabled

Maximum speed limits (Unit: mm/s)

Size	Motor Type	Lead [mm]	Horizontal / Vertical	Minimum Speed	Maximum Speed
RA4C	42P	3	Horizontal	3.75	150
			Vertical		150
		6	Horizontal	7.5	300
			Vertical		300
		12	Horizontal	15	600
			Vertical		600
		20	Horizontal	25	667
			Vertical		667
RA6C	56P	4	Horizontal	5	125
			Vertical		125
		8	Horizontal	10	250
			Vertical		200
		16	Horizontal	20	450
			Vertical		400
		24	Horizontal	30	675
			Vertical		600

⚠ Caution: Do not set speeds and accelerations/decelerations equal to or greater than the respective ratings. Doing so may result in vibration, failure or shorter life. If any acceleration/deceleration equal to or greater than the rated acceleration/deceleration is set, a creep phenomenon or slipped coupling may occur.

[3] MAX. Acceleration, Payload Capacity

If the payload capacity is smaller than as specified, the acceleration/deceleration can be raised beyond the applicable level.

(1) Slider Type

• When high output setting is enabled

Type	Motor Type	Lead [mm]	Horizontal / Vertical	Payload capacity by acceleration/deceleration [kg]					
				Velocity [mm/s]	0.1G	0.3G	0.5G	0.7G	1.0G
SA5C	42P	3	Horizontal	0	20	20	16	16	13
				25	20	20	16	16	13
				50	20	20	16	16	12
				75	20	20	16	16	12
				100	20	18	14	12	10
				125	20	17	14	9.5	8
				150	20	17	11	8	7
				175	20	10	10	4.5	3.5
				200	20	9	3	–	–
				225	15	–	–	–	–
			Vertical	0	12	12	12	–	–
				25	12	12	12	–	–
				50	12	12	12	–	–
				75	12	12	12	–	–
				100	12	10.5	10.5	–	–
				125	12	10.5	10.5	–	–
				150	9.5	8	8	–	–
				175	7	7	6	–	–
				200	6	4	2	–	–
				225	4.5	–	–	–	–
		6	Horizontal	0	18	18	13	12	11
				50	18	18	13	12	11
				100	18	18	13	12	11
				150	18	18	13	12	11
				200	18	18	13	12	11
				250	18	17	13	12	9
				300	16	16	12	11	7
				350	14	14	8	8	6
				400	10.5	10	7	4.5	4
				450	7.5	7	4	2.5	1
			Vertical	0	6	6	6	–	–
				50	6	6	6	–	–
				100	6	6	6	–	–
				150	6	6	6	–	–
				200	6	6	6	–	–
				250	6	5	4.5	–	–
				300	4.5	4	3.5	–	–
				350	4	3.5	3	–	–
				400	2.5	2	1.5	–	–
				450	1	0.5	–	–	–

Type	Motor Type	Lead [mm]	Horizontal / Vertical	Payload capacity by acceleration/deceleration [kg]					
				Velocity [mm/s]	0.1G	0.3G	0.5G	0.7G	1.0G
SA5C	42P	12	Horizontal	0	9	9	9	9	8
				100	9	9	9	9	8
				200	9	9	9	9	8
				300	9	9	9	9	7
				400	9	9	8	8	6
				500	9	9	8	5.5	5.5
				600	9	9	8	5.5	4
				700	9	7	6	4	2.5
				800	–	5.5	3.5	2	1
				900	–	5	2.5	1	–
			Vertical	0	2.5	2.5	2.5	–	–
				100	2.5	2.5	2.5	–	–
				200	2.5	2.5	2.5	–	–
				300	2.5	2.5	2.5	–	–
				400	2.5	2.5	2.5	–	–
				500	2.5	2.5	2	–	–
				600	2.5	2	1.5	–	–
				700	2.5	1	0.5	–	–
				800	–	0.5	0.5	–	–
				900	–	0.5	–	–	–
		20	Horizontal	0	6.5	6.5	5	5	4
				160	6.5	6.5	5	5	4
				320	6.5	6.5	5	5	4
				480	6.5	6.5	4	4	4
				640	6.5	6.5	3.5	3.5	3
				800	5.5	5.5	3.5	3	1
				960	–	5.5	2.5	2	1
				1120	–	5.5	1	1	1
				1280	–	–	–	–	–
				1440	–	–	–	–	–
			Vertical	0	1	1	1	–	–
				160	1	1	1	–	–
				320	1	1	1	–	–
				480	1	1	1	–	–
				640	1	1	1	–	–
				800	1	1	1	–	–
				960	–	0.5	0.5	–	–
				1120	–	0.5	0.5	–	–
				1280	–	–	–	–	–
				1440	–	–	–	–	–

Type	Motor Type	Lead [mm]	Horizontal / Vertical	Payload capacity by acceleration/deceleration [kg]					
				Velocity [mm/s]	0.1G	0.3G	0.5G	0.7G	1.0G
SA7C	56P	4	Horizontal	0	45	45	45	40	35
				35	45	45	45	40	35
				70	45	42	42	35	35
				105	42	40	40	35	35
				140	42	40	25	25	22
				175	38	18	–	–	–
				210	35	–	–	–	–
				245	–	–	–	–	–
			Vertical	0	22	22	22	–	–
				35	22	22	22	–	–
				70	22	22	22	–	–
				105	20	20	19	–	–
				140	15	12	11	–	–
				175	10	4.5	–	–	–
				210	6.5	–	–	–	–
				245	–	–	–	–	–
		8	Horizontal	0	43	40	40	40	40
				70	43	40	40	40	40
				140	40	40	40	38	35
				210	40	36	35	30	24
				280	40	23	11	8	2
				350	35	4	2	2	–
				420	25	–	–	–	–
				490	15	–	–	–	–
			Vertical	0	15	14	13	–	–
				70	15	14	13	–	–
				140	15	14	13	–	–
				210	11	9	9	–	–
				280	8	7	6	–	–
				350	5	3.5	1.5	–	–
				420	2.5	–	–	–	–
				490	1.5	–	–	–	–

Type	Motor Type	Lead [mm]	Horizontal / Vertical	Payload capacity by acceleration/deceleration [kg]					
				Velocity [mm/s]	0.1G	0.3G	0.5G	0.7G	1.0G
SA7C	56P	16	Horizontal	0	35	35	35	26.5	26.5
				140	35	35	35	26.5	26.5
				280	35	28	28	22	18
				420	30	23	12.5	11	10
				560	22	15	9.5	7.5	5.5
				700	20	11	5.5	3.5	2
				840	–	4	2.5	–	–
				980	–	2	–	–	–
			Vertical	0	7	6	4	–	–
				140	7	6	4	–	–
				280	7	6	4	–	–
				420	5	5	4	–	–
				560	5	4	3	–	–
				700	3.5	2.5	1.5	–	–
				840	–	1	–	–	–
				980	–	–	–	–	–
		24	Horizontal	0	20	17	15	13	11
				200	20	17	15	13	11
				400	20	14	14	13	10
				600	20	14	10	8	8
				800	10	10	8	6	2.5
				1000	–	8	4	2	1
				1200	–	4	2	–	–
			Vertical	0	3	3	3	–	–
				200	3	3	3	–	–
				400	3	3	3	–	–
				600	3	3	3	–	–
				800	–	3	2.5	–	–
				1000	–	2	–	–	–
				1200	–	1	–	–	–

⚠ Caution: Do not set speeds and accelerations/decelerations equal to or greater than the respective ratings. Doing so may result in vibration, failure or shorter life. If any acceleration/deceleration equal to or greater than the rated acceleration/deceleration is set, a creep phenomenon or slipped coupling may occur.

• When high output setting is disabled

Type	Motor Type	Lead [mm]	Horizontal / Vertical	Velocity [mm/s]	Acceleration/ Deceleration [G]	Load capacity [kg]
SA5C	42P	3	Horizontal	0	0.2	12
				19		12
				38		12
				75		12
				113		12
				150		12
			Vertical	0	0.2	6
				19		6
				38		6
				120		6
				150		4
		6	Horizontal	0	0.3	12
				38		12
				100		12
				150		12
				200		12
				300		12
			Vertical	0	0.2	3
				38		3
				80		3
				250		3
				300		2.5
		12	Horizontal	0	0.3	6
				75		6
				150		6
				400		6
				600		2
			Vertical	0	0.2	1.5
				75		1.5
				125		1.5
				450		1.5
				600		1
		20	Horizontal	0	0.3	3.5
				125		3.5
				250		3.5
				667		3.5
				1000		1
			Vertical	0	0.2	1
				125		1
				208		1
				750		1
				1000		0.5

Type	Motor Type	Lead [mm]	Horizontal / Vertical	Velocity [mm/s]	Acceleration/ Deceleration [G]	Load capacity [kg]
SA7C	56P	4	Horizontal	0	0.2	20
				10		20
				50		20
				100		20
				120		20
				125		20
			Vertical	0	0.2	10
				10		10
				35		10
				90		10
				125		2
		8	Horizontal	0	0.3	20
				30		20
				100		20
				150		20
				180		20
				250		3.5
			Vertical	0	0.2	5
				10		5
				30		5
				150		5
				200		1
				250		0.5
		16	Horizontal	0	0.3	10
				50		10
				100		10
				300		10
				450		2
			Vertical	0	0.2	2.5
				50		2.5
				100		2.5
				300		2.5
				400		0.5
		24	Horizontal	0	0.3	6
				75		6
				150		6
				450		6
				675		1
			Vertical	0	0.2	1.5
				75		1.5
				150		1.5
				450		1.5
				600		0.5

⚠ Caution: Do not set speeds and accelerations/decelerations equal to or greater than the respective ratings. Doing so may result in vibration, failure or shorter life. If any acceleration/deceleration equal to or greater than the rated acceleration/deceleration is set, a creep phenomenon or slipped coupling may occur.

(2) Rod Type

• When high output setting is enabled

Type	Motor Type	Lead [mm]	Horizontal / Vertical	Payload capacity by acceleration/deceleration [kg]					
				Velocity [mm/s]	0.1G	0.3G	0.5G	0.7G	1.0G
RA4C	42P	3	Horizontal	0	40	40	40	40	35
				25	40	40	40	40	35
				50	40	40	40	40	35
				75	40	40	40	40	35
				100	40	40	40	40	35
				125	40	40	40	40	35
				150	40	40	40	30	25
				175	36	36	35	25	20
				200	36	28	28	19.5	14
				225	36	16	14	10	6
			Vertical	0	18	18	17	–	–
				25	18	18	17	–	–
				50	18	18	17	–	–
				75	16	16	16	–	–
				100	16	15	15	–	–
				125	16	12	10	–	–
				150	10	8	5.5	–	–
				175	10	5.5	5	–	–
				200	7	5	4.5	–	–
				225	4	3.5	2	–	–
		6	Horizontal	0	40	40	31.5	30	25
				50	40	40	31.5	30	25
				100	40	40	31.5	24.5	21
				150	40	40	24.5	17.5	17.5
				200	40	40	21	14	12.5
				250	35	24.5	17.5	14	11
				300	28	21	12.5	12.5	8
				350	24.5	17.5	9.5	5.5	5.5
				400	17.5	9.5	7	4	2.5
				450	17.5	5.5	2	–	–
			Vertical	0	12	12	10	–	–
				50	12	12	10	–	–
				100	12	12	10	–	–
				150	11	11	7	–	–
				200	8	8	5.5	–	–
				250	7	7	4	–	–
				300	5.5	5.5	4	–	–
				350	4	3.5	3.5	–	–
				400	3.5	2.5	2	–	–
				450	–	1	1	–	–

Type	Motor Type	Lead [mm]	Horizontal / Vertical	Payload capacity by acceleration/deceleration [kg]					
				Velocity [mm/s]	0.1G	0.3G	0.5G	0.7G	1.0G
RA4C	42P	12	Horizontal	0	25	25	14	14	12
				100	25	25	14	14	12
				200	25	25	11	8	8
				300	25	25	11	7	5.5
				400	17.5	16.5	8	4	3.5
				500	–	15	5.5	2	2
				600	–	10	3.5	–	–
				700	–	6	2	–	–
			Vertical	0	4.5	4.5	3.5	–	–
				100	4.5	4.5	3.5	–	–
				200	4.5	4.5	3.5	–	–
				300	4	4	3.5	–	–
				400	3.5	3.5	2.5	–	–
				500	–	3.5	2	–	–
				600	–	2	1	–	–
				700	–	1	1	–	–
		20	Horizontal	0	6	6	6	5	4.5
				160	6	6	6	5	4.5
				320	6	6	6	5	3
				480	6	6	6	4.5	3
				640	–	6	4	3	2
				800	–	4	3	–	–
			Vertical	0	1.5	1.5	1.5	–	–
				160	1.5	1.5	1.5	–	–
				320	1.5	1.5	1.5	–	–
				480	1	1	1	–	–
				640	–	1	1	–	–
				800	–	0.5	0.5	–	–

Type	Motor Type	Lead [mm]	Horizontal / Vertical	Payload capacity by acceleration/deceleration [kg]					
				Velocity [mm/s]	0.1G	0.3G	0.5G	0.7G	1.0G
RA6C	56P	4	Horizontal	0	70	70	60	60	50
				35	70	70	60	60	50
				70	70	70	60	60	50
				105	70	70	55	45	40
				140	70	50	30	20	15
				175	50	15	–	–	–
				210	20	–	–	–	–
			Vertical	0	25	25	25	–	–
				35	25	25	25	–	–
				70	25	25	25	–	–
				105	15	15	15	–	–
				140	11.5	10	8	–	–
				175	6	3	–	–	–
				210	–	–	–	–	–
		8	Horizontal	0	60	55	45	40	40
				70	60	55	45	40	40
				140	60	55	40	40	40
				210	60	50	40	28	26
				280	60	32	20	15	11
				350	50	14	4.5	1	–
				420	15	–	–	–	–
			Vertical	0	17.5	17.5	17.5	–	–
				70	17.5	17.5	17.5	–	–
				140	11	11	11	–	–
				210	7.5	7.5	7	–	–
				280	6	5.5	4.5	–	–
				350	3	2.5	2	–	–
				420	2	–	–	–	–

Type	Motor Type	Lead [mm]	Horizontal / Vertical	Payload capacity by acceleration/deceleration [kg]					
				Velocity [mm/s]	0.1G	0.3G	0.5G	0.7G	1.0G
RA6C	56P	16	Horizontal	0	45	40	30	28	26
				140	45	40	30	28	26
				280	45	34	30	24	18
				420	45	22	17	13	10
				560	–	9.5	5	2.5	1.5
				700	–	2	–	–	–
			Vertical	0	8	8	8	–	–
				140	8	8	8	–	–
				280	6.5	5.5	5.5	–	–
				420	5.5	4	3	–	–
				560	–	2	1	–	–
				700	–	–		–	–
		24	Horizontal	0	20	13	11	10	8
				200	20	13	11	10	8
				400	20	13	11	10	8
				600	–	13	7	5	3.5
				800	–	3	1	–	–
			Vertical	0	3	3	2	–	–
				200	3	3	2	–	–
				400	2	2	2	–	–
				600	–	2	2	–	–
				800	–	–	–	–	–

⚠ Caution: Do not set speeds and accelerations/decelerations equal to or greater than the respective ratings. Doing so may result in vibration, failure or shorter life. If any acceleration/deceleration equal to or greater than the rated acceleration/deceleration is set, a creep phenomenon or slipped coupling may occur.

• When high output setting is disabled

Type	Motor Type	Lead [mm]	Horizontal / Vertical	Velocity [mm/s]	Acceleration/ Deceleration [G]	Load capacity [kg]
RA4C	42P	3	Horizontal	0	0.2	40
				19		40
				38		40
				75		40
				113		40
				150		40
			Vertical	0	0.2	18
				19		18
				38		18
				50		18
				150		4
		6	Horizontal	0	0.3	40
				38		40
				100		40
				150		40
				200		40
				300		12
			Vertical	0	0.2	12
				38		12
				80		12
				300		2.5
		12	Horizontal	0	0.3	25
				75		25
				150		25
				300		12
				600		2.5
			Vertical	0	0.2	4.5
				75		4.5
				125		4.5
				600		0.5
		20	Horizontal	0	0.3	12
				125		12
				200		12
				500		7
				667		6
			Vertical	0	0.2	2
				125		2
				208		2
				667		0.5

Type	Motor Type	Lead [mm]	Horizontal / Vertical	Velocity [mm/s]	Acceleration/ Deceleration [G]	Load capacity [kg]
RA6C	56P	4	Horizontal	0	0.2	55
				10		55
				20		55
				50		55
				100		55
				125		25
			Vertical	0	0.2	25
				10		25
				35		25
				125		2
		8	Horizontal	0	0.3	50
				30		50
				100		50
				150		50
				160		50
				250		3.5
			Vertical	0	0.2	17.5
				10		17.5
				30		17.5
				200		1
		16	Horizontal	0	0.3	40
				50		40
				100		40
				125		40
				450		2
			Vertical	0	0.2	5
				50		5
				100		5
				150		5
				400		0.5
		24	Horizontal	0	0.3	25
				75		25
				150		25
				188		20
				675		1.5
			Vertical	0	0.2	3
				75		3
				150		3
				225		3
				600		0.5

⚠ Caution: Do not set speeds and accelerations/decelerations equal to or greater than the respective ratings. Doing so may result in vibration, failure or shorter life. If any acceleration/deceleration equal to or greater than the rated acceleration/deceleration is set, a creep phenomenon or slipped coupling may occur.

[4] Driving System • Position Detector

(1) Slider Type

Type	Motor Type	Lead	No. of Encoder Pulses (Note 1)	Ball Screw Type		
				Type	Diameter	Accuracy
SA5C	42P	3	800	Rolled	ϕ10mm	C10
		6				
		12				
		20				
SA7C	56P	4		Rolled	ϕ12mm	C10
		8				
		16				
		24				

Note 1 This is a number of pulses entered in the controller.

(2) Rod Type

Type	Motor Type	Lead	No. of Encoder Pulses (Note 1)	Ball Screw Type		
				Type	Diameter	Accuracy
RA4C	42P	3	800	Rolled	ϕ10mm	C10
		6				
		12				
		20				
RA6C	56P	4		Rolled	ϕ12mm	C10
		8				
		16				
		24				

Note 1 This is a number of pulses entered in the controller.

[5] Positioning Precision

(1) Slider Type

Type	Lead	Item	Performance
SA5C	3, 6, 12	Positioning repeatability	±0.02mm
		Lost motion	0.1mm or less
	20	Positioning repeatability	±0.03mm
		Lost motion	0.1mm or less
SA7C	4, 8, 16	Positioning repeatability	±0.02mm
		Lost motion	0.1mm or less
	24	Positioning repeatability	±0.03mm
		Lost motion	0.1mm or less

The values shown above are the accuracy at the delivery from the factory. It does not include the consideration of time-dependent change as it is used.

(2) Rod Type

Type	Lead	Item	Performance
RA4C	3, 6, 12	Positioning repeatability	±0.02mm
		Lost motion	0.1mm or less
	20	Positioning repeatability	±0.03mm
		Lost motion	0.2mm or less
RA6C	4, 8, 16	Positioning repeatability	±0.02mm
		Lost motion	0.1mm or less
	24	Positioning repeatability	±0.03mm
		Lost motion	0.2mm or less

The values shown above are the accuracy at the delivery from the factory. It does not include the consideration of time-dependent change as it is used.

[6] Current Limit Value and Pressing Force

(1) Slider Type
• SA5C

Pressing Force [N]

Ball Screw Lead [mm]	Current Limit Value [%]					
	20	30	40	50	60	70
3	106	159	211	264	317	370
6	53	79	106	132	159	185
12	26	40	53	66	79	93
20	16	24	32	40	48	56

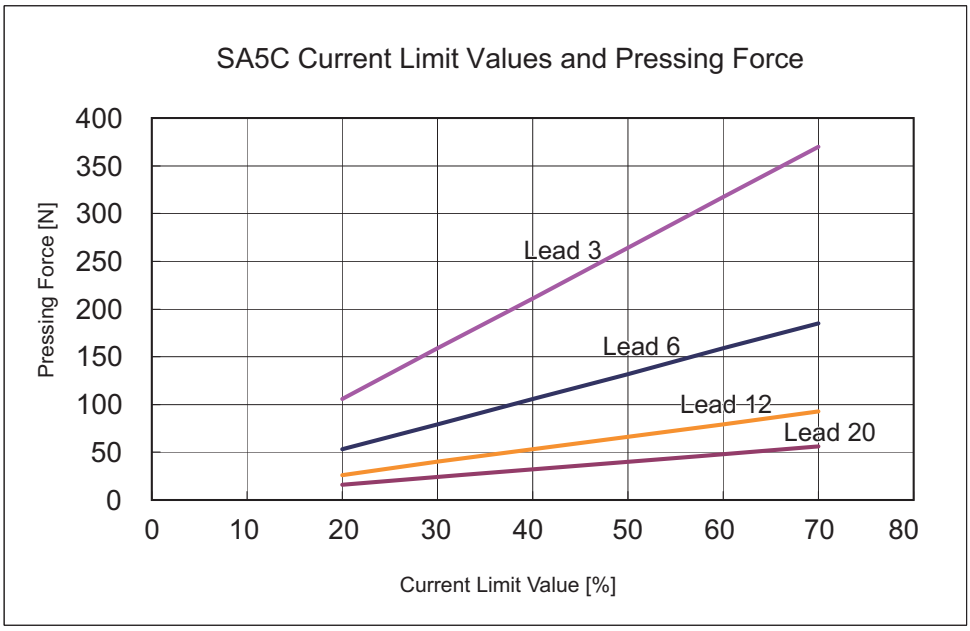

⚠ Caution: (1) The relation of the current limit and the pressing force is a reference assuming when the speed is 20mm/s.
(2) There will be a little variance in the actual pressing force. If the value of current limit is small, the variance for the pressing force becomes big.
(3) Use the product with the current limit within the range specified in the graph. If used below 20%, the pressing force would not be stable. An operation may not be made in some cases. An operation cannot be made also when it is beyond 70%. If use in such a condition, it may extremely shorten the product life by the degradation of insulator in the motor coil due to heat generation.
(4) When the approaching speed (setting in the position table) to the pressing start position is 20mm/s or less, the pressing operation will be made with the approaching speed. In this case, also, the pressing force would not be stable. In such cased, check in advance that the actuator can be used with no problem before start using.

• SA7C

Pressing Force [N]

Ball Screw Lead [mm]	Current Limit Value [%]					
	20	30	40	50	60	70
4	192	288	385	481	577	673
8	96	144	192	240	288	336
16	48	72	96	120	144	168
24	32	48	64	80	96	112

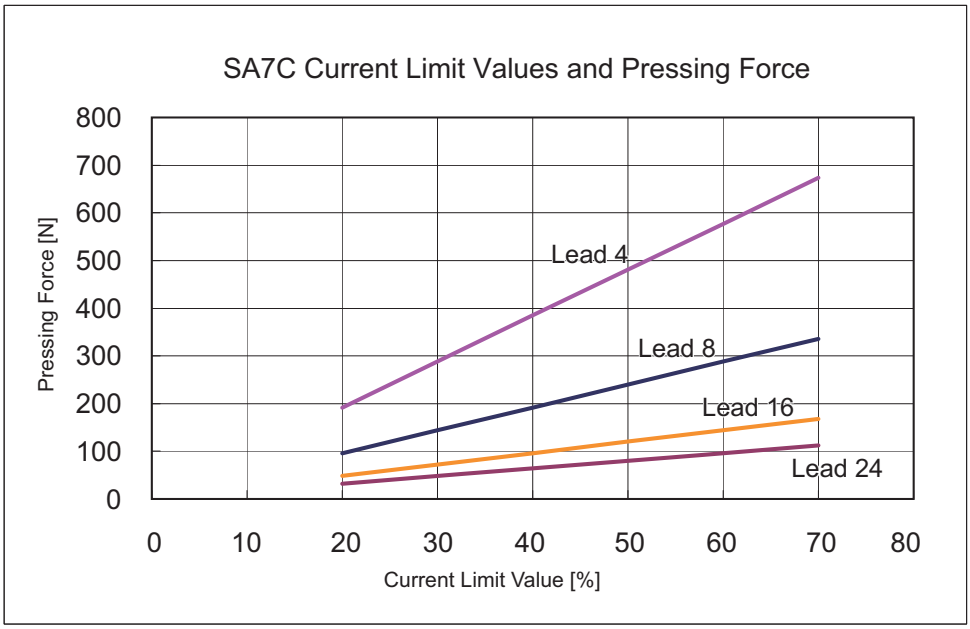

⚠Caution: (1) The relation of the current limit and the pressing force is a reference assuming when the speed is 20mm/s.
(2) There will be a little variance in the actual pressing force. If the value of current limit is small, the variance for the pressing force becomes big.
(3) Use the product with the current limit within the range specified in the graph. If used below 20%, the pressing force would not be stable. An operation may not be made in some cases. An operation cannot be made also when it is beyond 70%. If use in such a condition, it may extremely shorten the product life by the degradation of insulator in the motor coil due to heat generation.
(4) When the approaching speed (setting in the position table) to the pressing start position is 20mm/s or less, the pressing operation will be made with the approaching speed. In this case, also, the pressing force would not be stable. In such cased, check in advance that the actuator can be used with no problem before start using.

(2) Rod Type
• RA4C

Pressing Force [N]

Ball Screw Lead [mm]	Current Limit Value [%]					
	20	30	40	50	60	70
3	106	159	211	264	317	370
6	53	79	106	132	159	185
12	26	40	53	66	79	93
20	16	24	32	40	48	56

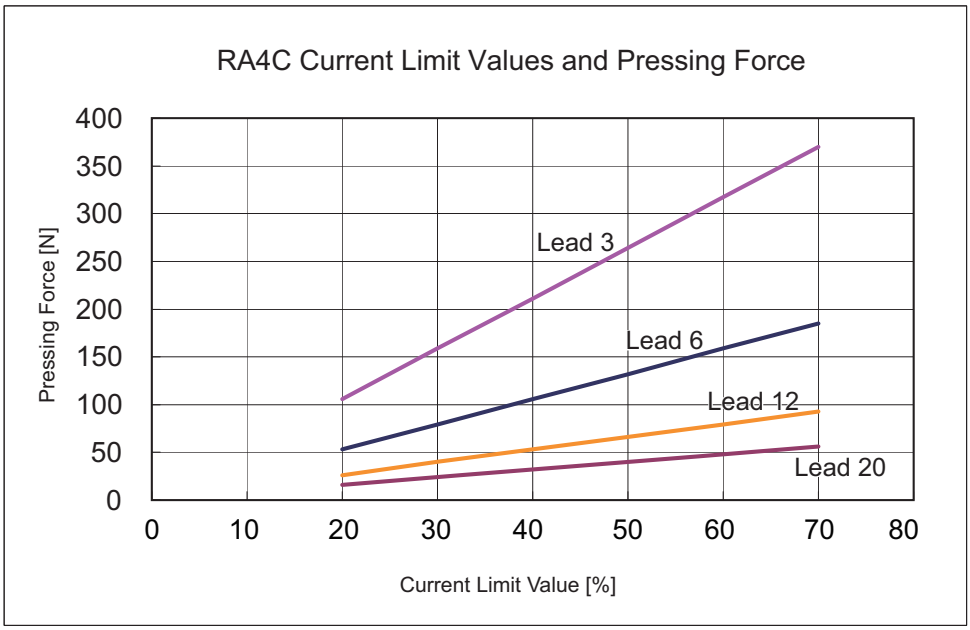

⚠ Caution: (1) The relation of the current limit and the pressing force is a reference assuming when the speed is 20mm/s.
(2) There will be a little variance in the actual pressing force. If the value of current limit is small, the variance for the pressing force becomes big.
(3) Use the product with the current limit within the range specified in the graph. If used below 20%, the pressing force would not be stable. An operation may not be made in some cases. An operation cannot be made also when it is beyond 70%. If use in such a condition, it may extremely shorten the product life by the degradation of insulator in the motor coil due to heat generation.
(4) When the approaching speed (setting in the position table) to the pressing start position is 20mm/s or less, the pressing operation will be made with the approaching speed. In this case, also, the pressing force would not be stable. In such cased, check in advance that the actuator can be used with no problem before start using.

• RA6C

Pressing Force [N]

Ball Screw Lead [mm]	Current Limit Value [%]					
	20	30	40	50	60	70
4	312	469	625	781	937	1094
8	156	234	312	391	469	547
16	78	117	156	195	234	273
24	52	78	104	130	156	182

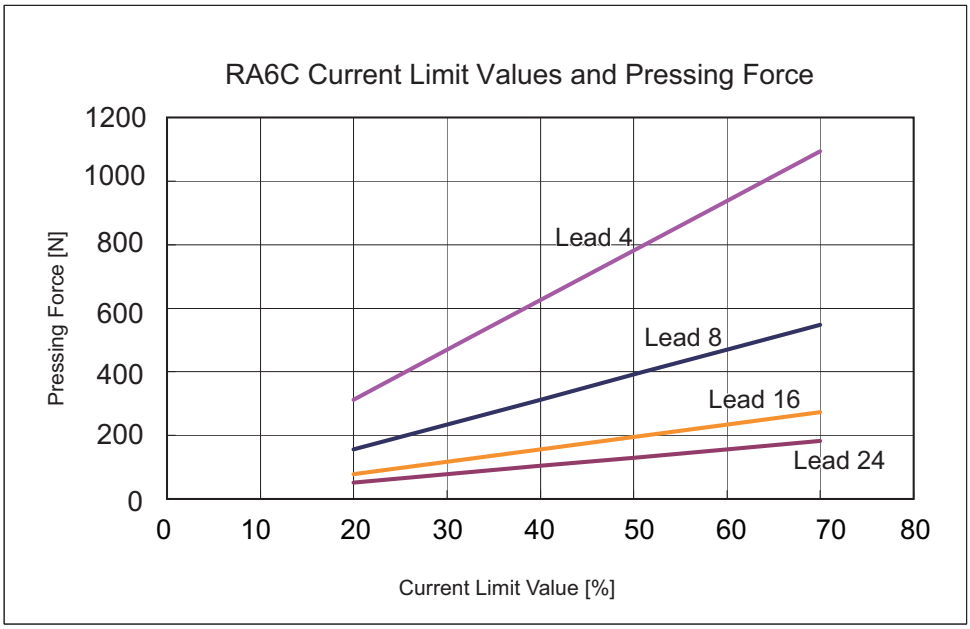

⚠ Caution: (1) The relation of the current limit and the pressing force is a reference assuming when the speed is 20mm/s.
(2) There will be a little variance in the actual pressing force. If the value of current limit is small, the variance for the pressing force becomes big.
(3) Use the product with the current limit within the range specified in the graph. If used below 20%, the pressing force would not be stable. An operation may not be made in some cases. An operation cannot be made also when it is beyond 70%. If use in such a condition, it may extremely shorten the product life by the degradation of insulator in the motor coil due to heat generation.
(4) When the approaching speed (setting in the position table) to the pressing start position is 20mm/s or less, the pressing operation will be made with the approaching speed. In this case, also, the pressing force would not be stable. In such cased, check in advance that the actuator can be used with no problem before start using.

[7] Option

(1) With Brake (Model: B)
This is a function that is necessary when the actuator is mounted in the vertical orientation. This prevents a drop of work piece or fixture attached on the actuator when the power or servo is turned OFF.

(2) Home Reversed Type (Model: NM)
In the standard type, the home position is set on the motor end. This is a specification when an indication is desired for the operation direction to be matched with the coordination system of the device that the actuator is to be installed.

> ⚠ Caution: The home position is already adjusted when the product is shipped out from our factory. When a change is desired to the home-reversed type after delivery, it is necessary that you return the product to us for an adjustment. Contact our sales office or an agent near you.

(3) Simple Absolute Type (Model: ABU)
It is not necessary to have a home-return operation every time the power is turned ON. PIO Converter of Simple Absolute Type is required for this function, and it is available only when the I/O type of the actuator is the serial communication type (Model Code: SE). [Refer to Chapter 6]

(4) Flange (Model: FL)
It is an option for Rod Type. This is a metal component for flange to fix the unit on the rod side. [Refer to 2.3 How to Install]

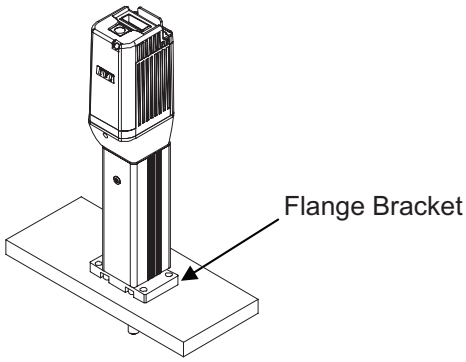

(5) Foot Brackets (Model: FT)
It is an option for Rod Type. It is a metal part to be attached on the bottom of the actuator to affix with screws from top side. [Refer to 2.3 How to Install]

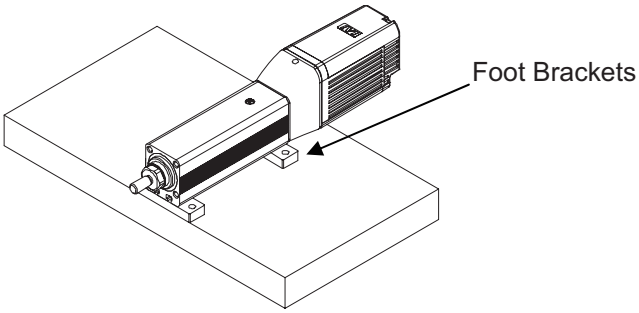

1.2.2 Built-in Controller

[1] Basic Specifications

Item		Description
Power-supply Voltage		24V DC ±10%
Load Current (including current consumption for control)		High output setting is enabled (Set in delivery) : 3.5A (MAX. 4.2A)
		High output setting is disabled : 2.2A
Power Supply for Electromagnetic Brake (Note 1) (In the case of the actuator with a brake)		24V DC ±10% 0.15A (MAX.)
Heat Generation		High output setting is enabled (Set in delivery) : 8.0W
		High output setting is disabled : 5.0W
Rush Current (Note 2)		8.3A
Transient Power Cutoff Durability		MAX. 500μs
Motor Control System		Weak field-magnet vector control
Applicable Encoder		Incremental Encoder Resolution 800pulse/rev
Actuator Cable Length		MAX. 10m
Serial Communication Interface (SIO Port)		RS485: 1CH (based on Modbus Protocol RTU/ASCII) Speed : 9.6 to 230.4Kbps Control available with serial communication in the modes other than the pulse train
External Interface	PIO Type	Signal I/O dedicated for 24V DC (selected from NPN/PNP) ··· Input 6 points max., output 4 points max. Cable length MAX. 10m
	Fieldbus Type	Not applicable
Data Setting and Input		PC Software, Teaching Pendant
Data Retention Memory		Position data and parameters are saved in the nonvolatile memory. (There is no limitation in number of writing)
Operation Mode (I/O Type)	SE/NP/PN	Positioner Mode
	PLN/PNP	Pulse Train Control Mode
Number of Positions in Positioner Mode		Standard 8 points, MAX. 16 points (Note) Number of positions differs depending on the selection in PIO pattern.
Pulse Train Interface	Input Pulse	Differential System (Line Driver System) : MAX.200kpps Cable length MAX. 10m
		Open Collector System : Not applicable (Note 3)
	Command Pulse Magnifications (Electronic Gear: A/B)	1/50 < A/B < 50/1 Setting Range of A and B (set to parameter) : 1 to 4096
	Feedback Pulse Output	None
LED Display (Mounted on motor unit)		2 colors LED: Servo ON (GN) / Servo OFF (OFF) / Emergency Stop (RD) / Alarm generated (RD) / Automatic servo-off (Flashing in green)
Electromagnetic Brake Compulsory Release Switch		Not equipped on main unit, equipped on PIO Converter (option)
Insulation Resistance		500V DC 10MΩ or more
Protection Function against Electric Shock		Class I basic insulation
Cooling Method		Natural air-cooling
Environment (Note 4)	Surrounding Air Temperature	0 to 40°C
	Surrounding Humidity	85%RH or less (non-condensing)
	Surrounding Environment	[Refer to Installation Environment]
	Surrounding Storage Temperature	0 to 60°C (0 to 50°C if stored for 1 month or more.)
	Surrounding Storage Humidity	85%RH or less (non-condensing)
	Usage Altitude	1000m or lower above sea level
	Protection Class	IP20
	Vibration Durability	Frequency 10 to 57Hz / Swing width : 0.075mm Frequency 57 to 150Hz / Acceleration : 9.8m/s^2 XYZ Each direction Sweep time: 10 min. Number of sweep: 10 times
	Impact	150mm/s^2, 11mm/s Semi-sine wave pulse to each of the directions X, Y and Z
Weight		Refer to specifications for actuator for it is integrated with controller
External Dimensions		

Note 1 It is the power source to be supplied when compulsorily releasing the brake.
Note 2 Rush current passes for about 5ms after the power is injected (at 40°C).
The rush current value varies depending on the impedance of the power line.
Note 3 If the pulse train applies the open collector output, prepare AK-04 (option) separately to convert to the differential type.
Note 4 The environmental specifications include the actuator main unit.

[2] I/O Specifications

(1) PIO Interfaces

	Input section		Output section	
Specification	Input voltage	24V DC ±10%	Load voltage	24V DC ±10%
	Input current	4mA/1 circuit	Peak load electric current	50mA/1 point
	ON/OFF voltage	ON voltage 18V DC or more OFF voltage 6V DC or less	Leak current	MAX.0.1mA/1 point
Insulation Type	Non-insulated from external circuit		Non-insulated from external circuit	
NPN	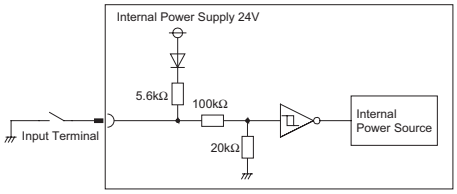		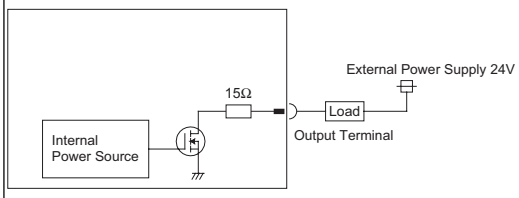	
PNP	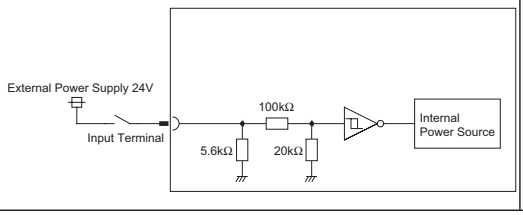		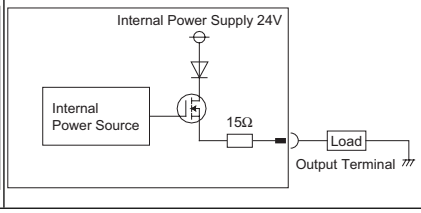	
Connection Cable	PIO type power and I/O cable [Refer to 3.1.3 [2]]			

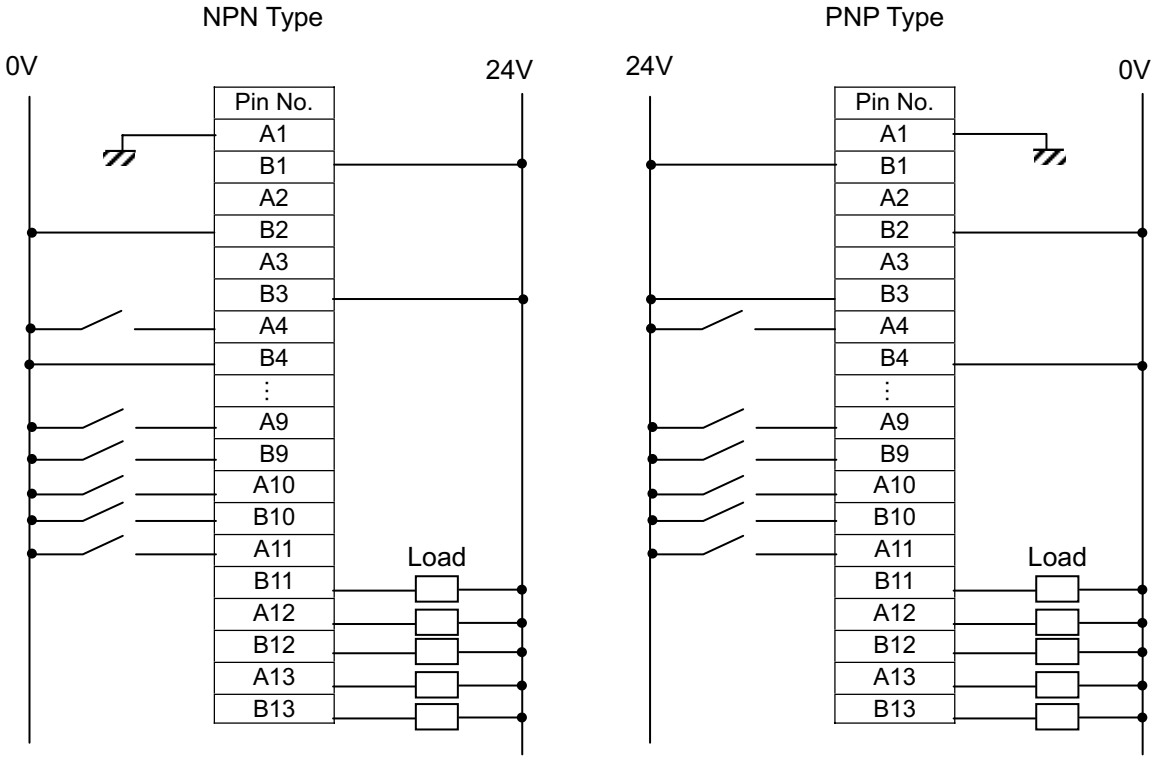

(2) Pulse Train Input Interface

Interface	Line Driver Input
Specification	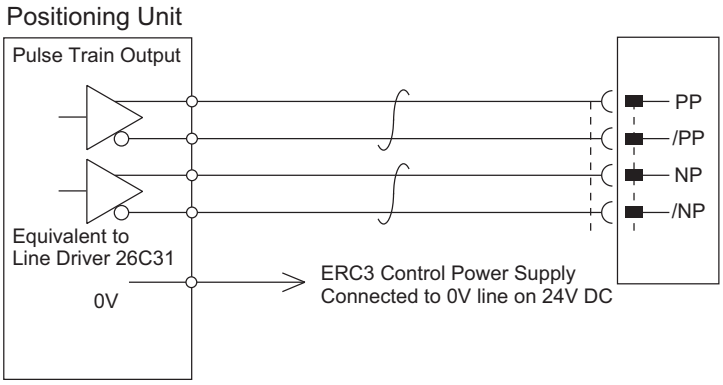 For the host positioning unit, use the line driver 26C31 or equivalent with pulse train output specification.
Format of Pulse Train	Refer to 4.3 [7]
Connection Cable	PIO type power and I/O cable [Refer to 3.2.3 [3]]

(3) Pulse converter : AK-04 (Please purchase separately)
Use this by connecting to the host controller pulse train output when the host controller output pulse is open collector type.
It converts the command pulse of the open collector type to the differential type.

Item	Specifications
Input Power Supply	24V DC ±10% (MAX. 50mA)
Input Pulse	Open collector (Collector current MAX. 12 mA)
Input Frequency	60Kpps or less
Output Pulse	Differential output equivalent to 26C31 (MAX.10mA)
Weight	10g or less (Cable connector excluded)
Accessories	37104-3122-000FL (e-CON connector) 2 Units Cover color: YW Applicable wire AWG24 (Less than 0.2 to 0.3mm^2, finished O.D. ϕ1.0 to 1.2mm)

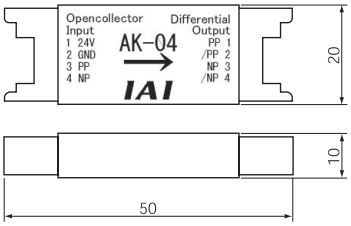

⚠ Caution
1) Use the pulse converter in the surrounding temperature range between 0 and 40°C.
2) The temperature increase of about 30°C occurs during operation. Accordingly, neither install several pulse converters in close contact nor install them within a duct.
Do not install the pulse converter near other heating devices.
3) If more than one pulse converters are installed, set a pulse converter apart from another by 10mm or more.
To avoid noise, connect it within 50mm of the pulse train output terminal.

1.2.3 Control Option

[1] PIO Converter (Model: RCB-□□□)

(1) Basic Specifications

Item		Description
Number of Controlled Axes		1 axis
Power-supply Voltage		24V DC ±10%
Load current when actuator is connected (including current consumption for control)		High output setting is enabled (Set in delivery) : 4.3A (MAX.5.0A)
		High output setting is disabled : 3.0A
Power Supply for Electromagnetic Brake (Note 1) (In the case of the actuator with a brake)		24V DC ±10% 0.15A (MAX.)
Heat Generation		1.3W
In-rush current when actuator is connected (Note 2)		8.4A
Transient Power Cutoff Durability		MAX. 500μs
Serial Communication Interface (SIO Port)		RS485: 1CH (based on Modbus Protocol RTU/ASCII) Speed : 9.6 to 230.4Kbps Control available with serial communication
External Interface	PIO Type	Signal I/O dedicated for 24V DC (selected from NPN/PNP) ··· Input 16 points max., output 16 points max. Cable length MAX. 10m
	Fieldbus Type	Not applicable
Data Setting and Input		PC Software, Teaching Pendant Position data and parameters to be saved in the non-volatile memory inside the built-in controller in the actuator via this unit (There is no limitation in number of writing) However, the clock data is to be stored in this unit (retained by capacitor power: approx. 10 days)
Actuator I/O Type		SIO Type (Model: SE) An operation with Positioner Mode is available
Number of Positions in Positioner Mode		MAX. 512 points (Note) Number of positioning points differs depending on the selected PIO pattern
LED Display	Standard Type	Controller status display
	Simple Absolute Type	Display of absolute battery status and absolute reset status
	With Monitor	Monitor display with switching Command Current Ratio / Alarm Code / PIO Input Status / PIO Output Status
Electromagnetic Brake Compulsory Release Switch		NOM (Normal Operation) / RLS (Brake release) Changeover
Insulation Resistance		500V DC 10MΩ or more
Protection Function against Electric Shock		Class I basic insulation
Cooling Method		Natural air-cooling
Environment	Surrounding Air Temperature	0 to 40°C
	Surrounding Humidity	85%RH or less (non-condensing)
	Surrounding Environment	[Refer to installation Environment]
	Surrounding Storage Temperature	-20 to 70°C (Excluding battery)
	Surrounding Storage Humidity	85%RH or less (non-condensing)
	Usage Altitude	1000m or lower above sea level
	Protection Class	IP20
	Vibration Durability	Frequency 10 to 57Hz / Swing width : 0.075mm Frequency 57 to 150Hz / Acceleration : 9.8m/s^2 XYZ Each direction Sweep time: 10 min. Number of sweep: 10 times
	Impact	150mm/s^2, 11mm/s Semi-sine wave pulse to each of the directions X, Y and Z
Weight		Standard: 103g, Simple Absolute Type: 287g (including 190g for battery)
External Dimensions		25W × 90H × 98D

Note 1 It is the power source to be supplied when compulsorily releasing the brake.
Note 2 Rush current passes for about 5ms after the power is injected (at 40°C).
The rush current value varies depending on the impedance of the power line.

(2) External Dimensions

◎ For Incremental Type (Standard)

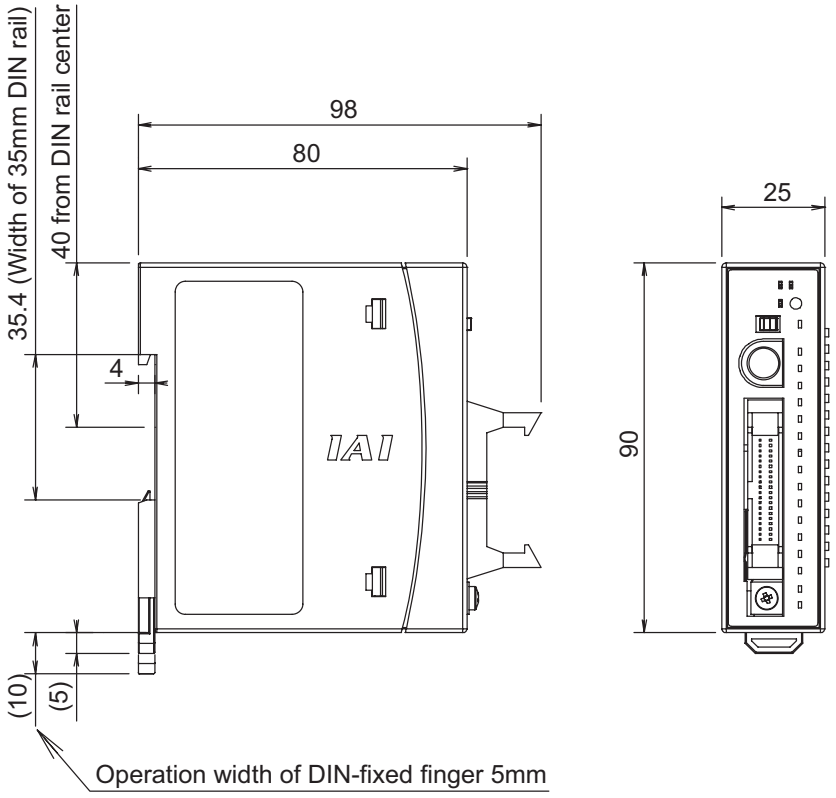

◎ For Simple Absolute Type (Option)

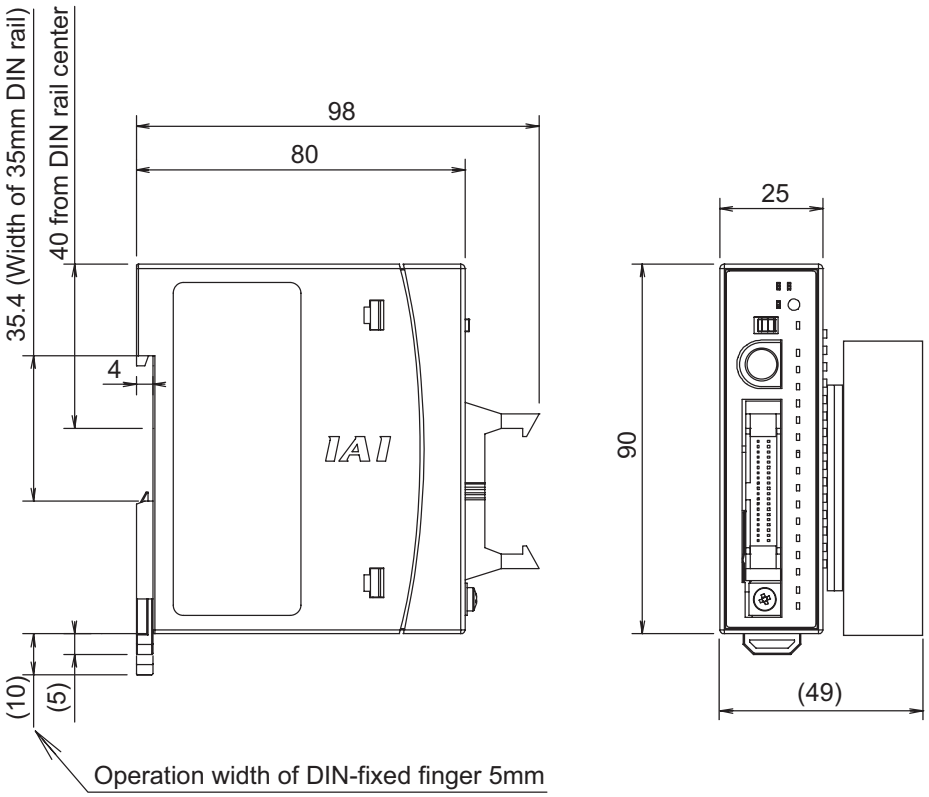

(3) PIO Input and Output Interface

	Input section		Output section	
Specification	Input voltage	24V DC ±10%	Load voltage	24V DC ±10%
	Input current	4mA/1 circuit	Peak load electric current	50mA/1 point
	ON/OFF voltage	ON voltage 18V DC or more OFF voltage 6V DC or less	Leak current	MAX.0.1mA/1 point
Insulation Type	Non-insulated from external circuit		Non-insulated from external circuit	
NPN	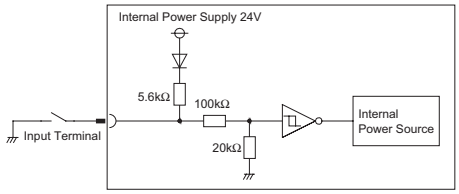		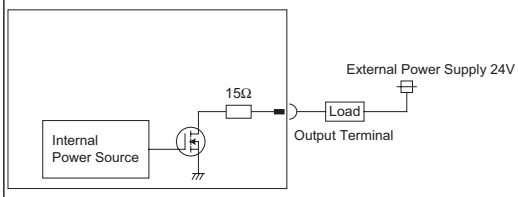	
PNP	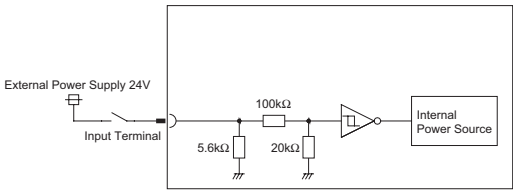		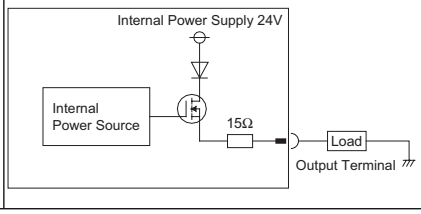	
I/O Cable	Refer to 3.3.3 [3]			

NPN Type

Same power source as that supplied to PIO Converter

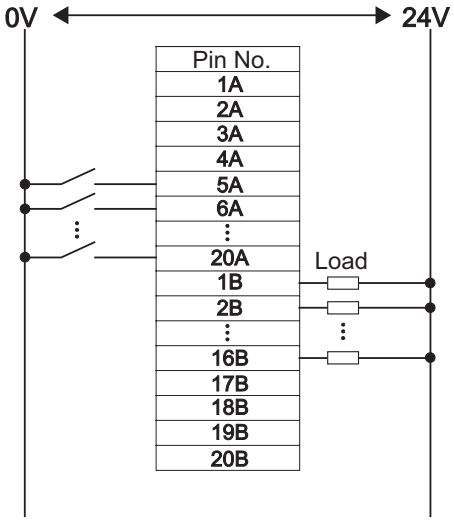

PNP Type

Same power source as that supplied to PIO Converter

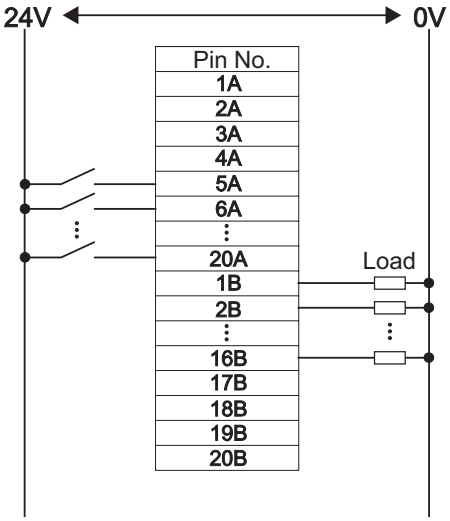

⚠ Caution: Use the same power source as that supplied to PIO Converter for the power supply to the common line. It would not operate normally if the power source is different.

[2] Quick Teach (Model: RCM-PST-□)

(1) Basic Specifications

Item		RCM-PST-0	RCM-PST-1	RCM-PST-2	RCM-PST-EU
		24V DC power supply type (Main unit of teaching pendant)	Equipped with 100V AC power supply unit	Equipped with 200V AC power supply unit	Equipped with 200V AC power supply unit dedicated for Europe
Power Supply Unit Model		–	RCM-PS-1 (Equipped with 2m cable with 3P power socket plug)	RCM-PS-2 (Equipped with 2m cable with ϕ4.3-hole solderless ring tongue terminals)	RCM-PS-EU (Equipped with 2m cable with ϕ4.3-hole solderless ring tongue terminals)
Number of Controlled Axes		1 axis			
Power-supply Voltage		24V DC ±10%	Single-phase 100 to 115V AC ±10% 50/60Hz	Single-phase 100 to 230V AC ±10% 50/60Hz	Single-phase 100 to 230V AC ±10% 50/60Hz
Load current when actuator is connected (including current consumption for control)		2.2A (High output setting is disabled)	1.3A (when 100V AC is used)	0.67A (when 100V AC is used) 0.36A (when 200V AC is used)	0.67A (when 100V AC is used) 0.36A (when 200V AC is used)
Heat generation when actuator is connected		2W	11W		
In-rush current when actuator is connected (Note 1)		8.3A	MAX. 30A	MAX. 15A	
Current leakage when actuator is connected		–	MAX. 5mA	MAX. 0.75mA	
Transient Power Cutoff Durability		–	MAX. 10ms	MAX. 10ms	MAX. 10ms
Emergency Stop		External signal input			
Data Setting and Input		Pressing button switches and dials on the operation panel			
Data Retention Memory		Position data to be saved in non-volatile memory inside built-in controller in actuator (There is no limitation in number of writing)			
Number of Settable Positions		2 or 3-point			
Operation Functions/LED Display		Servo ON/OFF, try run function as JOG, power ON/OFF, error display, etc. [Refer to Section 4.5.1]			
Electromagnetic Brake Compulsory Release Switch		Normal / Release (Compulsory release) changeover			
Insulation Resistance		500V DC 10MΩ or more			
Protection Function against Electric Shock		Class I basic insulation			
Cooling Method		Natural air-cooling			
Environment	Surrounding Air Temperature	0 to 40°C			
	Surrounding Humidity	10 to 85%RH (non-condensing)			
	Surrounding Environment	[Refer to installation Environment]			
	Surrounding Storage Temperature	-20 to 70°C			
	Surrounding Storage Humidity	90%RH (non-condensing)			
	Usage Altitude	1000m or lower above sea level			
	Protection Class	IP20			
	Vibration Durability	Frequency 5 to 9Hz / Swing width: 1.75mm (continuous), 3.5mm (intermittent) Frequency 9 to 150Hz / Acceleration 4.9m/s^2 (continuous), 9.8m/s^2 (intermittent) XYZ Each direction			
Weight		120g	540g	535g	
External Dimensions		65W × 157H × 21.6D	65W × 157H × 64.4D		

Note 1 Rush current passes for about 5ms after the power is injected (at 40°C).
The rush current value varies depending on the impedance of the power line.

Note 2 High output setting operation cannot be made with a quick teach other than RCM-PST-0.
High output setting (Parameter No.152) automatically becomes invalid if a quick teach is connected.

(2) External Dimensions

◎ RCM-PST-0

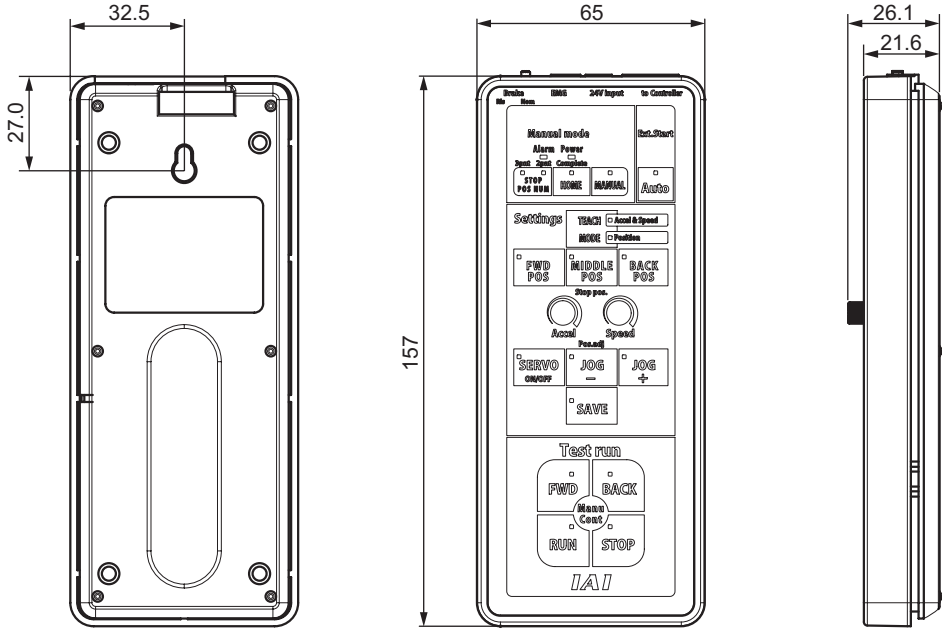

◎ RCM-PST-1/RCM-PST-2/RCM-PST-EU

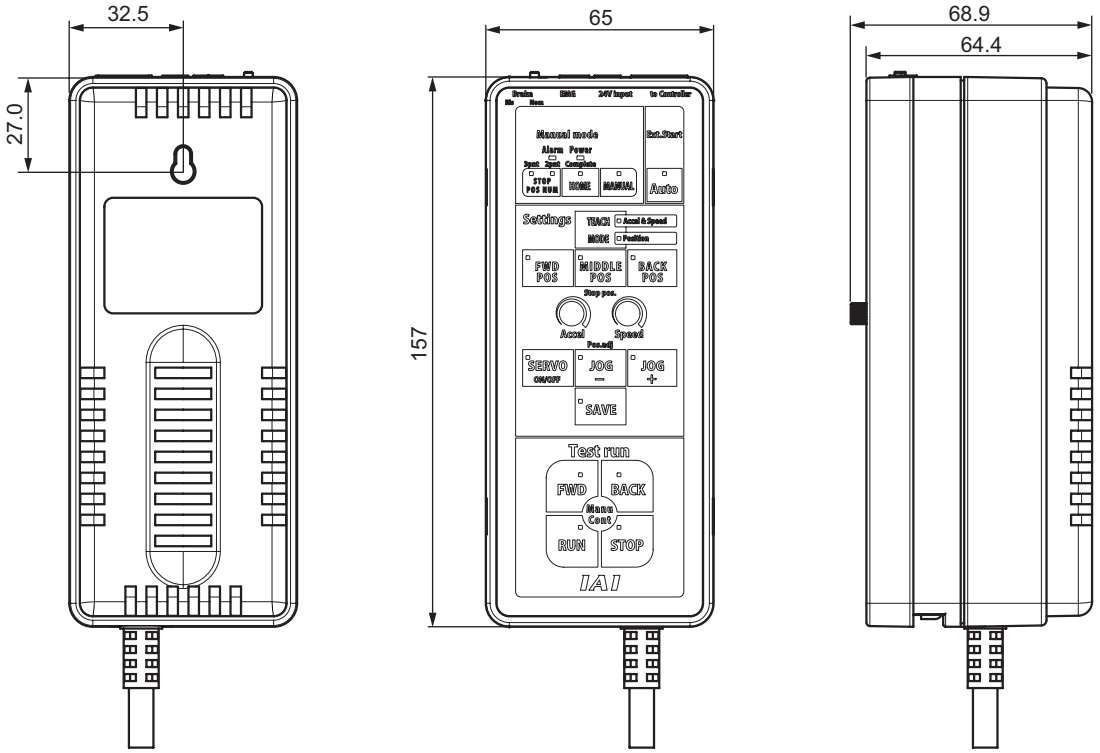

Chapter 2 Installation

2.1 Transportation

[1] Handling of Actuator, PIO Converter and Quick Teach

Unless otherwise specified, the actuators are wrapped individually when the product is shipped out. Also, PIO Converter and Quick Teach are packaged separately.

(1) Handling the Packed Unit

- Do not damage or drop. The package is not applied with any special treatment that enables it to resist an impact caused by a drop or crash.
- Transport a heavy package with at least more than two operators. Consider an appropriate method for transportation.
- Keep the unit in horizontal orientation when placing it on the ground or transporting. Follow the instruction if there is any for the packaging condition.
- Do not step or sit on the package.
- Do not put any load that may cause a deformation or breakage of the package.

(2) Handling the Actuator After Unpacking

- Do not carry an actuator by a cable or attempt to move it by pulling the cable.

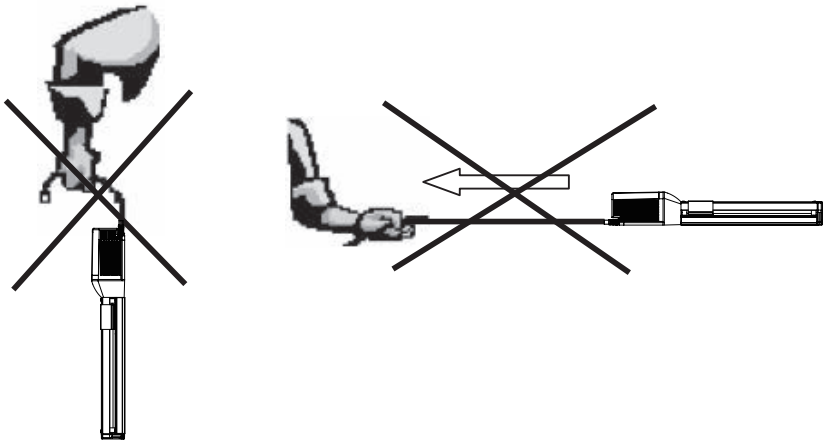

- When carrying the actuator main unit, hold the base part for the slider type and the frame of the body for the rod type.
- When carrying the actuator, exercise caution not to bump it against nearby objects or structures.
- Do not give any excessive force to any of the sections in the actuator.
- Handle with care on the operation panel of the quick teach since it is easy to get scratched.

[2] Handling of Multi-Axes Type

This is the case that this product is delivered with other actuators being combined. Multi-axes type will be delivered in a package with an outer case fixed to a wooden base. Sliders are fixed so they would not accidently move while in transportation. The end of the actuator is also fixed to avoid it swinging by external vibration.

(1) Handling the Packed Unit

- Do not damage or drop. The package is not applied with any special treatment that enables it to resist an impact caused by a drop or crash.
- Transport a heavy package with at least more than two operators. Consider an appropriate method for transportation.
- When suspending the package using ropes, pass the ropes from underneath the reinforcement frames at the bottom of the base. When lifting with a forklift, also place the forks underneath the base.
- Do not apply an impact on the package or let it bounce when putting it down.
- Do not step or sit on the package.
- Do not put any load that may cause a deformation or breakage of the package.

(2) Handling the Actuator After Unpacking

- Affix the slider and rod so they would not move while transporting.
- If any end of the actuator is overhanging, secure it properly to avoid significant movement due to external vibration. If the actuator assembly is transported without the ends being secured, do not apply an impact of 0.3G or more.
- In the case that the actuator needs to be carried up with ropes or another method, be sure to use an appropriate cushioning to avoid the robot being deformed or put on an excessive pressure. And also, be sure to keep the robot in a stable and horizontal posture. Make a tool to utilize the attachment holes and tapped holes on the actuator and attach it if necessary.
- Do not attempt to apply load to the actuator or connector box. Also, avoid the cables being pinched or caused an excessive deformation.

[3] Handling of Robot Mounted on Mechanical Equipment (System)

In below, explains how to handle the actuator when transporting it in the whole mechanical equipment (system) that the actuator is built in.

- Affix the slider and rod so they would not move while transporting.
- If any end of the actuator is overhanging, secure it properly to avoid significant movement due to external vibration. If the actuator assembly is transported without the ends being secured, do not apply an impact of 0.3G or more.
- When suspending the mechanical equipment (system) with ropes, avoid applying force to the actuator, connector box, etc. Also, avoid the cables being pinched or caused an excessive deformation.

2.2 Installation and Storage Environment

This product is capable for use in the environment of pollution degree 2[*1] or equivalent.

*1 Pollution Degree 2 : Environment that may cause non-conductive pollution or transient conductive pollution by frost (IEC60664-1)

[1] Installation Environment

(1) Actuator

Do not use this product in the following environment.
In general, the installation environment should be one in which an operator can work without protective gear.
Also provide sufficient work space required for maintenance inspection.

- Where the actuator receives radiant heat from strong heat sources such as heat treatment furnaces
- Where the surrounding temperature exceeds the range of 0 to 40°C
- Where the temperature changes rapidly and condensation occurs
- Where the relative humidity exceeds 85% RH
- Relative humidity less than 10%RH (Quick Teach)
- Where the actuator receives direct sunlight
- Where the actuator is exposed to corrosive or combustible gases
- Where the surrounding air contains a large amount of powder dust, salt or iron (at level exceeding what is normally expected in an assembly plant)
- Where the actuator is subject to splashed water, oil (including oil mist or cutting fluid) or chemical solutions
- Where the actuator receives impact or vibration

If the actuator is used in any of the following locations, provide sufficient shielding measures:

- Where noise generates due to static electricity, etc.
- Where the actuator is subject to a strong electric or magnetic field
- Where the actuator is subject to ultraviolet ray or radiation

(2) PIO Converter • Quick Teach

Do not use this product in the following environment.

- Where the surrounding temperature exceeds the range of 0 to 40°C
- Where the temperature changes rapidly and condensation occurs
- Where the relative humidity exceeds 85% RH (10 to 85%RH for Quick Teach)
- Where the actuator is exposed to corrosive or combustible gases
- Where the surrounding air contains a large amount of powder dust, salt or iron
- Where the actuator receives impact or vibration
- Where the actuator receives direct sunlight
- Where the actuator is subject to splashed water, oil or chemical solutions

If the actuator is used in any of the following locations, provide sufficient shielding measures:

- Where noise generates due to static electricity, etc.
- Where the actuator is subject to a strong electric or magnetic field
- Location with the mains or power lines passing nearby

[2] Storage • Preservation Environment

(1) Actuator

The storage • preservation environment should be similar to the installation environment. In addition, make sure condensation will not occur when the actuator is to be stored or preserved for a long period of time. Unless specified, we do not include drying agents when shipping the actuator. If you are storing the actuator in an environment where condensation might occur, you must treat the entire shipping box, or treat the actuator itself after unpacking, to prevent condensation. The unit can withstand temperatures up to 60°C during a short storage/preservation period, but only up to 50°C if the storage/preservation period is longer than one month.

The actuator should be lying flat during storage • preservation.

If the actuator is to be stored in a packed state, follow the specified actuator position if indicated.

(2) PIO Converter • Quick Teach

Storage and preservation environment follows the installation environment. However, the surrounding temperature should be from -20 to 70°C and the relative humidity to be 85%RH at maximum. Especially in a long-term storage, consider to avoid condensation of surrounding air. Unless specified, we do not include drying agents when shipping the actuator. If you are storing the actuator in an environment where condensation might occur, you must treat the entire shipping box, or treat the actuator itself after unpacking, to prevent condensation.

2.3 How to Install

2.3.1 Posture of Actuator Attachment

○ : Possible ×: Not possible

Type	Horizontal installation	Vertical installation	Sideway installation	Ceiling mount installation
Slider Type (SA5C, SA7C)	○	○	○	○
Rod Type (RA4C, RA6C)	○	○	○	○

Attachment Orientation

Horizontal	Vertical	Sideways	Ceiling mount
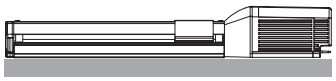	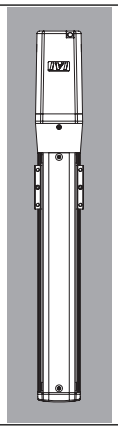		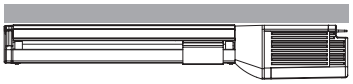

⚠ Caution:

1. When the unit is installed vertically oriented, attempt to put the motor up unless there is a special reason. Putting the motor on the lower side would not cause a problem in an ordinary operation. However, it may rarely cause a problem, when it is not operated for a long period, depending on the surrounding environment (especially high temperature), caused by the grease being separated and the base oil flowing into the motor unit.
2. If the actuator is installed in horizontally oriented wall mount for the slider types SA5C and SA7C, it is easy for a foreign object to get inside the actuator from the opening on the side of the actuator. And also it becomes easy to splash the grease applied on the guide and ball screw from the opening on the side surface.

2.3.2 Installation of Slider Type

[1] Attachment of Actuator Body

The attachment surface should be a machined surface or a flat surface that possesses an equivalent accuracy, and the flatness should be 0.05mm or less. Also, the platform should have a structure stiff enough to install the unit so it would not generate vibration or other abnormality. Also consider enough space necessary for maintenance work such as actuator replacement and inspection.

There are datum surfaces for attachment on the base.

The flatness of the slider movement is designed to be 0.05mm/m at maximum to the datum surface.

On the rear side of the actuator, there are tapped holes and through holes for attachment and reamed hole and oblong hole for positioning. See the appearance drawings for the details of the position and diameters. [Refer to Chapter 9]

Utilize the reamed holes when repeatability in the attachment after detaching is required. However, when small tunings such as the perpendicularity is required, consider such things like to use one reamed hole.

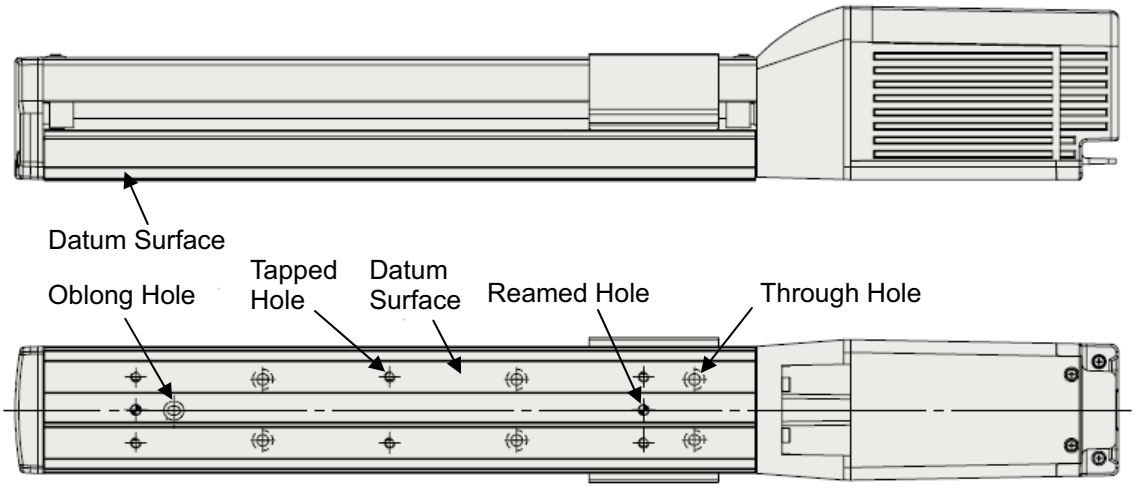

(1) Datum Surface

There are datum surfaces for attachment on the base.

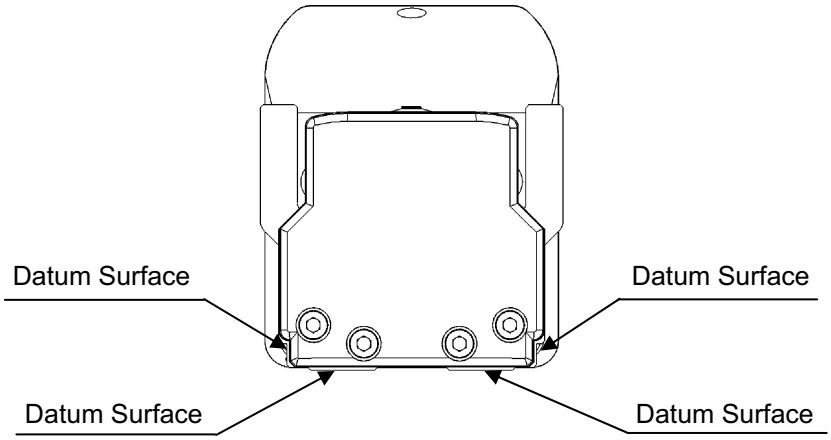

Positions of Datum Surfaces (View from shaft end of opposite side of motor)

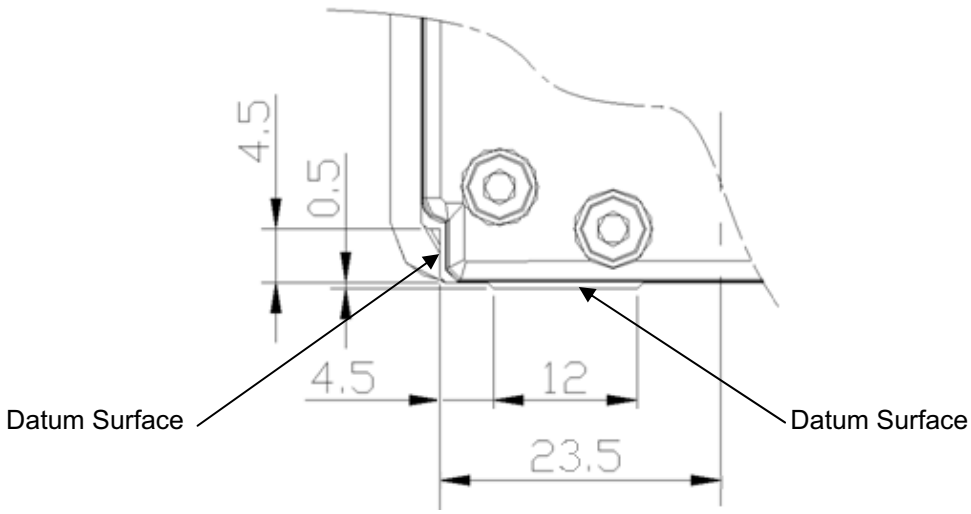

Detail of ERC3-SA5C Datum Surface

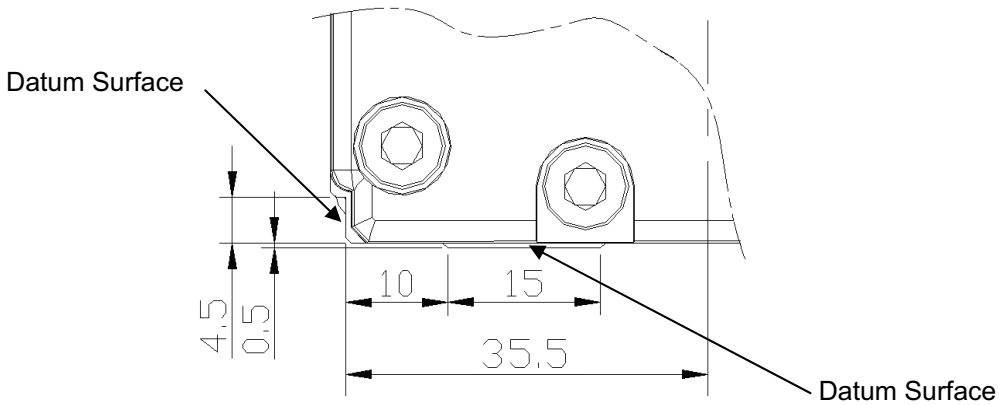

Detail of ERC3-SA7C Datum Surface

(For reference) Shown below is the section of platform when attaching using the datum.

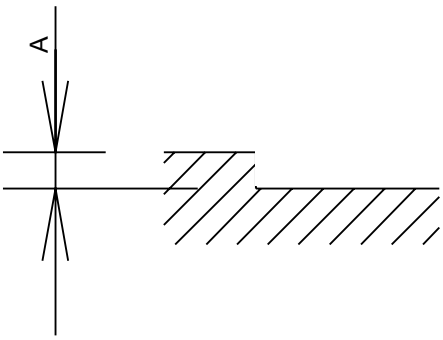

Actuator Type	A Dimension for Reference [mm]
SA5C, SA7C	1.5 to 4.5 or less

(2) Mounting Method 1 (When utilizing tapped holes)

Follow the table below for the torque to tighten the attachment screws.

Actuator Type	Tapping Diameter	Tightening Torque [N•m]	
		In the case that steel is used for the bolt seating surface:	In the case that aluminum is used for the bolt seating surface:
SA5C	M4	3.59	1.76
SA7C	M5	7.27	3.42

Regarding attachment screws
- It is recommended to use high-tensile bolts with ISO-10.9 or more.
- The length of thread engagement should be 1.8 times more than the nominal diameter, and pay attention not to stick the screw out inside the actuator.

⚠ Caution: Pay attention to the bolt length. If a bolt with inappropriate length is used, it may cause an abnormality or drop in the accuracy on the driving part, damage on tapped holes or accident or failure due to insufficient strength on the actuator attachment.

(3) Mounting Method 2 (When using through holes)

Detach the screw cover and install with hex socket head cap screws from inside the actuator.
Do not lose the screws for the screw cover attachment.
Be careful not to make a dent or scratch on the ball screw by dropping a screw or tool on it.
After installation is finished, put the screw cover back on.
Attach the actuator with the hex socket head cap screw described in the table and with the specified tightening torque.

Actuator Type	Mounting Holes	Mounting Screw	Tightening Torque [N•m]
SA5C	ϕ4.5 through hole ϕ8 counter boring depth 4.5	M4	1.76
SA7C	ϕ6 through hole ϕ9.5 counter boring depth 5.5	M5	3.42

Regarding attachment screws
- It is recommended to use high-tensile bolts with ISO-10.9 or more.
- For the effective engagement length between the bolt and female thread, provide at least the applicable value specified below:
  Female thread is made of steel material → Same length as the nominal diameter
  Female thread is made of aluminum → 1.8 times of nominal diameter

⚠ Caution: Pay attention when selecting screws. If a bolt out of the instruction is used, it may cause an abnormality or drop in the accuracy on the driving part, damage on tapped holes or unexpected accident or failure due to insufficient strength on the actuator attachment or interference on the driving area.

[2] Load Attachment

- There is a restriction on the moment and load overhang length when attaching a load to the slider.

Allowable load moment and overhang load length

Actuator Type	Allowable Static Load Moment [N•m]			Allowable Dynamic Load Moment (Note 1) [N•m]			Allowable Overhung Load Length L [mm]
	Ma	Mb	Mc	Ma	Mb	Mc	
SA5C	29.4	42	60.5	7.1	10.2	14.7	Ma direction: 150 Mb or Mc direction: 150
SA7C	70	100	159.5	15	21.4	34.1	Ma direction: 150 Mb or Mc direction: 150

Note 1 Provided under assumption that the operation life is 5,000km.

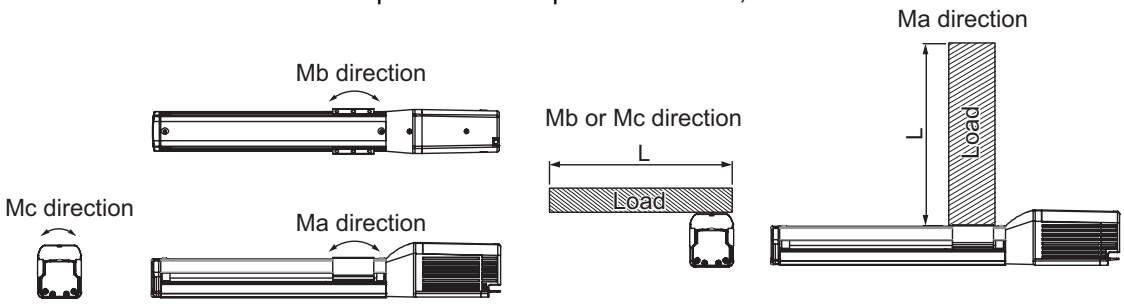

Direction of moment

Direction of allowable overhang

For the calculation of Ma and Mc moments, consider the position indicated with an arrow as the datum point.

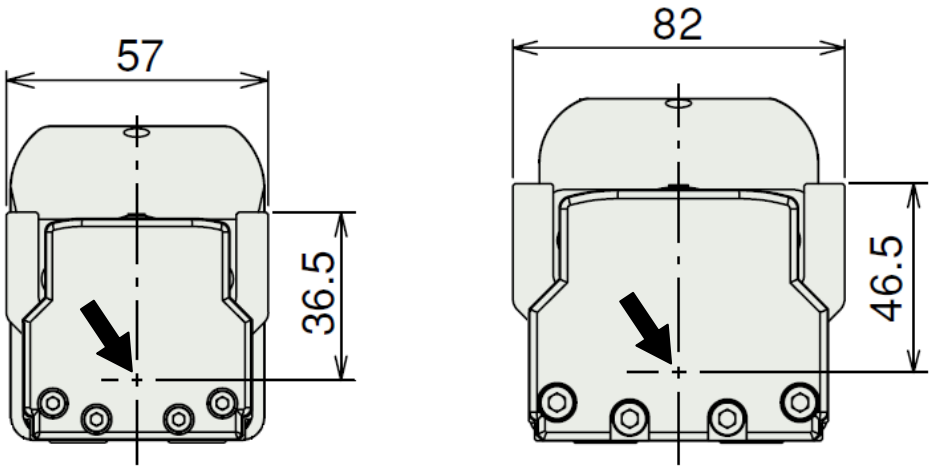

ERC3-SA5C

ERC3-SA7C

⚠ Caution: An operation beyond the allowable moment and overhang load length would not only generate abnormal noise and vibration, but also may shorten the life of actuator extremely.

- There are tapped holes on the slider top for the load attachment. Also, there are two reamed holes. Utilize the reamed holes when repeatability in the attachment after detaching is required. Also, when a tuning of such accuracy as the perpendicularity is required, use only one of the reamed holes.
- Shown below is the detail of the attachment area. Attach a load with the bolts listed in the table below with the specified tightening torque. Pay special attention to the bolt length.

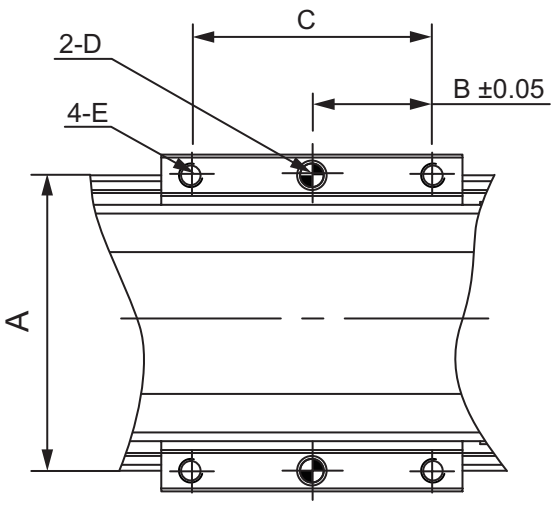

Reamer Hole Pitch : ±0.02

Actuator Type	A	B	C	D	E	Tapping Diameter	Tightening Torque [N•m]
SA5C	50	20.5	41	ϕ4H7, depth 6	M4, depth 8	M4	1.76
SA7C	72	32	64	ϕ5H7, depth 10	M5, depth 10	M5	3.42

Regarding attachment screws
- Use of high-tension bolts meeting at least ISO-10.9 is recommended.
- Make sure to have the length of at least 1.8 times to the bolt diameter below for the effective length of screw engagement for the tightening of a bolt and a female screw.

⚠ Caution: Pay attention when selecting screws. If a bolt out of the instruction is used, it may cause damage on tapped holes or unexpected accident or failure due to insufficient strength on the actuator attachment.

2.3.3 Installation of Rod Type

[1] Installation of Actuator Type Unit

There are two ways to install, one is to use the T-shaped slots on the frame and other to install vertically with using the flange surface. The installed surface should be a machined surface or a flat surface which possesses an equivalent accuracy to it, and the flatness should be 0.05mm at the maximum.

See the appearance drawings for the details of the actuator dimensions. [Refer to Chapter 9]

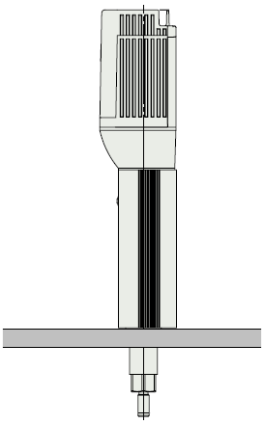

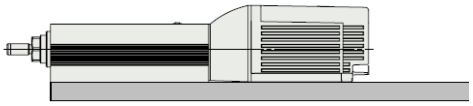

(1) Mounting Method 1 (When using T slots on frame)

There are T-shaped slots on the frame for installation. Attach the unit directly with using these T slots or use foot brackets (option).

Square nuts (4 pieces) for T-shaped slot are enclosed in standard.

- Direct Installation

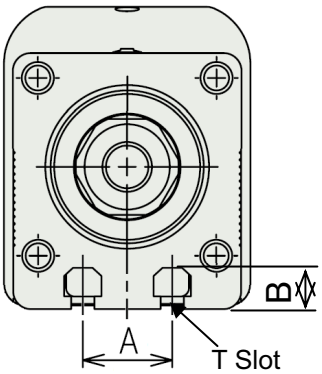

Square nut

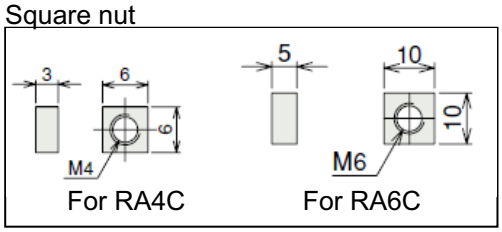

Actuator Type	Mounting Screw	A	B	Tightening Torque [N•m]
RA4C	M4	17	7	1.76
RA6C	M6	25	11.6	5.36

Regarding attachment screws

⚠ Caution: Pay attention to the bolt length. It may cause an unexpected accident or failure due to an insufficient attachment strength if the screws are too long or short.

- When Using Foot Brackets (Option)
  When installing the unit with using the foot brackets, use the T slots as for the direct installation and affix with hex socket head cap screws.

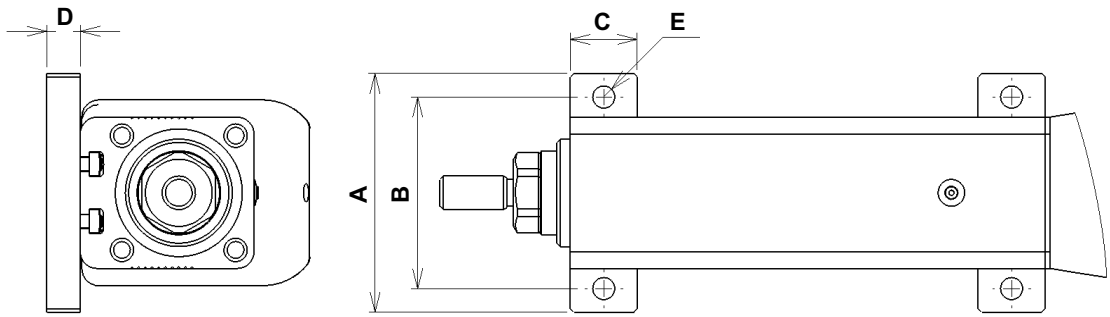

Actuator Type	A	B	C	D	E	Recommended attachment screw	Tightening Torque [N•m]
RA4C	71	57	20	10	ϕ6.6 through hole	M6	5.36
RA6C	95	79	25	12	ϕ9 through hole	M8	11.48

Regarding attachment screws
- Use of high-tension bolts meeting at least ISO-10.9 is recommended.
- For the effective engagement length between the bolt and female thread, provide at least the applicable value specified below:
  Female thread is made of steel material → Same length as the nominal diameter
  Female thread is made of aluminum → 1.8 times of nominal diameter

⚠ Caution: Pay attention when selecting screws. If a bolt out of the instruction is used, it may cause damage on tapped holes or unexpected accident or failure due to insufficient strength on the actuator attachment.

(2) Mounting Method 2 (Installation using flange surface)
- Direct Installation

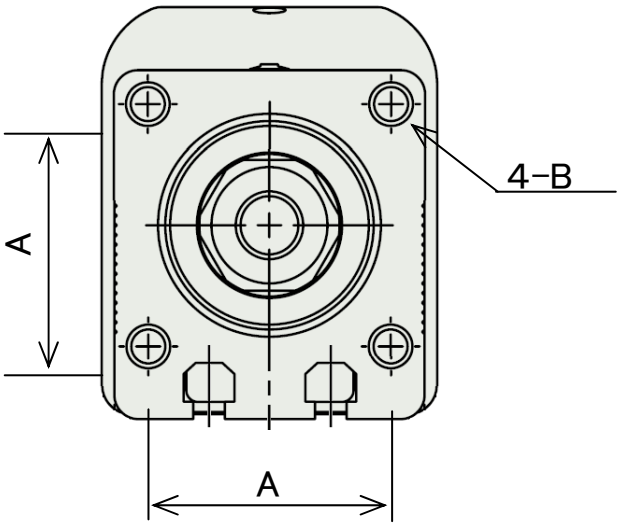

Actuator Type	A	B	Tightening Torque [N•m]
RA4C	34	M6, depth 12	5.4
RA6C	50	M8, depth 16	11.5

Regarding attachment screws
- Use of high-tension bolts meeting at least ISO-10.9 is recommended.
- Make sure to have the length of at least 1.8 times to the bolt diameter for the effective length of screw engagement for the tightening of a bolt and a female screw.

⚠ Caution: Pay attention when selecting screws. If a bolt out of the instruction is used, it may cause damage on tapped holes or unexpected accident or failure due to insufficient strength on the actuator attachment.

- When Using Flange Bracket (Option)
  When installing the unit with using the flange bracket, use the tapped holes as for the direct installation and affix with hex socket head cap screws.

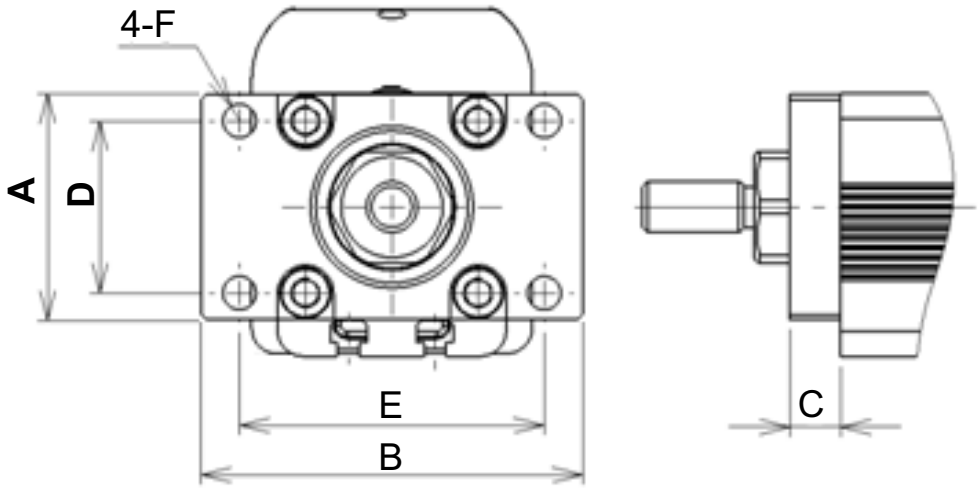

Actuator Type	A	B	C	D	E	F	Mounting Screw	Tightening Torque [N•m]	
								If the platform to attach actuator is steel	If the platform to attach actuator is aluminum
RA4C	44.5	75	10	34	60	ϕ6.6 through hole	M6	12.34	5.36
RA6C	63.5	99	12	50	82	ϕ9 through hole	M8	29.97	11.48

Regarding attachment screws
- Use of high-tension bolts meeting at least ISO-10.9 is recommended.
- For the effective engagement length between the bolt and female thread, provide at least the applicable value specified below:
  Female thread is made of steel material → Same length as the nominal diameter
  Female thread is made of aluminum → 1.8 times of nominal diameter

⚠ Caution: Pay attention when selecting screws. If a bolt out of the instruction is used, it may cause damage on tapped holes or unexpected accident or failure due to insufficient strength on the actuator attachment.

Caution:

- When installing on the flange, do not apply external force to the unit. It may cause an operation error or damage with the external force.

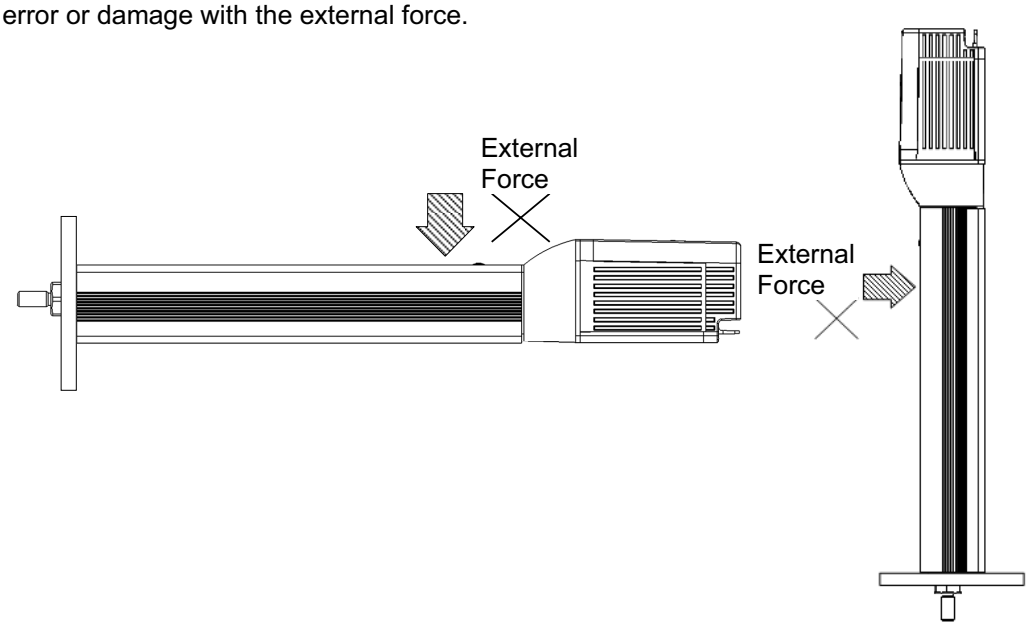

- Even if external force is not applied, when the length of the unit is 386mm or more and the actuator is installed horizontally, apply a support as shown in the figure below. Even the unit length 386mm or less, vibration may get generated in some operation conditions or installation environment, and may result in an operation error or damage. Have an appropriate support in such cases.

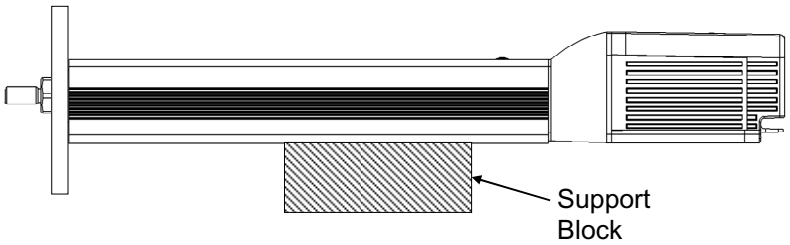

[2] Load Attachment

Utilize the threaded part on the rod tip to attach the load. Screw in the load or use the enclosed nut. The enclosed nut can also be used as a stopper to stop from loosened after the load is screwed in.

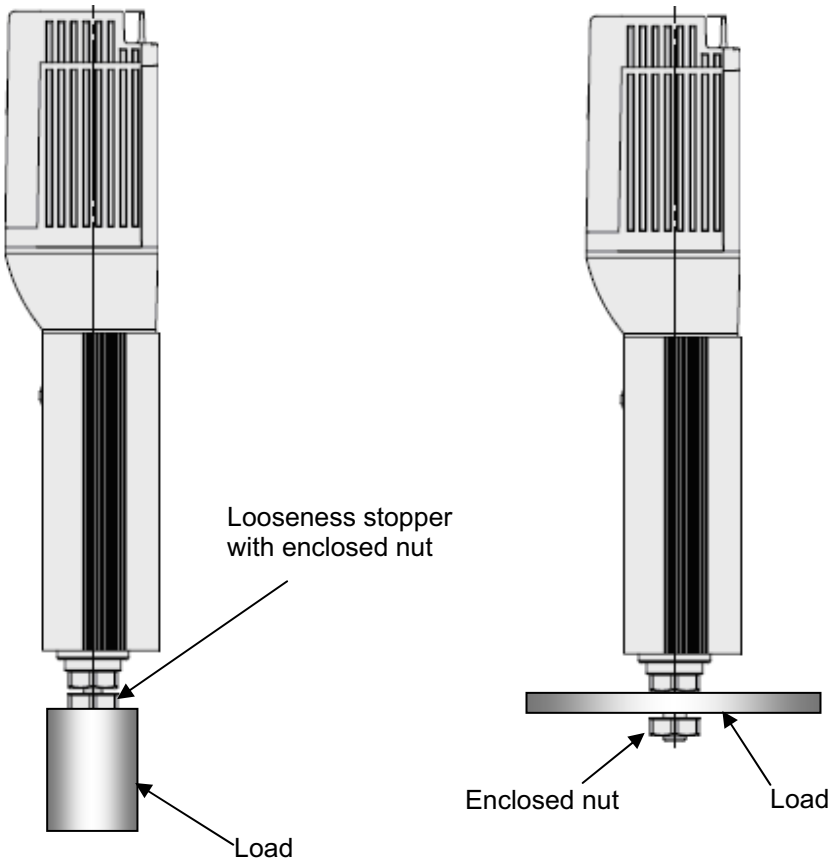

Maximum nut tightening torque of metal part on rod tip (Note 1)

- RA4 31.9N•m
- RA6 88.8N•m

Note 1 Listed above are the maximum nut tightening torques in the basis of the metal part on the tip of the rod. Tighten the nut with the appropriate torque below those values considering the condition of the load attachment. In case the load is a material other than steel, such as aluminum, or the area of the tightening contact surface is small, consider the limit interface pressure of the material of the load and set the appropriate torque below the limit value.

⚠ Caution:

- Do not attempt to apply the radial load to the tip of the rod. An operation with the radial load being applied may cause an abnormal noise or vibration resulted in generation of an alarm. Also, it may shorten the actuator life extremely.

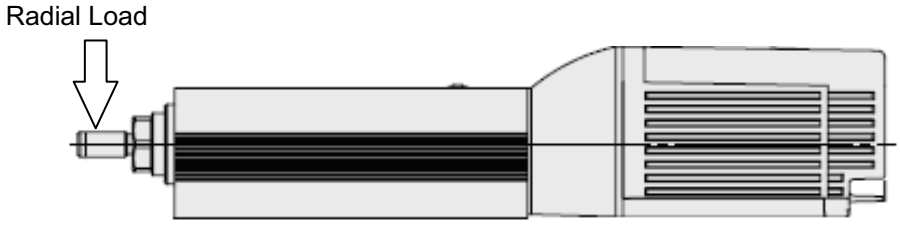

- Pay attention not to rotate the rod when attaching a load. Make sure to hold 2 faces on the top with a wrench so the tightening torque would not be applied to the rod.

The allowable static rotation torque should be 0.5N•m

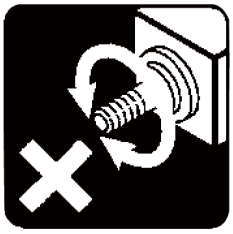

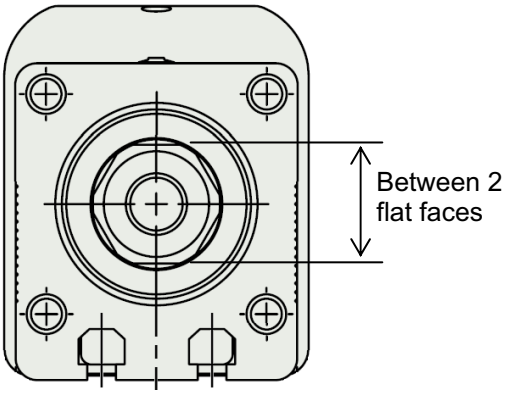

2.3.4 Noise Prevention and How to Attach Electrical Devices

[1] Noise Elimination Grounding (Frame Ground)

(1) When controlling ERC3 directly from the host controller (PLC)

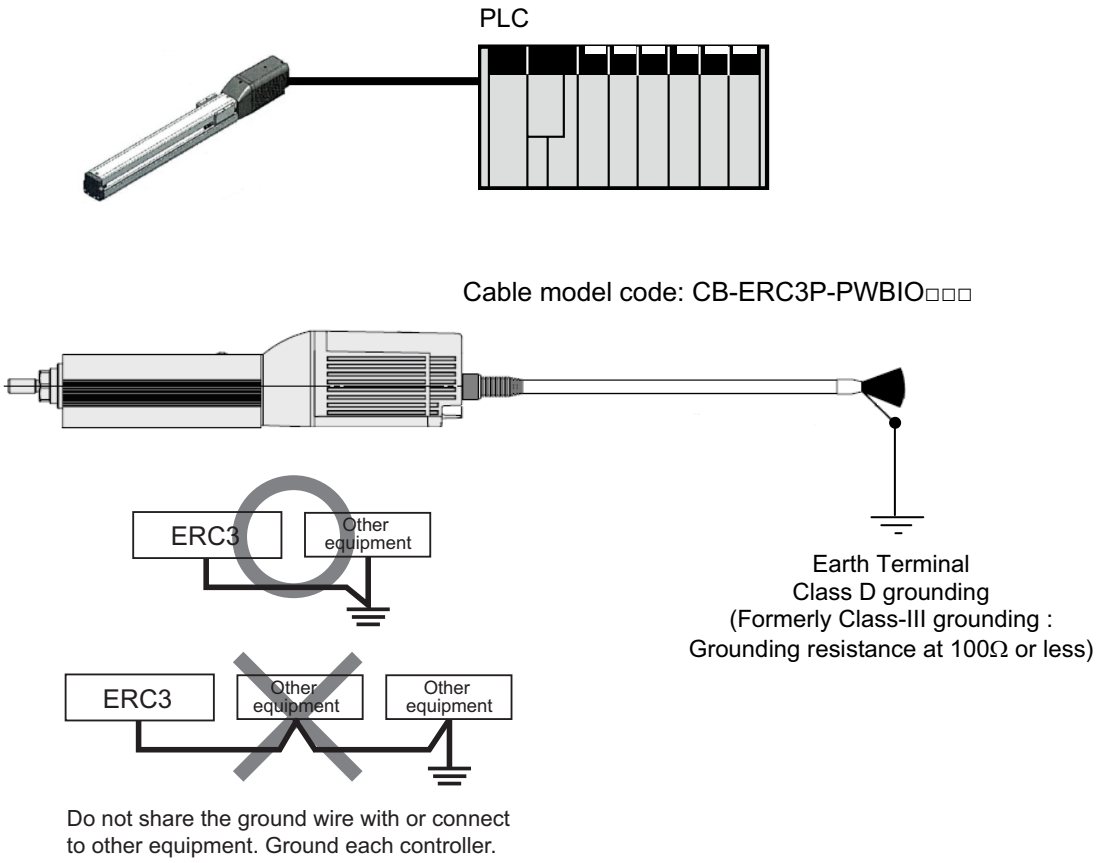

ERC3 possesses a built-in controller in the actuator body. The frame ground line for this controller is equipped in the PIO type power and I/O cable. Connect this to the ground terminal using a relay terminal block.
For the grounding line after the relay terminal apply a low carbon steel wire with the diameter 1.6mm (AWG14: 2mm^2) or more.

(2) When controlling with using PIO converter

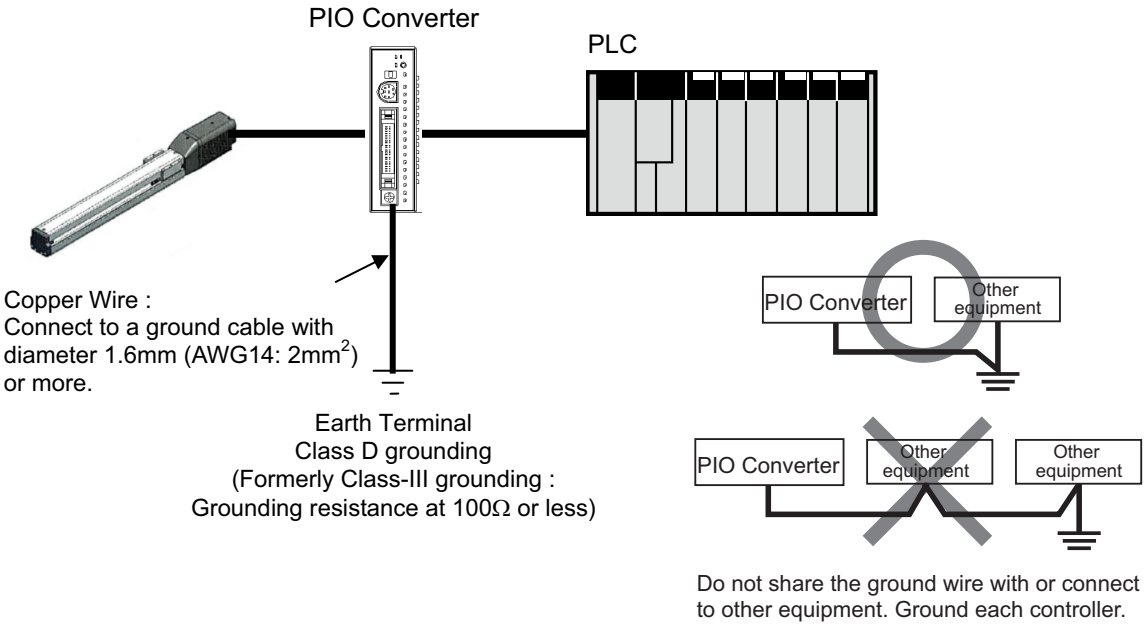

There is a terminal for frame grounding on the front panel of PIO Converter. Connect it to the grounding terminal. Use a low carbon steel wire with the diameter 1.6mm (AWG14: $2mm^2$) or more for grounding.

(3) How to ground Quick Teach

1) RCM-PST-0 (24V DC power supply type)
It is not necessary to ground the quick teach since its frame ground is connected to the actuator with the connection cable. Have a ground on the platform to install the actuator the actuator main unit. For grounding, make sure to conduct Class D Grounding (former Class 3 Grounding: grounding resistance 100Ω or less).

2) RCM-PST-1

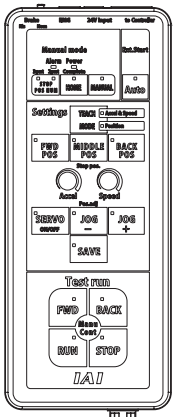

Connect it to a power socket with a grounding electrode.
If socket is not with a grounding electrode, use a 3P-2P conversion adopter and plug into 2P power socket. Connect the ground line to a ground terminal near the socket.
Otherwise, cut the cable and connect it using a terminal block in an electromagnetic control box.

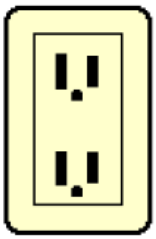

3P-2P conversion adapter
(generally purposed)

Ground wire

Copper Wire :
Connect to a ground cable with diameter 1.6mm (AWG14: 2mm^2) or more.

Earth Terminal
Class D grounding
(Formerly Class-III grounding :
Grounding resistance at 100Ω or less)

⚠ Caution:

In case it is necessary to use a terminal block in an electromagnetic control box, cut off the 3P plug to connect the line.
In that case, do not attempt to share the ground line with other devices or join with others.
For the wiring, follow the cable colors described below.

Electric wire color	Signal Name	Description
BR	L	Power supply
BL	N	
YW & GN	PE	Ground wire

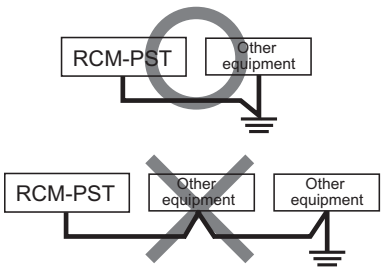

3) RCM-PST-2/RCM-PST-EU

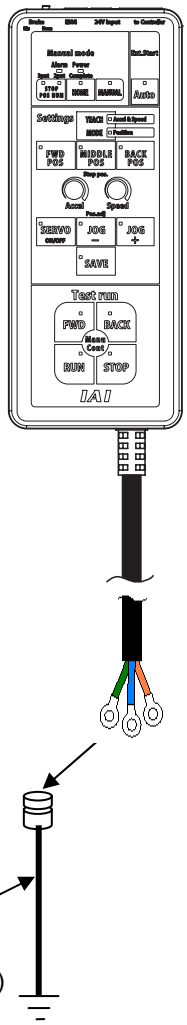

Connect a 3P power socket plug and plug into a power socket with a ground electrode as conducted in 2), or connect to a 2P power socket and have the ground line connected to a ground terminal near the socket.
Otherwise, make a connection using a terminal block inside an electromagnetic control box.

Electric wire color	Signal Name	Description
BR	L	Power supply
BL	N	
YW & GN	PE	Ground wire

Copper Wire :
Connect to a ground cable with diameter 1.6mm (AWG14: 2mm^2) or more.

Earth Terminal
Class D grounding
(Formerly Class-III grounding :
Grounding resistance at 100Ω or less)

⚠ Caution:

In case it is necessary to use a terminal block in an electromagnetic control box, do not attempt to share the ground line with other devices or join with others.

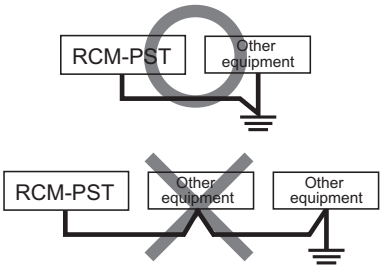

[2] Precautions regarding wiring method

1) Wire is to be twisted for the power supply.
2) Separate the signal and encoder lines from the power supply and power lines.

[3] Noise Sources and Elimination

Carry out noise elimination measures for electrical devices on the same power path and in the same equipment. The following are examples of measures to eliminate noise sources.

1) AC solenoid valves, magnet switches and relays
   [Measure] Install a Surge absorber parallel with the coil.

2) DC solenoid valves, magnet switches and relays
   [Measure] Mount the windings and diodes in parallel.
   Select a diode built-in type for the DC relay.

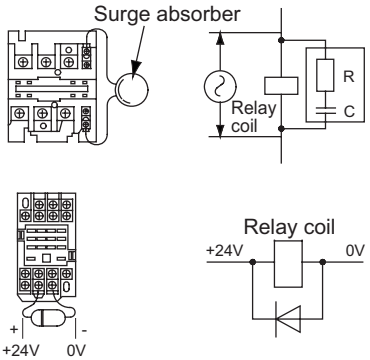

[4] Cooling Factors and Installation

1) PIO Converter
   Design and Build the system considering the size of the controller box, location of the controller and cooling factors to keep the surrounding temperature around the controller below 40°C.

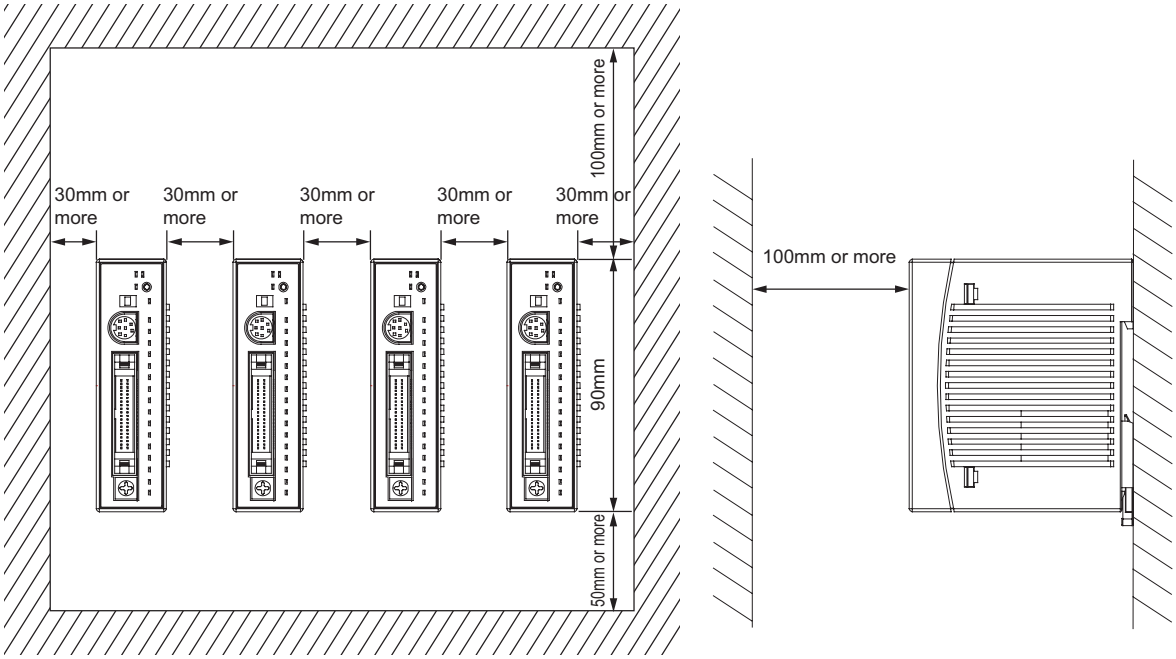

2) Quick Teach

- RCM-PST-0 (24V DC power supply type)
  As shown in the figure on the right, Quick Teach can be hanged on a wall using the hook hole for wall mount on the back of it if a pan head screw is prepared on a wall.

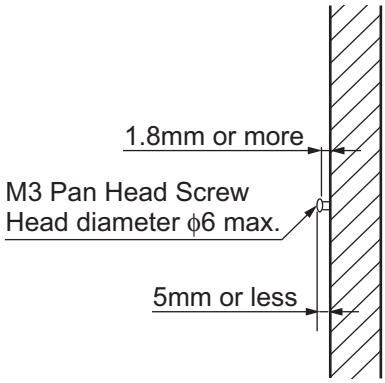

- RCM-PST-1/RCM-PST-2/RCM-PST-EU (Equipped with power supply unit)
  Shown below is the figure describing the dimensions for when the unit is permanently installed in an electromagnetic control box.

Unit: mm

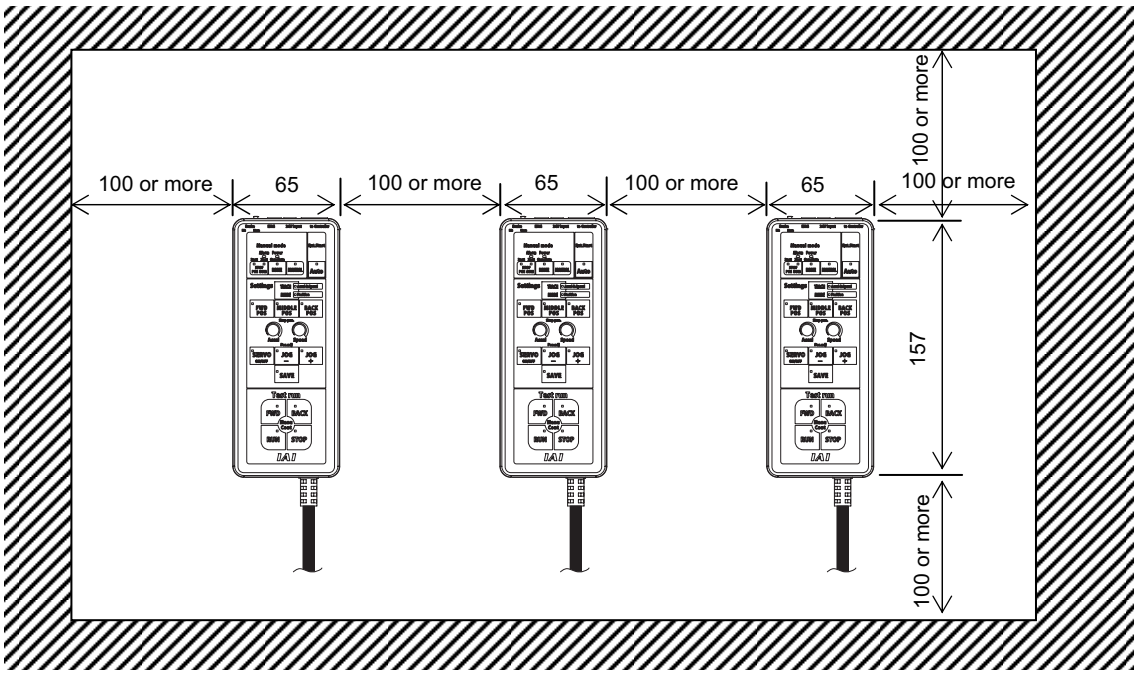

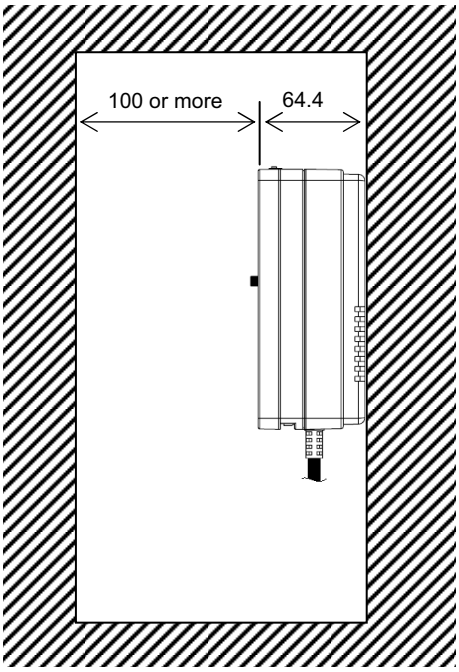

Chapter 3 Wiring

3.1 Positioner Mode 1 (Standard Type)

3.1.1 Wiring Diagram (Connection of construction devices)

I/O type of the model code is NP or PN.

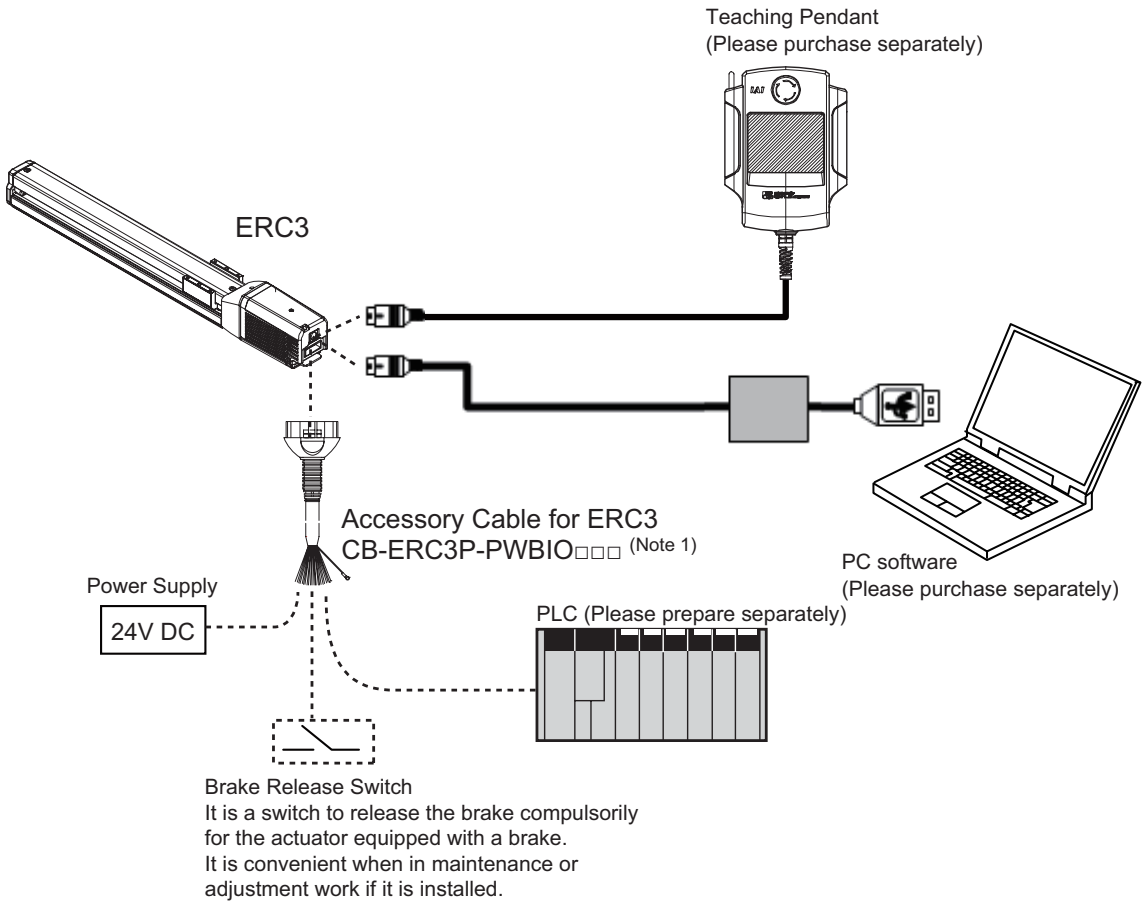

Note 1 □□□ indicates the cable length. (Example) 030 = 3m

3.1.2 PIO Pattern Select and PIO Signal

[1] PIO Pattern (Control Pattern) Selection

There are three ways of control methods for ERC3 controllers. Set the most suitable PIO pattern to Parameter No.25 “PIO Pattern Select”.
Refer to 4.2.2 Operation in Positioner Mode 1 for the details of PIO patterns.

Type	Value set in parameter No.25	Mode	Overview
PIO Pattern 0	0 (at the delivery)	8-point type	• Number of positioning points : 8 points • Position command : binary code • Zone signal output*1 : 1 point
PIO Pattern 1	1	3-point type (Solenoid valve type)	• Number of positioning points : 3 points • Position command : Individual number signal ON • Zone signal output : None
PIO Pattern 2	2	16-point type	• Number of positioning points : 16 points • Position command : binary code • Position zone signal output*2 or Zone signal output*1 : 1 point (Note 1)

Note 1 The position zone signal output can be switched to the zone signal with Parameter No.149.

*1 Zone signal output : Zone range is to be set to either Parameter No.1, 2 and it is always available after the home-return operation is complete.

*2 Position zone signal output : This feature is associated with the specified position number. The zone range is set in the position table. The zone range is enabled only when the position is specified but disabled if another position is specified.

[2] PIO Patterns and Signal Assignment

The signal assignment of cable by the PIO pattern is as shown below. Follow the following table to connect the external equipment (such as PLC).

Pin No.	Wire Color	Category	PIO Functions	Parameter No.25 (PIO Pattern) Selection		
				0	1	2
				8-point type	3-point (solenoid valve) type	16-point type
		Input	Number of positioning points	8 points	3 points	16 points
			Home return signal	○	×	×
			Jog signal	×	×	×
			Teaching signal (Current position writing)	×	×	×
			Brake release	○	○	○
		Output	Moving signal	×	×	×
			Zone signal	○	×	○
			Position zone signal	×	×	×
A1	Drain	Frame ground		FG		
B1	BR	Control power unit +24V		CP		
A2	–	–		–		
B2	RD	Control power unit 0V		CP_GND		
A3	RD 1	Brake release		BK		
B3	OR	Motor power unit +24V		MP		
A4	OR 1	Emergency-stop input		EMG		
B4	YW	Motor power unit 0V		MP_GND		
A5	–	–		–		
B5	GN	–		–		
A6	–	–		–		
B6	BR 1	–		–		
A7	BL	–		–		
B7	PL	–		–		
A8	GY	–		–		
B8	WT	–		–		
A9	BR 2	Input	IN0	PC1	ST0	PC1
B9	RD 2		IN1	PC2	ST1	PC2
A10	OR 2		IN2	PC4	ST2	PC4
B10	YW 2		IN3	HOME	–	PC8
A11	GN 2		IN4	CSTR	RES	CSTR
B11	BL 2		IN5	*STP	*STP	*STP
A12	PL 2	Output	OUT0	PEND	PE0	PEND
B12	GY 2		OUT1	HEND	PE1	HEND
A13	WT 2		OUT2	ZONE1	PE2	PZONE/ ZONE1
B13	BK		OUT3	*ALM	*ALM	*ALM

(Note) Signal with "*" expresses the signal of active low.

(Reference) Signal of Active Low
Signal with "*" expresses the signal of active low. A signal of active low is a signal that the input signal is processed when it is turned OFF, output signal is ordinary ON while the power is ON, and turns OFF when the signal is output.

[3] List of PIO Signals

The table below lists the functions of PIO signals. Refer to the section shown in Relevant Sections for the details of the control of each signal.

Category	Signal Abbreviation	Signal Name	Function Description		Relevant Sections
Input	EMG	Emergency Stop Input	It shuts the motor power supply.		4.2.2 [3]
	BK	Brake Forcible Release	The brake will forcibly be released.		4.2.2 [4]
	CSTR	Start Signal	The actuator will start to move to the position set by the command position number.		4.2.2 [7]
	PC1 to PC8	Command Position Number	Input of the position number to move (binary input)		4.2.2 [7]
	*STP	Pause	When this signal turns OFF while the actuator is moving, the actuator will decelerate to stop. The remaining movement is retained and will resume when the signal is turned ON again.		4.2.2 [7]
	HOME	Home Return	The controller will perform home return operation when this signal is turned ON.		4.2.2 [6]
	ST0 to ST6	Start Signal	The actuator moves to the position corresponding to the start signal when this signal is on in Electromagnetic Valve Mode.		4.2.2 [8]
Output	PEND	Position Complete	Turns ON in the positioning width range after actuator operation. The INP signal will turn OFF if the position deviation exceeds the in-position range. PEND and INP can be switched over by the parameter.		4.2.2 [6] [7]
	HEND	Home Return Completion	This signal will turn ON when home return has been completed. It will be kept ON unless the home position is lost.		4.2.2 [6] [7]
	ZONE1	Zone Signal 1	Turns ON if the current actuator position is within the range set to the parameter No.1, 2.	For PIO Pattern 2, the mode can be switched over between ZONE1 and PZONE with Parameter No. 149. (At the delivery: PZONE)	4.2.2 [6]
	PZONE	Position Zone	This is a function belonging to the commanded position number, and the zone range is to be set in the position table and is effective only when that position is indicated. This signal turns ON when the current position comes into the range set in the position data.		4.2.2 [6]
	*ALM	Alarm	Turns ON when the controller is in normal condition, and turns OFF when an alarm is generated.		4.2.2 [6]
	PE0 to PE2	Current Position Number	In the electromagnetic valve mode, this signal will turn ON when the actuator completes moving to the target position.		4.2.2 [8]

3.1.3 Circuit Diagram

Sample circuit diagrams are shown below.

[1] Power Line and Emergency Stop Circuit

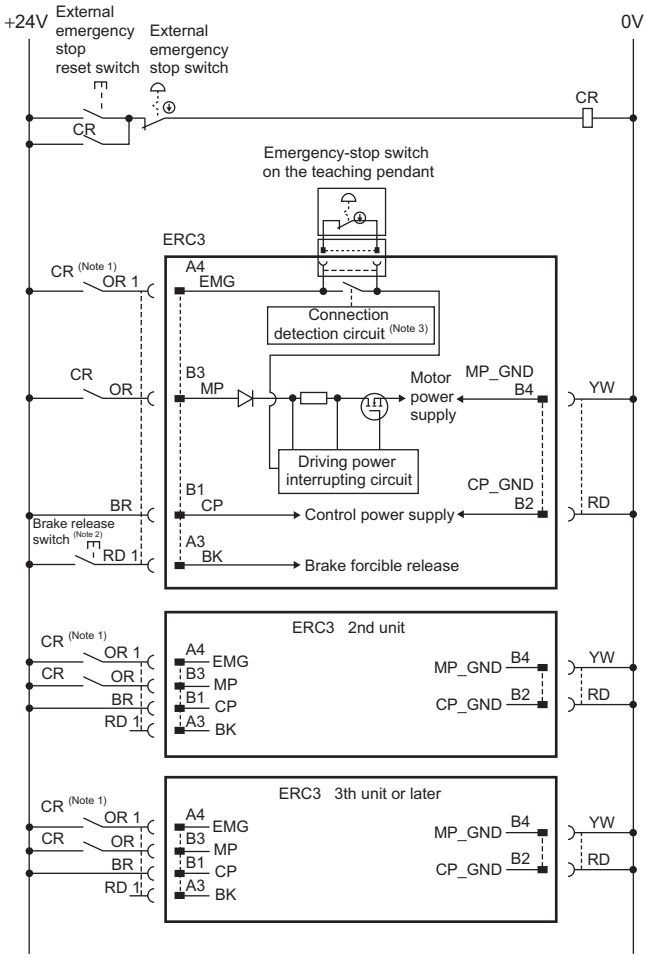

Note 1 The load current for the emergency stop signal EMG to turn ON/OFF at contact CR is 24V DC and 10mA.

Note 2 This is a switch to compulsorily release the brake of the actuator equipped with a brake. It is convenient when in maintenance or adjustment work if it is installed. It is necessary to have at least 24V DC and 150mA for the switch contact capacity.

Note 3 The controller automatically identifies that the teaching tool is connected and activates the emergency stop switch of the teaching pendant.

⚠ Caution:

- Do not attempt to shut the 0V circuit of MP_GND and CP_GND with the emergency stop. Doing so may burn the internal circuit. If an absolute shutoff of the power supply is required, conduct it on the primary side of DC power supply (alternating current side).
- The emergency stop switch of the teaching pendant cannot be reflected to the emergency stop circuit of the whole system.
- In case the power source for each controller is different, join the 0V of each power supply together.

[2] PIO Circuit

1) PIO Pattern 0 ····· 8-point Type

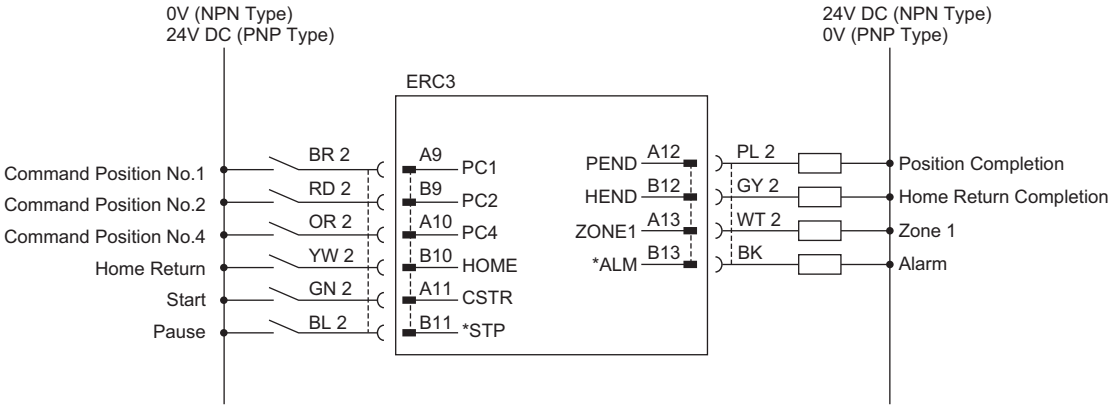

"*" in codes above shows the signal of the active low. Processing occurs when an input signal of the type is turned OFF. An output signal of the type is normally ON in the power-on status and turned OFF at signal output.

- For the connection of I/O, use the enclosed cable for those connections including the power supply and emergency stop circuit.
  Model : CB-ERC3P-PWBIO□□□ (□□□ indicates the cable length L. Example. 020 = 2m)

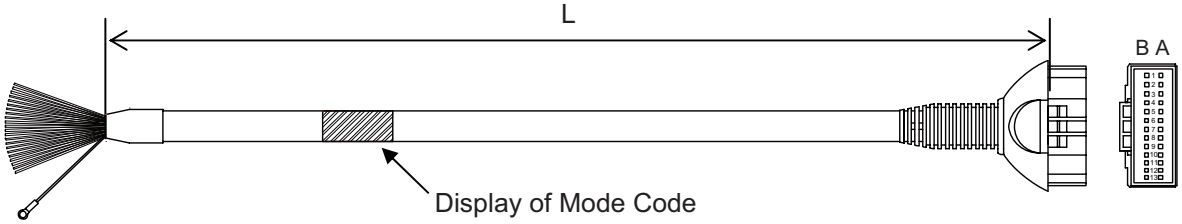

Pin No.	Wire Color	Signal Abbreviation	Width	Pin No.	Wire Color	Signal Abbreviation	Width
A1	Drain	FG	AWG22 (0.3mm^2)	B1	BR	CP	AWG22 (0.3mm^2)
A2	–	–	–	B2	RD	CP_GND	
A3	RD 1	BK	AWG28 (0.08mm^2)	B3	OR	MP	AWG19 (0.75mm^2)
A4	OR 1	EMG		B4	YW	MP_GND	
A5	–	–	–	B5	GN	–	AWG28 (0.08mm^2)
A6	–	–	–	B6	BR 1	–	
A7	BL	–	AWG28 (0.08mm^2)	B7	PL	–	
A8	GY	–		B8	WT	–	
A9	BR 2	PC1		B9	RD 2	PC2	
A10	OR 2	PC4		B10	YW 2	HOME	
A11	GN 2	CSTR		B11	BL 2	*STP	
A12	PL 2	PEND		B12	GY 2	HEND	
A13	WT 2	ZONE1		B13	BK	*ALM	

(Note) Wire color No.1 is colored with short-dotted line and No.2 with long-dotted line.

2) PIO Pattern 1 ····· Solenoid Valve Type

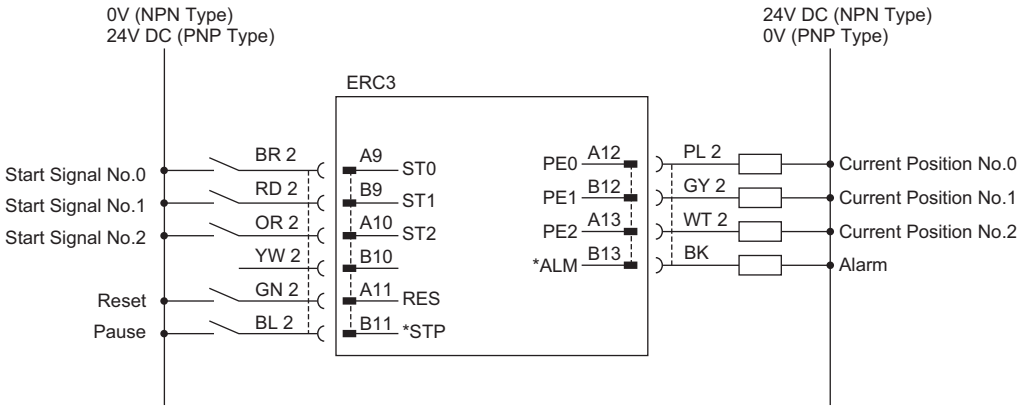

"*" in codes above shows the signal of the active low. Processing occurs when an input signal of the type is turned OFF. An output signal of the type is normally ON in the power-on status and turned OFF at signal output.

- Use the attached cable for the I/O connection.
  Model : CB-ERC3P-PWBIO□□□ (□□□ indicates the cable length L. Example. 020 = 2m)

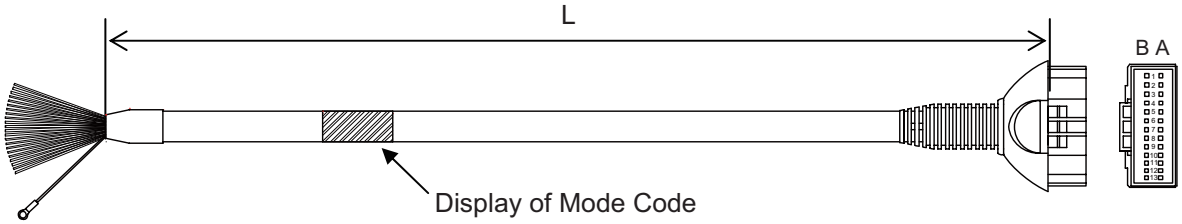

Pin No.	Wire Color	Signal Abbreviation	Width	Pin No.	Wire Color	Signal Abbreviation	Width
A1	Drain	FG	AWG22 (0.3mm^2)	B1	BR	CP	AWG22 (0.3mm^2)
A2	–	–	–	B2	RD	CP_GND	
A3	RD 1	BK	AWG28 (0.08mm^2)	B3	OR	MP	AWG19 (0.75mm^2)
A4	OR 1	EMG		B4	YW	MP_GND	
A5	–	–	–	B5	GN	–	AWG28 (0.08mm^2)
A6	–	–	–	B6	BR 1	–	
A7	BL	–	AWG28 (0.08mm^2)	B7	PL	–	
A8	GY	–		B8	WT	–	
A9	BR 2	ST0		B9	RD 2	ST1	
A10	OR 2	ST2		B10	YW 2	–	
A11	GN 2	RES		B11	BL 2	*STP	
A12	PL 2	PE0		B12	GY 2	PE1	
A13	WT 2	PE2		B13	BK	*ALM	

(Note) Wire color No.1 is colored with short-dotted line and No.2 with long-dotted line.

3) PIO Pattern 2 ····· 16-point Type

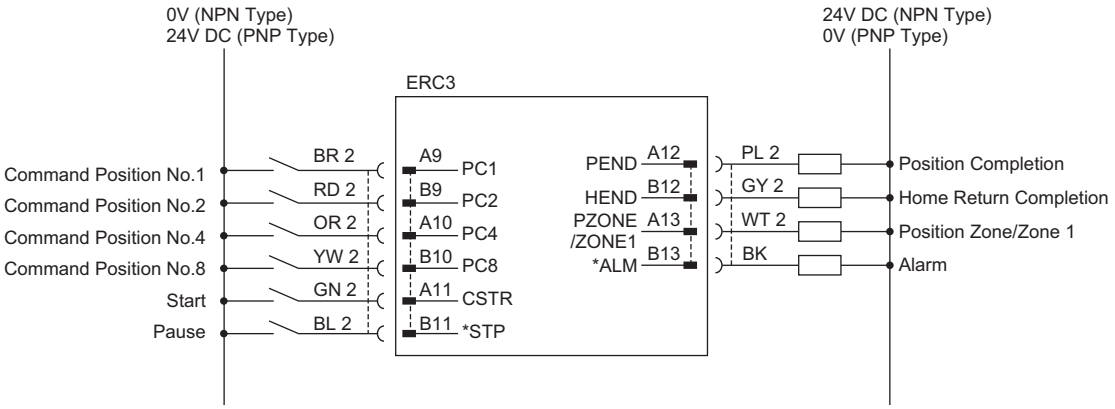

"*" in codes above shows the signal of the active low. Processing occurs when an input signal of the type is turned OFF. An output signal of the type is normally ON in the power-on status and turned OFF at signal output.

- Use the attached cable for the I/O connection.
  Model : CB-ERC3P-PWBIO□□□ (□□□ indicates the cable length L. Example. 020 = 2m)

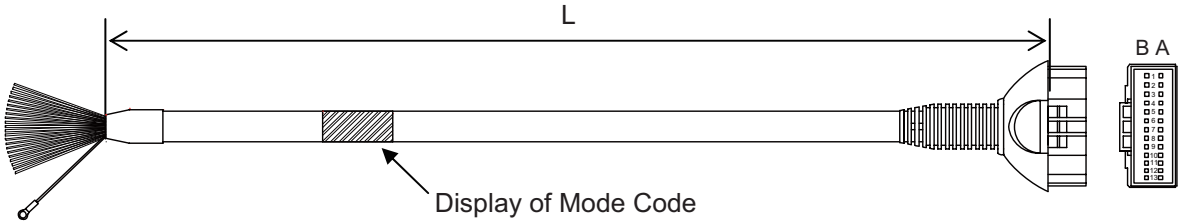

Pin No.	Wire Color	Signal Abbreviation	Width	Pin No.	Wire Color	Signal Abbreviation	Width
A1	Drain	FG	AWG22 (0.3mm^2)	B1	BR	CP	AWG22 (0.3mm^2)
A2	–	–	–	B2	RD	CP_GND	
A3	RD 1	BK	AWG28 (0.08mm^2)	B3	OR	MP	AWG19 (0.75mm^2)
A4	OR 1	EMG		B4	YW	MP_GND	
A5	–	–	–	B5	GN	–	AWG28 (0.08mm^2)
A6	–	–	–	B6	BR 1	–	
A7	BL	–	AWG28 (0.08mm^2)	B7	PL	–	
A8	GY	–		B8	WT	–	
A9	BR 2	PC1		B9	RD 2	PC2	
A10	OR 2	PC4		B10	YW 2	PC8	
A11	GN 2	CSTR		B11	BL 2	*STP	
A12	PL 2	PEND		B12	GY 2	HEND	
A13	WT 2	PZONE/ ZONE1		B13	BK	*ALM	

(Note) Wire color No.1 is colored with short-dotted line and No.2 with long-dotted line.

3.2 Pulse Train Control Mode

3.2.1 Wiring Diagram (Connection of construction devices)

I/O type of the model code is PLN or PLP.

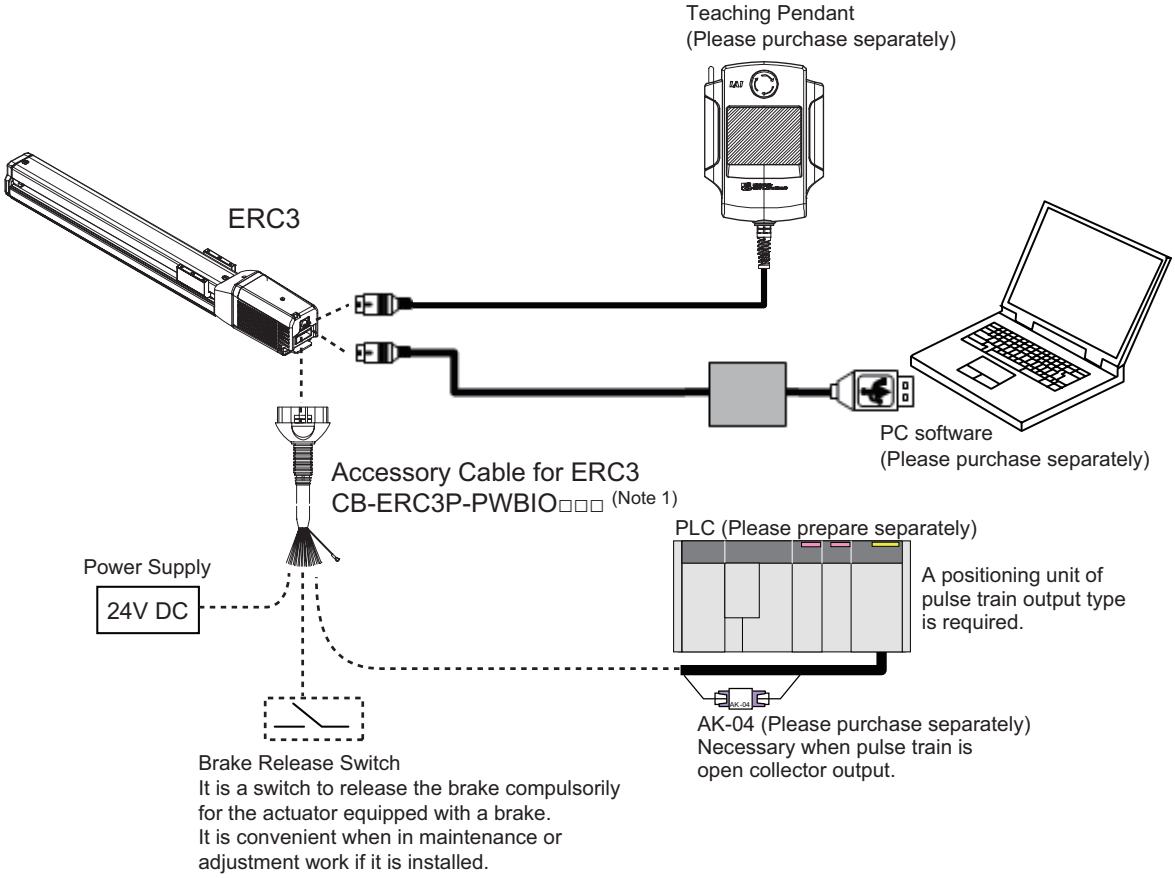

Note 1 □□□ indicates the cable length. (Example) 030 = 3m

3.2.2 PIO Pattern Selection and PIO Signal

[1] PIO Pattern (Control Pattern) Selection

There are two types of control method for the pulse train control. Set an appropriate PIO pattern suited to the use to Parameter No.25 “PIO Pattern Select”.
Refer to 4.3 Operation in Pulse Train Control Mode for the details of PIO patterns.

Type	Value set in parameter No.25	Mode	Overview
PIO Pattern 0	0 (at the delivery)	Positioning mode	• Positioning with Pulse Train
PIO Pattern 1	1	Pressing mode	• Positioning with Pulse Train • Pressing operation with torque control available

[2] PIO pattern and Signal Allocation

The signal assignment of cable by the PIO pattern is as shown below. Follow the following table to connect the external equipment (such as PLC).

Pin No.	Wire Color	Category	PIO Function	Parameter No.25 (PIO Pattern) Selection	
				0	1
				Positioning mode	Pressing mode
A1	Drain	Frame ground		FG	
B1	BR	Control power unit +24V		CP	
A2	–	–		–	
B2	RD	Control power unit 0V		CP_GND	
A3	RD 1	Brake release		BK	
B3	OR	Motor power unit +24V		MP	
A4	OR 1	Emergency-stop input		EMG	
B4	YW	Motor power unit 0V		MP_GND	
A5	–	–		–	
B5	GN	–		–	
A6	–	–		–	
B6	BR 1	–		–	
A7	BL	–		/PP	
B7	PL	–		PP	
A8	GY	–		/NP	
B8	WT	–		NP	
A9	BR 2	Input	IN0	SON	SON
B9	RD 2		IN1	TL	TL
A10	OR 2		IN2	HOME	HOME
B10	YW 2		IN3	RES	RES/DCLR
A11	GN 2		IN4	–	–
B11	BL 2		IN5	–	–
A12	PL 2	Output	OUT0	SV	SV
B12	GY 2		OUT1	INP	INP/TLR
A13	WT 2		OUT2	HEND	HEND
B13	BK		OUT3	*ALM	*ALM

Signal with “*” expresses the signal of active low.

(Reference) Signal of Active Low
Signal with “*” expresses the signal of active low. A signal of active low is a signal that the input signal is processed when it is turned OFF, output signal is ordinary ON while the power is ON, and turns OFF when the signal is output.

[3] List of PIO Signals

The table below lists the functions of PIO signals. Refer to the section shown in Relevant Sections for the details of the control of each signal.

Category	Signal Abbreviation	Signal Name	Function Description	Relevant Sections
Input	EMG	Emergency Stop Input	It shuts the motor power supply.	4.3 [3]
	BK	Brake Forcible Release	The brake will forcibly be released.	4.3 [4]
	PP	Differential Pulse Train Input (+)	Input the pulse train from the host controller.	4.3 [7]
	/PP			
	NP	Differential Pulse Train Input (-)		
	/NP			
	SON	Servo ON	Servo is ON while this signal is turned ON.	4.3 [6]
	TL	Torque Limit Select	Applies torque limit to the motor with the signal on and the value set to the parameter.	4.3 [7]
	HOME	Home Return	The controller will perform home return operation when this signal is turned ON.	4.3 [6]
	RES	Reset	When Parameter No. 25 = 0 (Positioning mode) An alarm will be reset when this signal is turned ON.	4.3 [6]
			When Parameter No. 25 = 1 (Pressing mode) Alarm reset is conducted with this signal being ON when TL signal is not ON.	4.3 [6]
	DCLR	Deviation Counter Clear	Have the deviation counter reset with this signal being ON.	4.3 [7]
Output	SV	Servo ON Status	This signal will remain ON while the servo is ON.	4.3 [6]
	INP	Positioning Completion	It is turned ON when the remaining movement pulse amount in the deviation counter is in the positioning width range.	4.3 [6]
	TLR	Torque Under Control	Turns ON when torque reaches the limit while in torque restriction (TL signal is ON).	4.3 [7]
	HEND	Home Return Completion	This signal will turn ON when home return has been completed. It will be kept ON unless the home position is lost.	4.3 [6]
	*ALM	Alarm	Turns ON when the controller is in normal condition, and turns OFF when an alarm is generated.	4.3 [6]

Signal with "*" expresses the signal of active low. It is ON when the power is applied to the controller, and turns OFF when the signal is output.

⚠ Caution: Torque restriction by TL Signal is available even if Parameter No.25 = 0. Thus, it is possible to have a positioning move with the torque restricted in such cases as when pushing out a breakable work piece. However, when it comes to a situation that the actuator cannot move, it may create a big deviation (servo lag pulses) as it may occur for the pressing control. If TL Signal is turned off under this condition, the operation may be started with the maximum torque at the same time, and make a sudden move. If it is not to be used, set User Parameter No.61 Torque Restriction Command Input to invalid (= 1).
If Parameter No.25 = 0, the deviation counter cannot be cleared since there is no DCLR Signal. Move to the opposite side or turn the servo OFF if a movement cannot be made any more.

3.2.3 Circuit Diagram

Sample circuit diagrams are shown below.

[1] Power Line and Emergency Stop Circuit

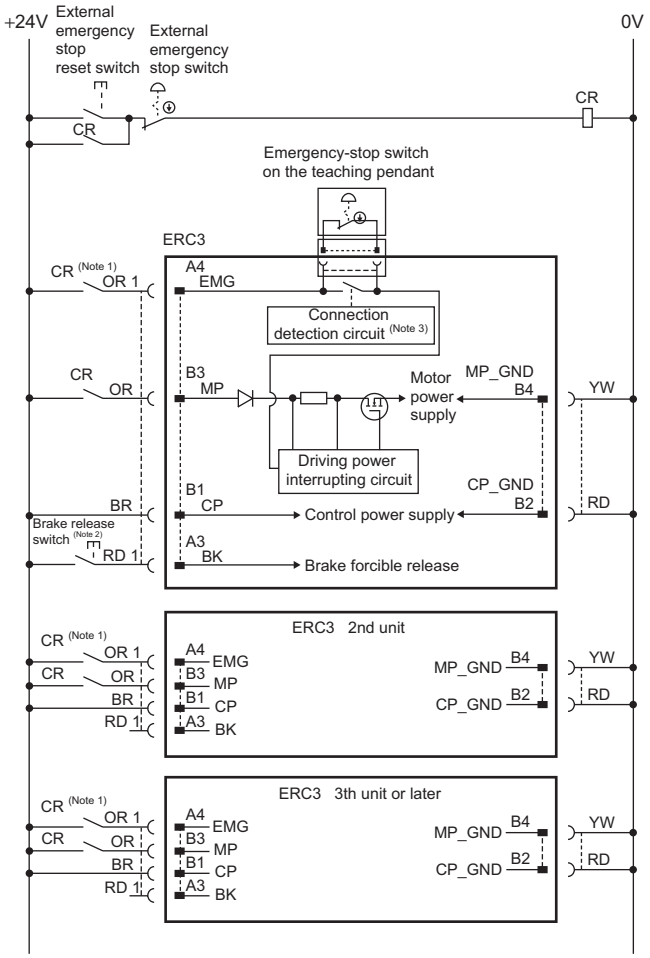

Note 1 The load current for the emergency stop signal EMG to turn ON/OFF at contact CR is 24V DC and 10mA.

Note 2 This is a switch to compulsorily release the brake of the actuator equipped with a brake. It is convenient when in maintenance or adjustment work if it is installed. It is necessary to have at least 24V DC and 150mA for the switch contact capacity.

Note 3 The controller automatically identifies that the teaching tool is connected and activates the emergency stop switch of the teaching pendant.

⚠ Caution:

- Do not attempt to shut the 0V circuit of MP_GND and CP_GND with the emergency stop. Doing so may burn the internal circuit. If an absolute shutoff of the power supply is required, conduct it on the primary side of DC power supply (alternating current side).
- The emergency stop switch of the teaching pendant cannot be reflected to the emergency stop circuit of the whole system.
- In case the power source for each controller is different, join the 0V of each power supply together.

[2] Command Pulse Train Circuit

(1) When Host Unit is Differential System

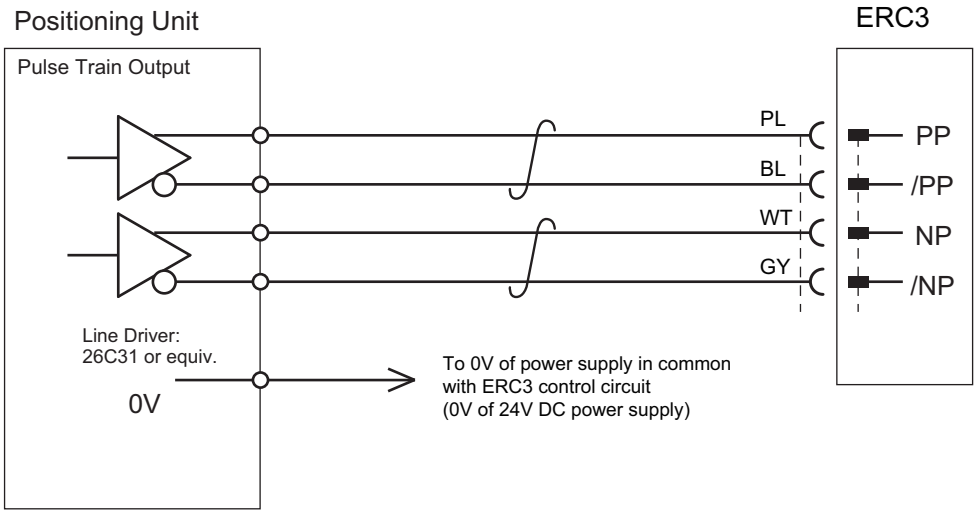

(2) When Host Unit is Open Collector System

AK-04 (please purchase separately) is required for pulse train input.

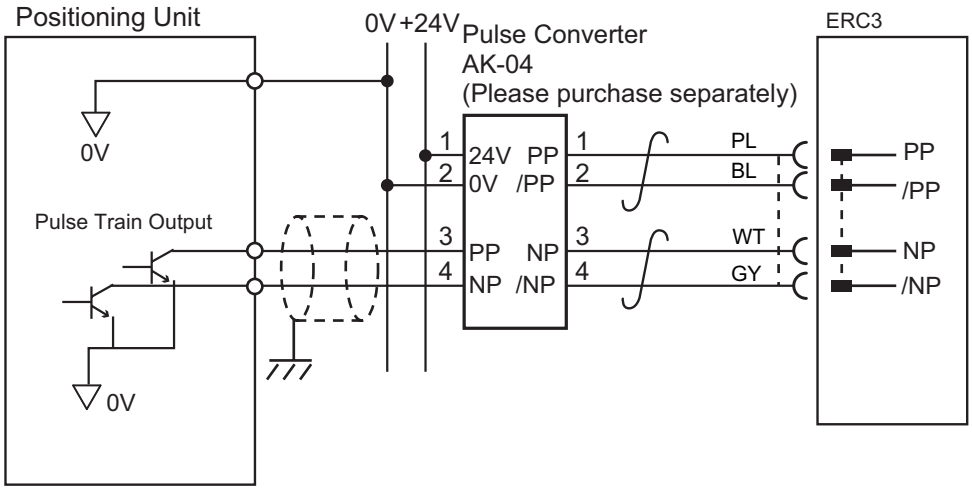

⚠ Caution: Use the same power source for the host open collector input and output, AK-04.

[3] PIO Circuit

(1) PIO Pattern 0 ····· Positioning mode

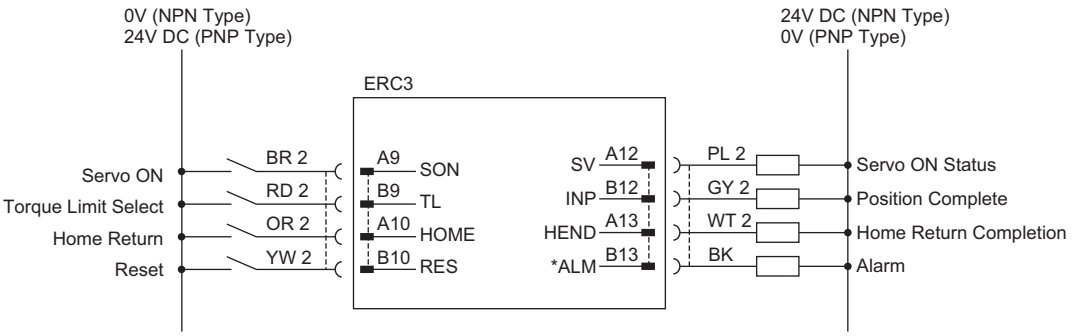

"*" in codes above shows the signal of the active low. Processing occurs when an input signal of the type is turned OFF. An output signal of the type is normally ON in the power-on status and turned OFF at signal output.

- For the connection of I/O, use the enclosed cable for those connections including the emergency stop and pulse train input circuit.
  Model : CB-ERC3P-PWBIO□□□ (□□□ indicates the cable length L. Example. 020 = 2m)

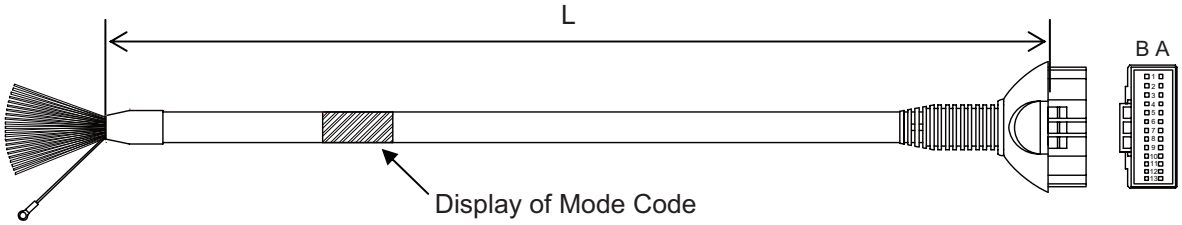

Pin No.	Wire Color	Signal Abbreviation	Width	Pin No.	Wire Color	Signal Abbreviation	Width
A1	Drain	FG	AWG22 (0.3mm^2)	B1	BR	CP	AWG22 (0.3mm^2)
A2	–	–	–	B2	RD	CP_GND	
A3	RD 1	BK	AWG28 (0.08mm^2)	B3	OR	MP	AWG19 (0.75mm^2)
A4	OR 1	EMG		B4	YW	MP_GND	
A5	–	–	–	B5	GN	–	AWG28 (0.08mm^2)
A6	–	–	–	B6	BR 1	–	
A7	BL	–	AWG28 (0.08mm^2)	B7	PL	–	
A8	GY	–		B8	WT	–	
A9	BR 2	SON1		B9	RD 2	TL	
A10	OR 2	HOME		B10	YW 2	RES	
A11	GN 2	–		B11	BL 2	–	
A12	PL 2	SV		B12	GY 2	INP	
A13	WT 2	HEND		B13	BK	*ALM	

(Note) Wire color No.1 is colored with short-dotted line and No.2 with long-dotted line.

(2) PIO Pattern 1 ····· Pressing mode

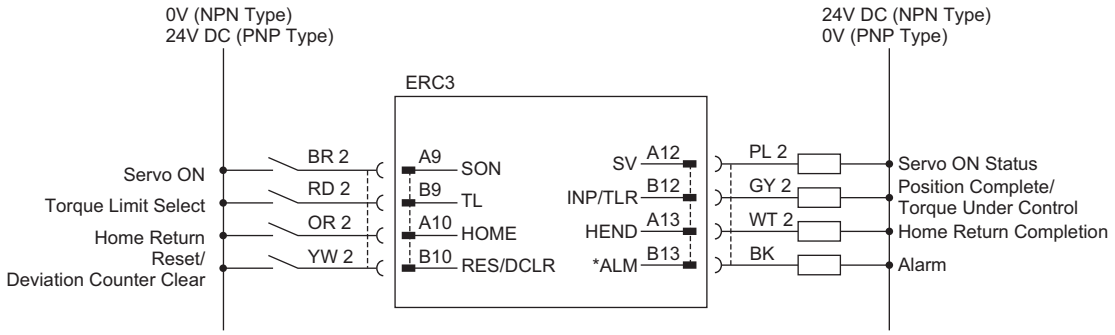

"*" in codes above shows the signal of the active low. Processing occurs when an input signal of the type is turned OFF. An output signal of the type is normally ON in the power-on status and turned OFF at signal output.

- Use the attached cable for the I/O connection.
  Model : CB-ERC3P-PWBIO□□□ (□□□ indicates the cable length L. Example. 020 = 2m)

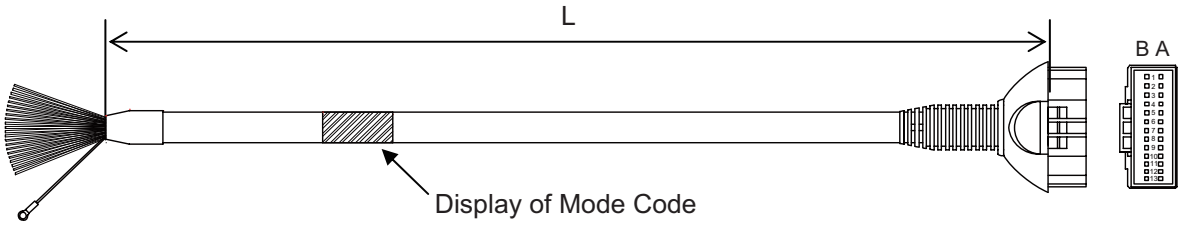

Pin No.	Wire Color	Signal Abbreviation	Width	Pin No.	Wire Color	Signal Abbreviation	Width
A1	Drain	FG	AWG22 (0.3mm^2)	B1	BR	CP	AWG22 (0.3mm^2)
A2	–	–	–	B2	RD	CP_GND	
A3	RD 1	BK	AWG28 (0.08mm^2)	B3	OR	MP	AWG19 (0.75mm^2)
A4	OR 1	EMG		B4	YW	MP_GND	
A5	–	–	–	B5	GN	–	AWG28 (0.08mm^2)
A6	–	–	–	B6	BR 1	–	
A7	BL	–	AWG28 (0.08mm^2)	B7	PL	–	
A8	GY	–		B8	WT	–	
A9	BR 2	SON1		B9	RD 2	TL	
A10	OR 2	HOME		B10	YW 2	RES/ DCLR	
A11	GN 2	–		B11	BL 2	–	
A12	PL 2	SV		B12	GY 2	INP/ TLR	
A13	WT 2	HEND		B13	BK	*ALM	

(Note) Wire color No.1 is colored with short-dotted line and No.2 with long-dotted line.

3.3 Positioner Mode 2 (Extension Type by PIO Converter)

3.3.1 Wiring Diagram (Connection of construction devices)

The model code for I/O type of ERC3 is SE (SIO type).

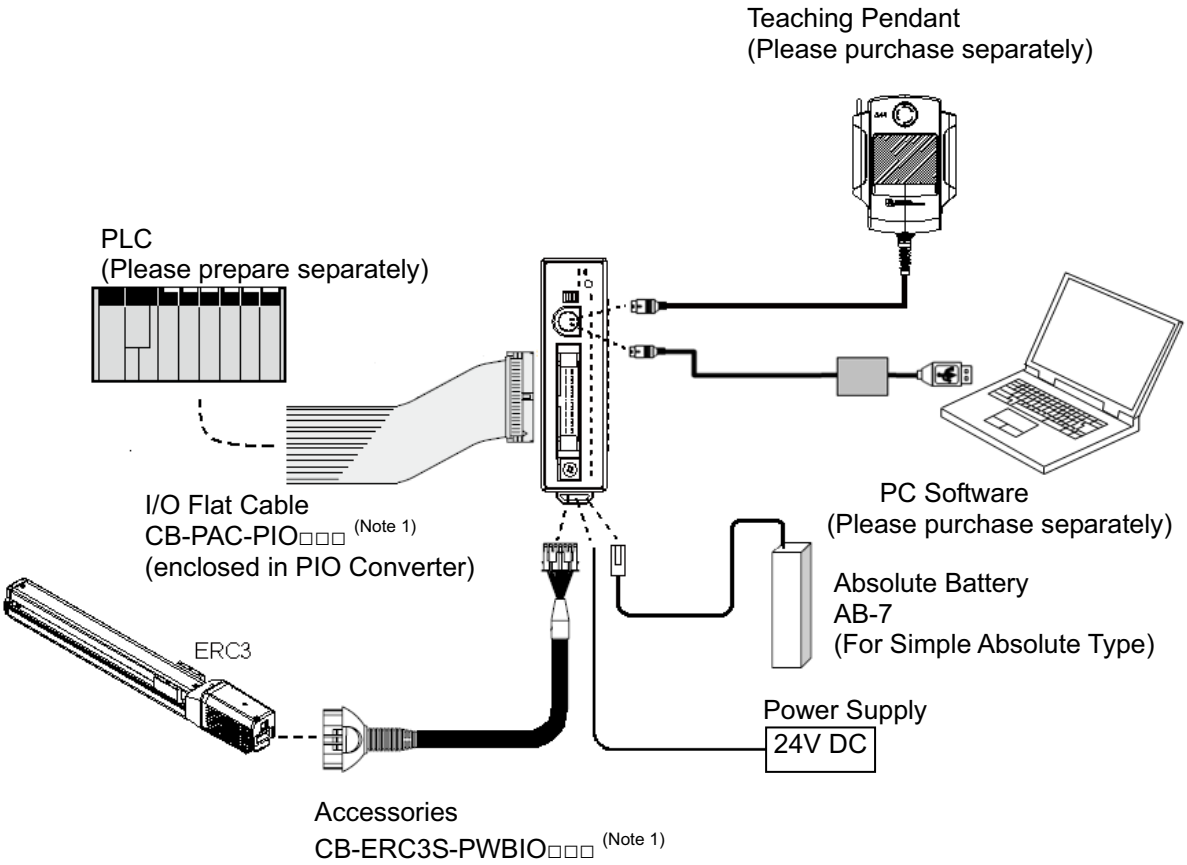

Note 1 □□□ indicates the cable length. (Example) 030 = 3m

3.3.2 PIO Pattern Selection and PIO Signal

[1] PIO Pattern (Control Pattern) Selection

PIO Converter can extend the positioner function of ERC3, and enables to have 6 types of control methods. Set the suitable PIO pattern to Parameter No.25 “PIO Pattern Select”. Check the 4.2.3 Operation in Positioner Mode 2 for the details of PIO Patterns.

Type	Value set in parameter No.25	Mode	Overview
PIO Pattern 0	0 (at the delivery)	Positioning mode (Standard type)	• Number of positioning points : 64 points • Position command : binary code • Zone signal output*1 : 1 point • Position zone signal output*2 : 1 point (Note 1)
PIO Pattern 1	1	Teaching mode (Teaching type)	• Number of positioning points : 64 points • Position command : binary code • Position zone signal output*2 : 1 point (Note 1) • Writing current position data to position table enabled by PIO signal
PIO Pattern 2	2	256-point mode (Number of positioning points : 256-point type)	• Number of positioning points : 256 points • Position command : binary code • Position zone signal output*2 : 1 point (Note 1)
PIO Pattern 3	3	512-point mode (Number of positioning points : 512-point type)	• Number of positioning points : 512 points • Position command : binary code • Zone signal output : None
PIO Pattern 4	4	Solenoid valve mode 1 (7-point type)	• Number of positioning points : 7 points • Position command : Individual number signal ON • Zone signal output*1 : 1 point • Position zone signal output*2 : 1 point (Note 1)
PIO Pattern 5	5	Solenoid valve mode 2 (3-point type)	• Number of positioning points : 3 points • Position command : Individual number signal ON • Completion signal : Signal equivalent to LS (limit switch) enabled • Zone signal output*1 : 1 point • Position zone signal output*2 : 1 point (Note 1)

Note 1 The position zone signal output can be switched over to the zone signal output with the setting of Parameter No.149.

*1 Zone signal output : Zone range is to be set to either Parameter No.1, 2 and it is always available after the home-return operation is complete.

*2 Position zone signal output : This feature is associated with the specified position number. The zone range is set in the position table. The zone range is enabled only when the position is specified but disabled if another position is specified.

[2] PIO Patterns and Signal Assignment

The signal assignment of cable by the PIO pattern is as shown below. Follow the following table to connect the external equipment (such as PLC).

Pin No.	Wire Color	Category	PIO Functions	Parameter No.25 (PIO Pattern) Selection		
				0	1	2
				Positioning mode	Teaching mode	256-point mode
		Input	Number of positioning points	64 points	64 points	256 points
			Home return signal	○	○	○
			Jog signal	×	○	×
			Teaching signal (Current position writing)	×	○	×
			Brake release	○	×	○
		Output	Moving signal	○	○	×
			Zone signal	○	×	×
			Position zone signal	○	○	○
1A	BR-1	–	–			
2A	RD-1	–	–			
3A	OR-1	–	–			
4A	YW-1	–	–			
5A	GN-1	Input	IN0	PC1	PC1	PC1
6A	BL-1		IN1	PC2	PC2	PC2
7A	PL-1		IN2	PC4	PC4	PC4
8A	GY-1		IN3	PC8	PC8	PC8
9A	WT-1		IN4	PC16	PC16	PC16
10A	BK-1		IN5	PC32	PC32	PC32
11A	BR-2		IN6	–	MODE	PC64
12A	RD-2		IN7	–	JISL	PC128
13A	OR-2		IN8	–	JOG+	–
14A	YW-2		IN9	BKRL	JOG-	BKRL
15A	GN-2		IN10	–	–	–
16A	BL-2		IN11	HOME	HOME	HOME
17A	PL-2		IN12	*STP	*STP	*STP
18A	GY-2		IN13	CSTR	CSTR/PWRT	CSTR
19A	WT-2		IN14	RES	RES	RES
20A	BK-2		IN15	SON	SON	SON
1B	BR-3	Output	OUT0	PM1(ALM1)	PM1(ALM1)	PM1(ALM1)
2B	RD-3		OUT1	PM2(ALM2)	PM2(ALM2)	PM2(ALM2)
3B	OR-3		OUT2	PM4(ALM4)	PM4(ALM4)	PM4(ALM4)
4B	YW-3		OUT3	PM8(ALM8)	PM8(ALM8)	PM8(ALM8)
5B	GN-3		OUT4	PM16	PM16	PM16
6B	BL-3		OUT5	PM32	PM32	PM32
7B	PL-3		OUT6	MOVE	MOVE	PM64
8B	GY-3		OUT7	ZONE1	MODES	PM128
9B	WT-3		OUT8	PZONE/ZONE2	PZONE/ZONE1	PZONE/ZONE1
10B	BK-3		OUT9	–	–	–
11B	BR-4		OUT10	HEND	HEND	HEND
12B	RD-4		OUT11	PEND	PEND/WEND	PEND
13B	OR-4		OUT12	SV	SV	SV
14B	YW-4		OUT13	*EMGS	*EMGS	*EMGS
15B	GN-4		OUT14	*ALM	*ALM	*ALM
16B	BL-4		OUT15	*ALML	*ALML	*ALML
17B	PL-4	–	–			
18B	GY-4	–	–			
19B	WT-4	–	–			
20B	BK-4	–	–			

Signal with "*" expresses the signal of active low.
PM1 to PM8 are the binary code output signals of an alarm while it is being generated. [Refer to 4.2.3 [5]]
PZONE (position zone signal) can be switched over to ZONE (zone signal) with the setting of Parameter No.149.

(Reference) Signal of Active Low
Signal with "*" expresses the signal of active low. A signal of active low is a signal that the input signal is processed when it is turned OFF, output signal is ordinary ON while the power is ON, and turns OFF when the signal is output.

Pin No.	Wire Color	Category	PIO Functions	Parameter No.25 (PIO Pattern) Selection		
				3	4	5
				512-point mode	Solenoid valve mode 1	Solenoid valve mode 2
		Input	Number of positioning points	512 points	7 points	3 points
			Home return signal	○	○	×
			Jog signal	×	×	×
			Teaching signal (Current position writing)	×	×	×
			Brake release	○	○	○
		Output	Moving signal	×	×	×
			Zone signal	×	○	○
			Position zone signal	×	○	○
1A	BR-1	–	–			
2A	RD-1	–	–			
3A	OR-1	–	–			
4A	YW-1	–	–			
5A	GN-1	Input	IN0	PC1	ST0	ST0
6A	BL-1		IN1	PC2	ST1	ST1(JOG+)
7A	PL-1		IN2	PC4	ST2	ST2 (Note 1)
8A	GY-1		IN3	PC8	ST3	–
9A	WT-1		IN4	PC16	ST4	–
10A	BK-1		IN5	PC32	ST5	–
11A	BR-2		IN6	PC64	ST6	–
12A	RD-2		IN7	P128	–	–
13A	OR-2		IN8	PC256	–	–
14A	YW-2		IN9	BKRL	BKRL	BKRL
15A	GN-2		IN10	–	–	–
16A	BL-2		IN11	HOME	HOME	–
17A	PL-2		IN12	*STP	*STP	–
18A	GY-2		IN13	CSTR	–	–
19A	WT-2		IN14	RES	RES	RES
20A	BK-2		IN15	SON	SON	SON
1B	BR-3	Output	OUT0	PM1(ALM1)	PE0	LSO
2B	RD-3		OUT1	PM2(ALM2)	PE1	LS1(TRQS)
3B	OR-3		OUT2	PM4(ALM4)	PE2	LS2 (Note 1)
4B	YW-3		OUT3	PM8(ALM8)	PE3	–
5B	GN-3		OUT4	PM16	PE4	–
6B	BL-3		OUT5	PM32	PE5	–
7B	PL-3		OUT6	PM64	PE6	–
8B	GY-3		OUT7	PM128	ZONE1	ZONE1
9B	WT-3		OUT8	PM256	PZONE/ZONE2	PZONE/ZONE2
10B	BK-3		OUT9	–	–	–
11B	BR-4		OUT10	HEND	HEND	HEND
12B	RD-4		OUT11	PEND	PEND	–
13B	OR-4		OUT12	SV	SV	SV
14B	YW-4		OUT13	*EMGS	*EMGS	*EMGS
15B	GN-4		OUT14	*ALM	*ALM	*ALM
16B	BL-4		OUT15	*ALML	*ALML	*ALML
17B	PL-4	–	–			
18B	GY-4	–	–			
19B	WT-4	–	–			
20B	BK-4	–	–			

Signal with "*" expresses the signal of active low.
PM1 to PM8 are the binary code output signals of an alarm while it is being generated. [Refer to 4.2.3 [5]]
PZONE (position zone signal) can be switched over to ZONE (zone signal) with the setting of Parameter No.149.

Note 1 It is invalid before home-return operation.

(Reference) Signal of Active Low
Signal with "*" expresses the signal of active low. A signal of active low is a signal that the input signal is processed when it is turned OFF, output signal is ordinary ON while the power is ON, and turns OFF when the signal is output.

[3] List of PIO Signals

The table below lists the functions of PIO signals. The detail of each signal is provided in this chapter. Refer to the relevant sections shown in the list below.

Category	Signal Abbreviation	Signal Name	Function Description	Relevant Sections
Input	CSTR	PTP Strobe (Start signal)	The actuator will start to move to the position set by the command position number.	4.2.3 [6]
	PC1 to PC256	Command Position Number	Input (in binary) a number of the position that is desired to move.	4.2.3 [6]
	BKRL	Brake Forcible Release	The brake will forcibly be released.	4.2.3 [5]
	*STP	Pause	When this signal is turned OFF while in move, the actuator decelerates and then stops. The remaining movement is in a hold while the actuator is stopped and will resume when the signal turns back ON.	4.2.3 [6]
	RES	Reset	An alarm will be reset when this signal is turned ON. Also, when it is turned ON in the pause mode (*STP is turned OFF), the remaining movement amount can be cancelled.	4.2.3 [5]
	SON	Servo ON	The servo remains ON while this signal is ON, or OFF while this signal is OFF.	4.2.3 [5]
	HOME	Home Return	The controller will perform home return operation when this signal is turned ON.	4.2.3 [5]
	MODE	Teaching Mode	The operating mode will change to the teaching mode when this signal is turned ON. It cannot be switched over unless all of CSTR, JOG+ and JOG- since the actuator is in a stop condition (excluding the pause condition).	4.2.3 [6]
	JISL	Jog/Inching Selector	Jog Operation can be performed with JOG+ and JOG- while this signal is OFF. Inching Operation is performed with JOG+ and JOG- when it is ON.	4.2.3 [6]
	JOG + JOG -	Jog	JOG operation is performed to the positive direction when JOG+ Signal is ON and to negative when JOG- Signal is ON while JISL Signal is turned OFF. Inching operation will be performed to the positive direction when JOG+ Signal is ON and to negative when JOG- Signal is ON while JISL Signal is turned ON.	4.2.3 [6]
	PWRT	Current Position Write	While in Teaching Mode, if the command position number (PC1 to PC32) is indicated and this signal is turned ON for 26ms or more, the current position is written to the indicated position number.	4.2.3 [6]
	ST0 to ST6	Start Signal	With the start signal of each position, while in Electromagnetic Valve Mode, the actuator moves to the position corresponding to the start signal if this signal is turned ON.	4.2.3 [7], [8]

Category	Signal Abbreviation	Signal Name	Function Description	Relevant Sections
Output	PEND/INP	Position Complete	Turns ON in the positioning width range after actuator operation. The INP signal will turn OFF if the position deviation exceeds the in-position range. PEND and INP can be switched over by the parameter.	4.2.3 [6], [7]
	PM1 to PM256	Completion Position No.	The position No. reached after the positioning completion, is output (binary output).	4.2.3 [6]
	HEND	Home Return Completion	This signal will turn ON when home return has been completed. It will be kept ON unless the home position is lost.	4.2.3 [5]
	ZONE1 ZONE2	Zone	Turns ON if the current actuator position is within the range set to the parameter.	4.2.3 [5]
	PZONE	Position Zone	This signal will turn ON when the current actuator position enters the range specified the position data after position movement. Even though it can be used together with ZONE1, PZONE will become only available for operation by the set position number.	4.2.3 [5]
	*ALM	Alarm	Turns ON when the controller is in normal condition, and turns OFF when an alarm is generated.	4.2.3 [5]
	ALM1 to ALM8	Alarm Code	The detail of the alarm is output with binary code when an alarm more than the operation cancel level is issued.	4.2.3 [5]
	MOVE	Moving	Turns ON during the actuator is moving (including home-return operation and pressing operation).	4.2.3 [6]
	SV	Servo ON	This signal will remain ON while the servo is ON.	4.2.3 [5]
	*EMGS	Emergency Stop Output	This signal remains ON while the controller is under the emergency stop reset condition and turns OFF when the emergency stop condition is enabled. (Regardless of alarms.)	4.2.3 [5]
	MODES	Teaching Mode Output	This signal will turn ON while the teaching mode is enabled by the input of the MODE signal and will turn OFF when the mode changes to the normal mode.	4.2.3 [6]
	WEND	Writing Complete	This is a signal effective while in Teaching Mode, and is turned ON when the writing by PWRT signal is complete, and turned OFF at the same time as PWRT signal is turned OFF.	4.2.3 [6]
	PE0 to PE6	Current Position Number	In the solenoid valve mode, this signal will turn ON when the actuator completes moving to the target position.	4.2.3 [7]
	LS0 to LS2	Limit Switch Output	Turns ON when the current actuator position is within the range of positioning width (±) of the target position. It is output even before the movement command and the servo is OFF if the home-return operation is completed.	4.2.3 [8]
	*ALML	Light Error Output	Outputs when a message level alarm is generated. (It is necessary to set parameter) It is ON in the normal condition, and turned OFF when an alarm is issued.	4.4

Signal with "*" expresses the signal of active low. The controller executes the command when the input signal is OFF. The output should normally be ON in a condition that the power is supplied and OFF in the signal output.

3.3.3 Circuit Diagram

Sample circuit diagrams are shown below.

[1] Power Line and Emergency Stop Circuit

(1) Built-in Drive Cutoff Relay Type

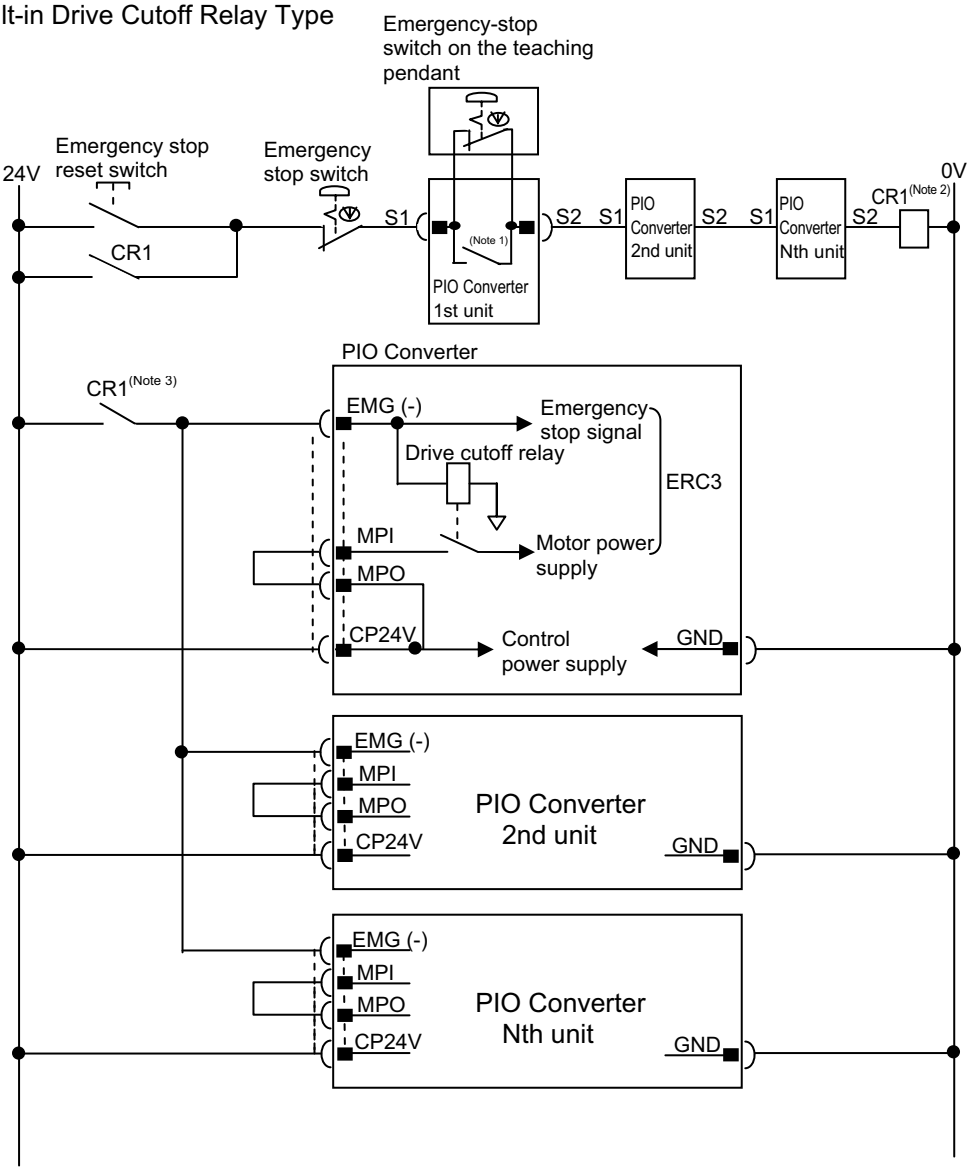

Note 1 When the teaching pendant is not connected, S1 and S2 become short-circuited inside the controller.

Note 2 For CR1, select the one with coil current 0.1A or less.

Note 3 This circuit is equivalent to Safety Category 1.
The load current for the emergency stop signal EMG (-) to turn ON/OFF at contact CR1 is 24V DC and 20mA.

⚠ Caution:

- Do not attempt to cut the 0V circuit of GND whit the emergency stop. Doing so may burn the internal circuit. If an absolute shutoff of the power supply is required, conduct it on the primary side of DC power supply (alternating current side).
- In case the power source for each controller is different, join the 0V of each power supply together.

(2) External Drive Cutoff Relay Type

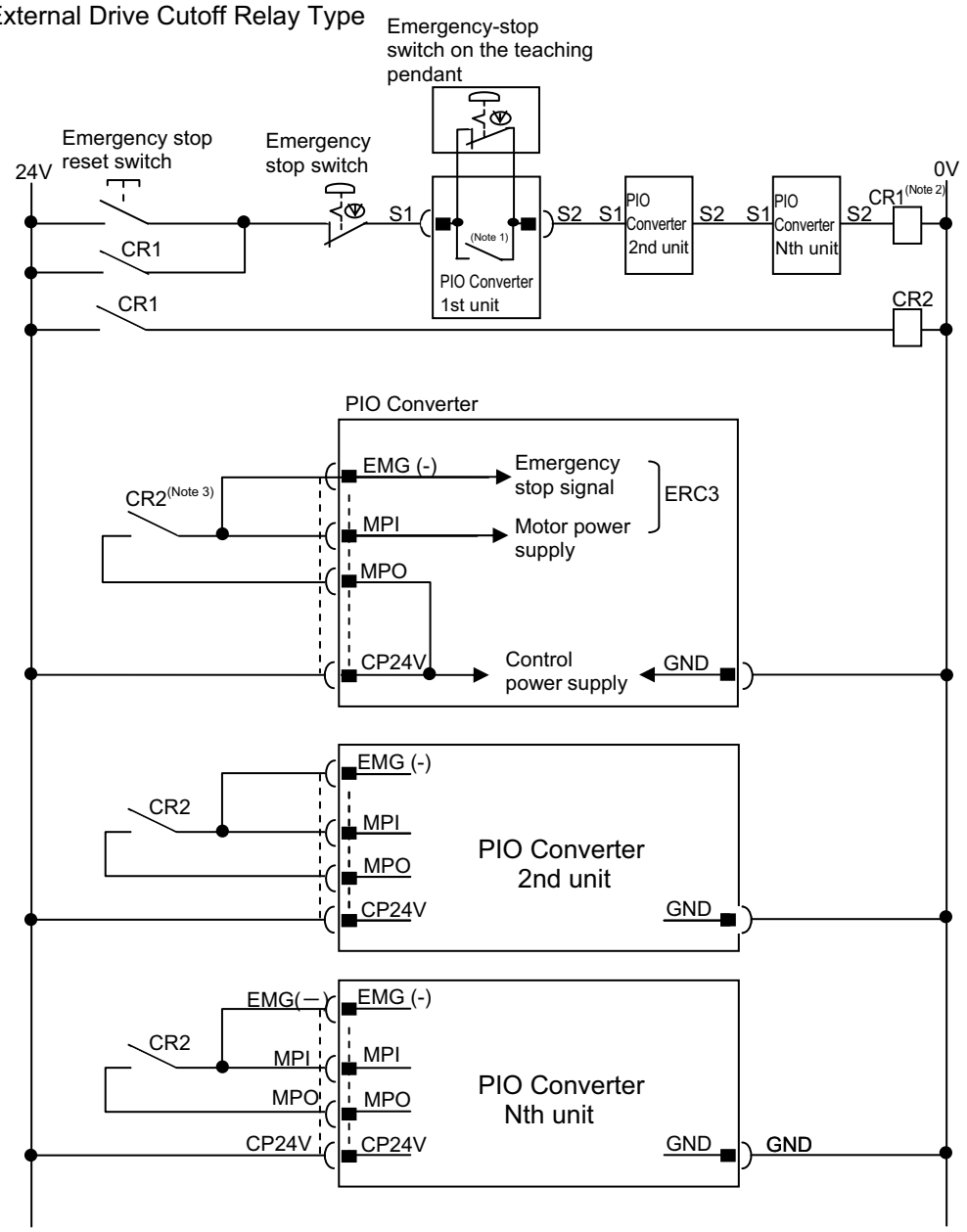

Note 1 When the teaching pendant is not connected, S1 and S2 become short-circuited inside the controller.

Note 2 For CR1, select the one with coil current 0.1A or less.

Note 3 The motor driving power line MPI that is to be turned ON/OFF at contact CR2 and the load current of the emergency stop signal EMG(-) are follows;

Load current	ERC3 high output setting valid: 3.5A (MAX. 4.2A)
	ERC3 high output setting invalid: 2.0A
During in-rush	8.3A

[Refer to 10.3 for the compliance with Safety Categories.]

⚠ Caution:

- Do not attempt to cut the 0V circuit of GND whit the emergency stop. Doing so may burn the internal circuit. If an absolute shutoff of the power supply is required, conduct it on the primary side of DC power supply (alternating current side).
- In case the power source for each controller is different, join the 0V of each power supply together.

[2] PIO Converter to ERC3

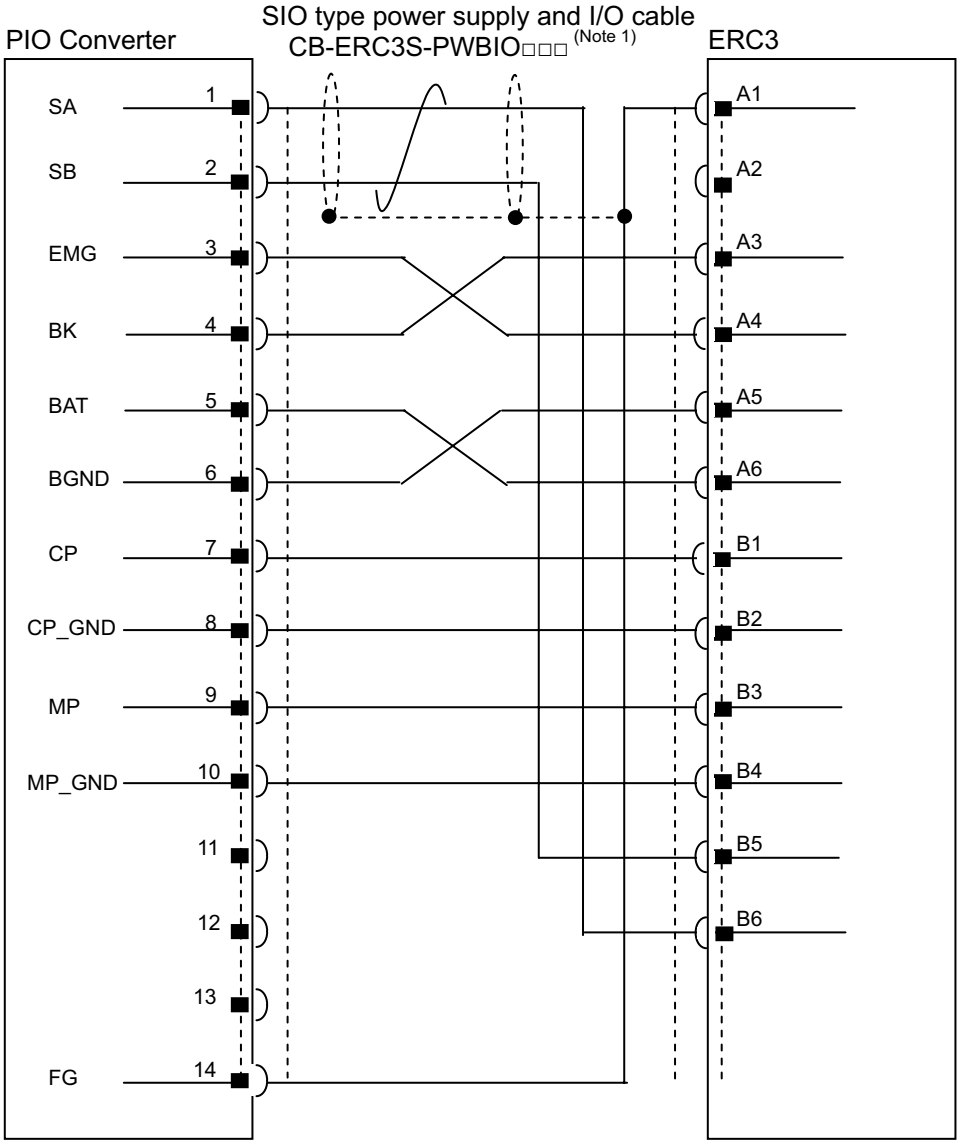

Note 1 □□□ indicates the cable length. (Example) 030 = 3m

[3] PIO Circuit

1) PIO Pattern 0 ····· Positioning mode (Standard type)

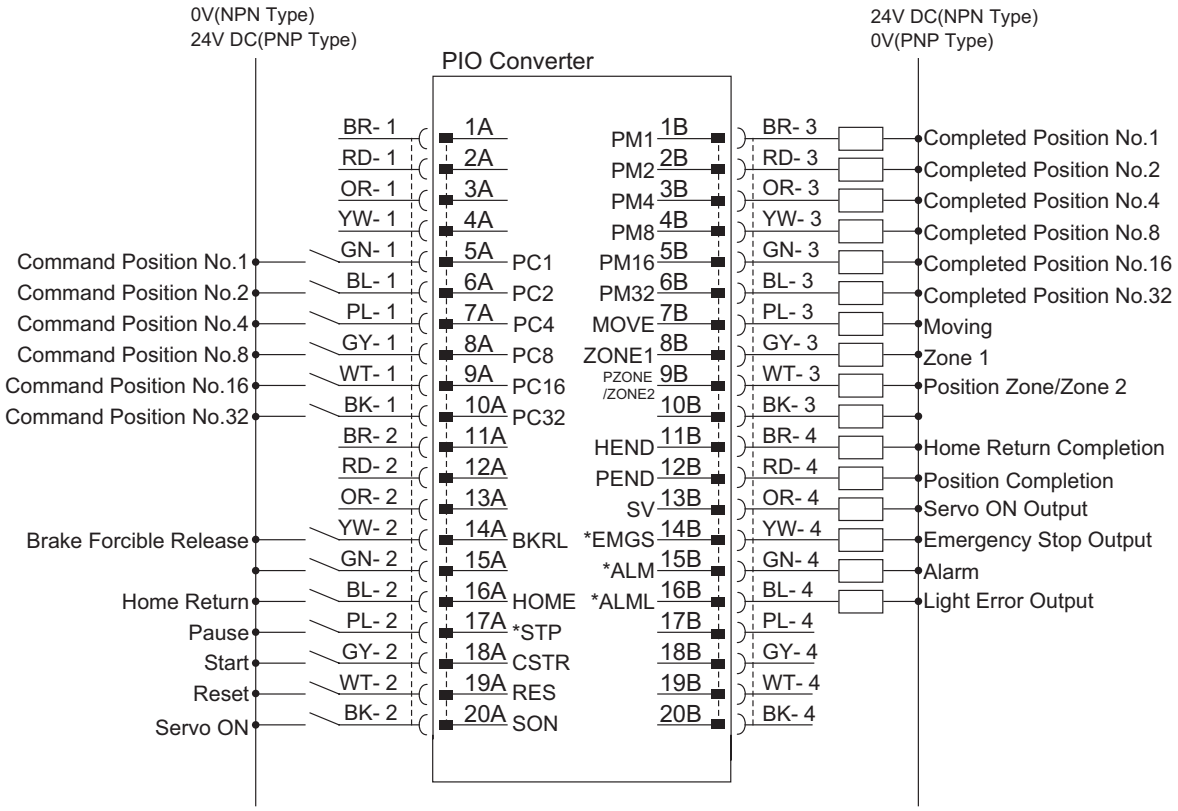

"*" in codes above shows the signal of the active low. Processing occurs when an input signal of the type is turned OFF. An output signal of the type is normally ON in the power-on status and turned OFF at signal output.

- Use the attached cable for the I/O connection.
  Model : CB-PAC-PIO□□□ (□□□ indicates the cable length L. Example. 020 = 2m)

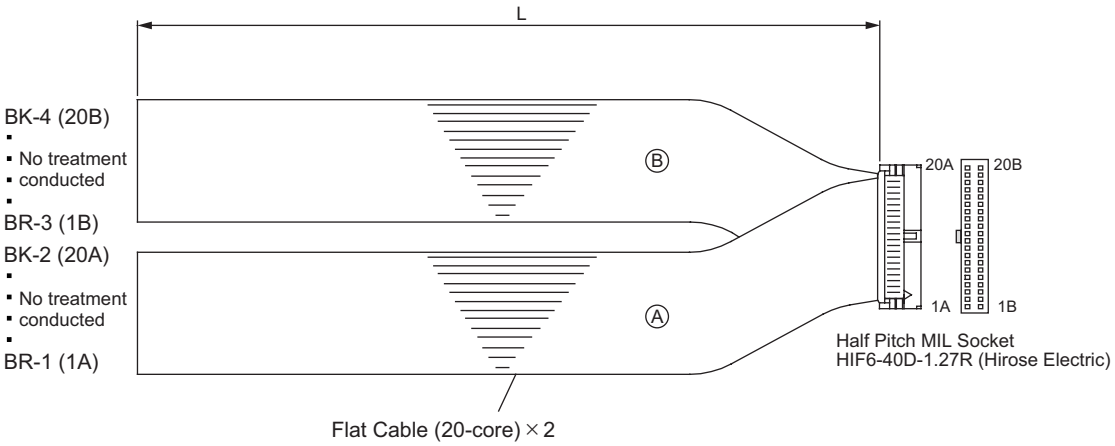

2) PIO Pattern 1 ····· Teaching mode (Teaching type)

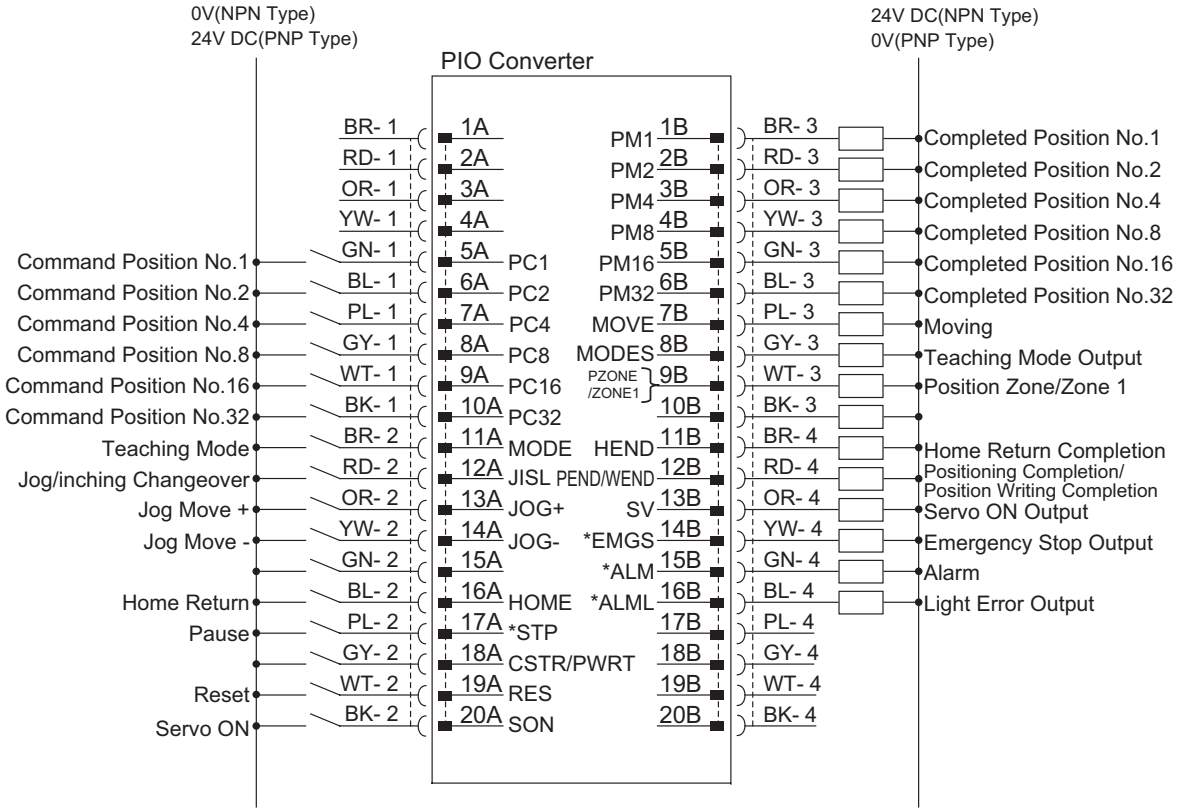

"*" in codes above shows the signal of the active low. Processing occurs when an input signal of the type is turned OFF. An output signal of the type is normally ON in the power-on status and turned OFF at signal output.

- Use the attached cable for the I/O connection.
  Model : CB-PAC-PIO□□□ (□□□ indicates the cable length L. Example. 020 = 2m)

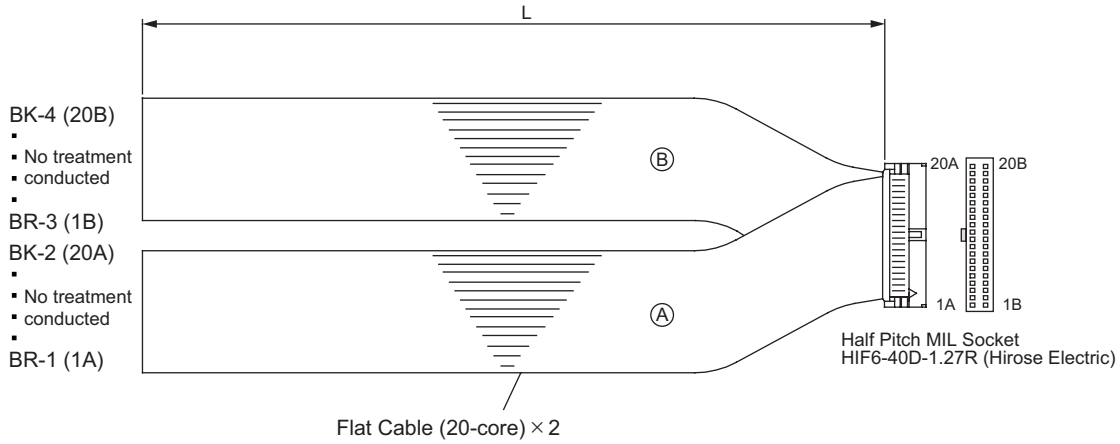

3) PIO Pattern 2 ····· 256-point mode (Number of positioning points : 256-point type)

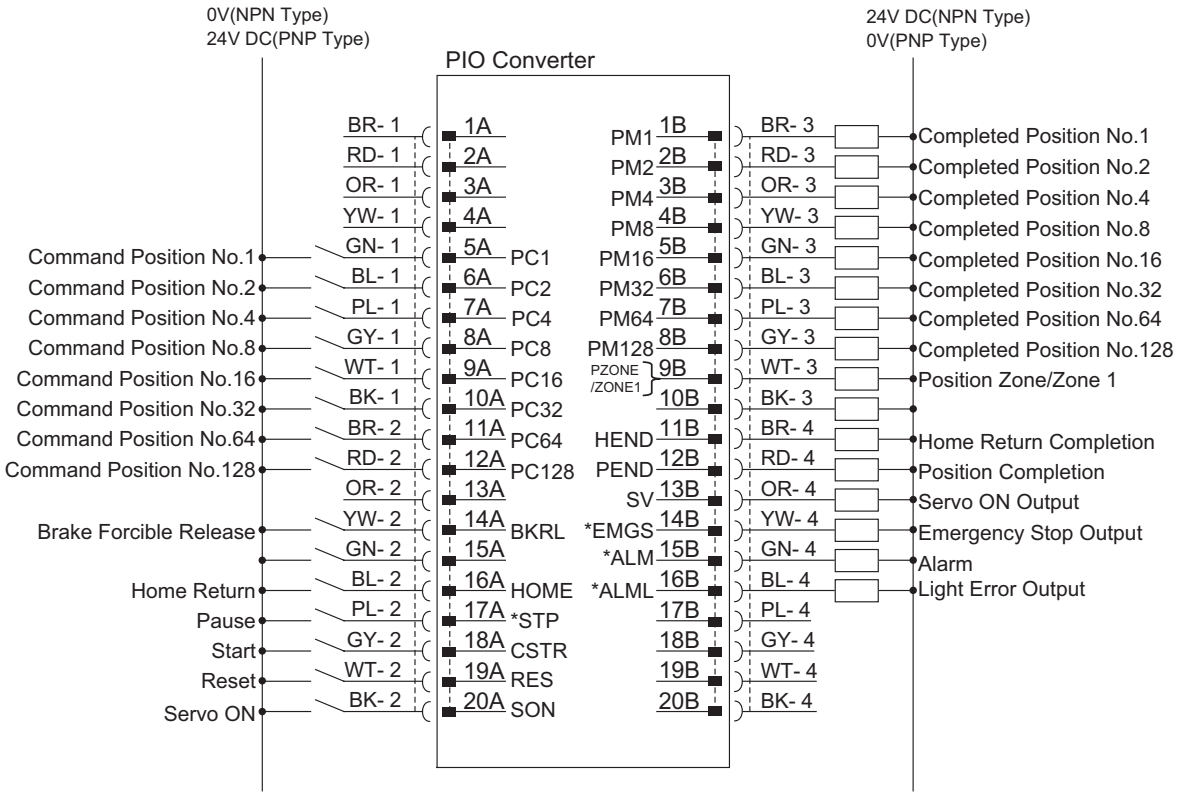

"*" in codes above shows the signal of the active low. Processing occurs when an input signal of the type is turned OFF. An output signal of the type is normally ON in the power-on status and turned OFF at signal output.

- Use the attached cable for the I/O connection.
  Model : CB-PAC-PIO□□□ (□□□ indicates the cable length L. Example. 020 = 2m)

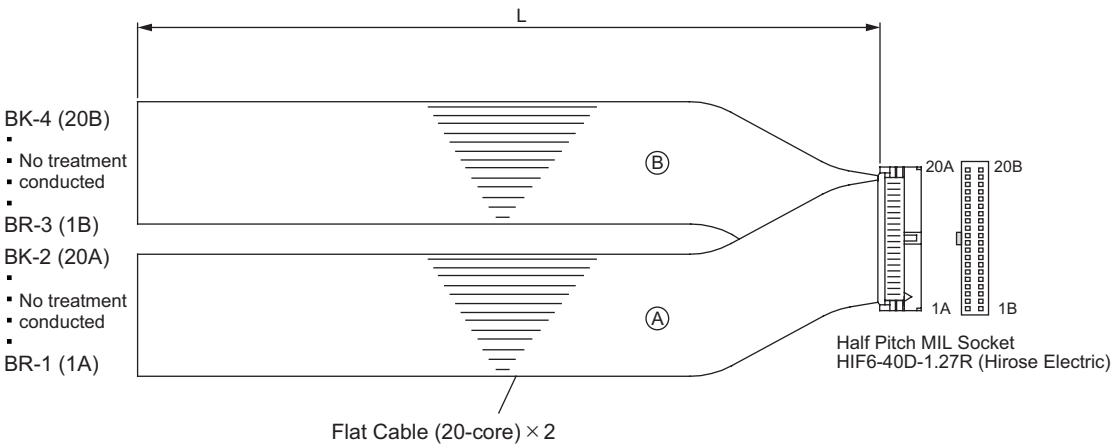

4) PIO Pattern 3 ····· 512-point mode (Number of positioning points : 512-point type)

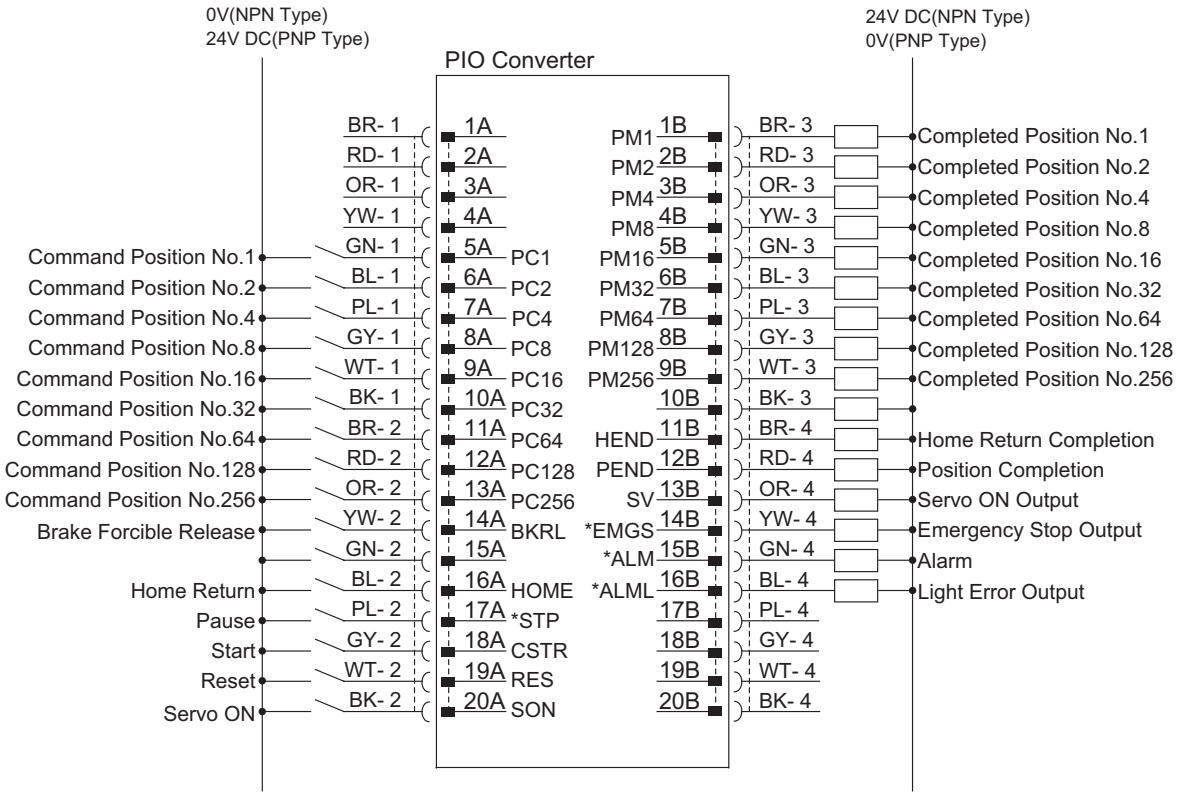

"*" in codes above shows the signal of the active low. Processing occurs when an input signal of the type is turned OFF. An output signal of the type is normally ON in the power-on status and turned OFF at signal output.

- Use the attached cable for the I/O connection.
  Model : CB-PAC-PIO□□□ (□□□ indicates the cable length L. Example. 020 = 2m)

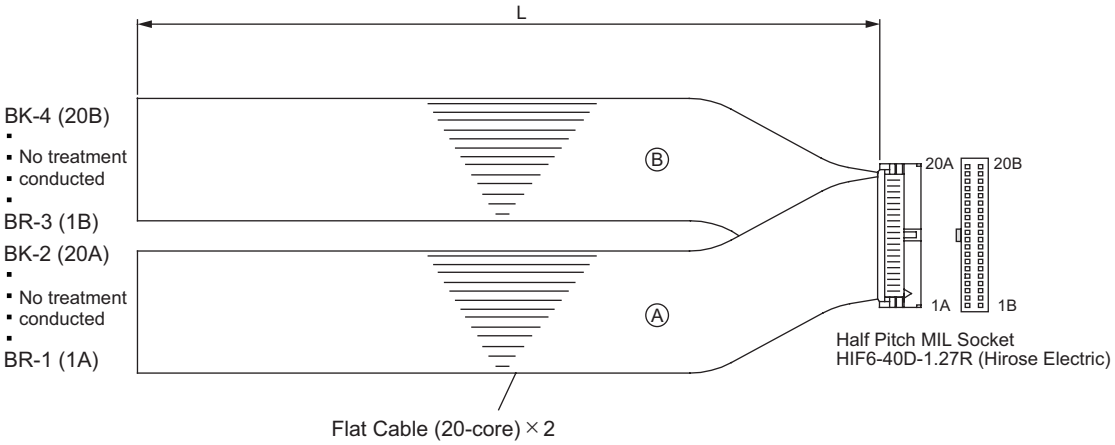

5) PIO Pattern 4 ·····Solenoid Valve Mode 1 (7-point type)

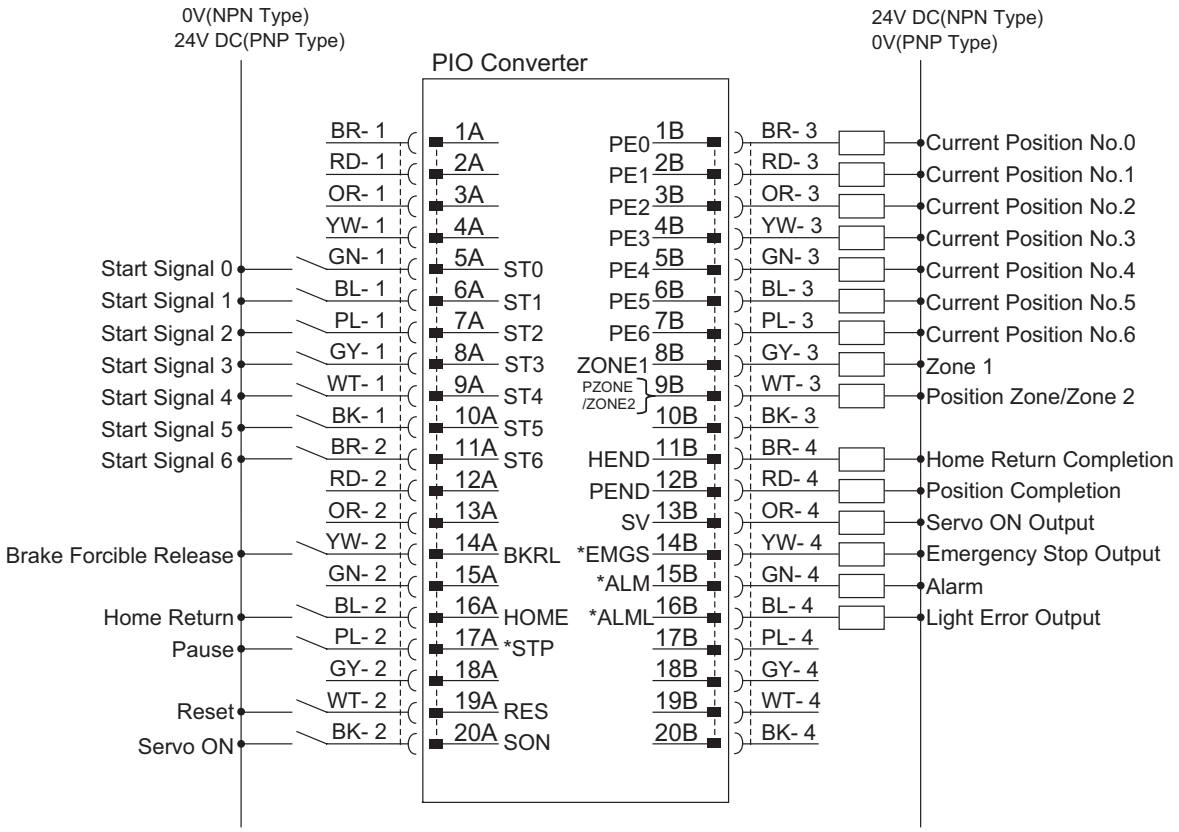

"*" in codes above shows the signal of the active low. Processing occurs when an input signal of the type is turned OFF. An output signal of the type is normally ON in the power-on status and turned OFF at signal output.

- Use the attached cable for the I/O connection.
  Model : CB-PAC-PIO□□□ (□□□ indicates the cable length L. Example. 020 = 2m)

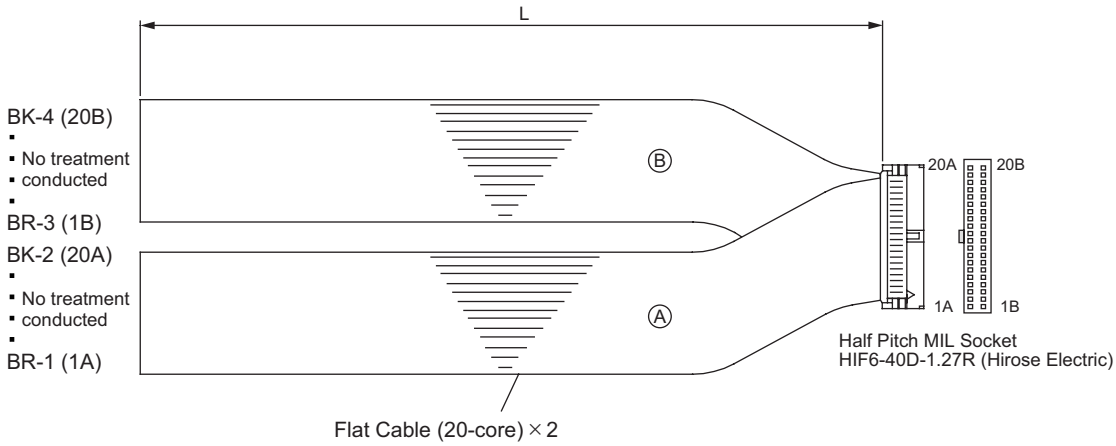

6) PIO Pattern 5 ·····Solenoid Valve Mode 2 (3-point type)

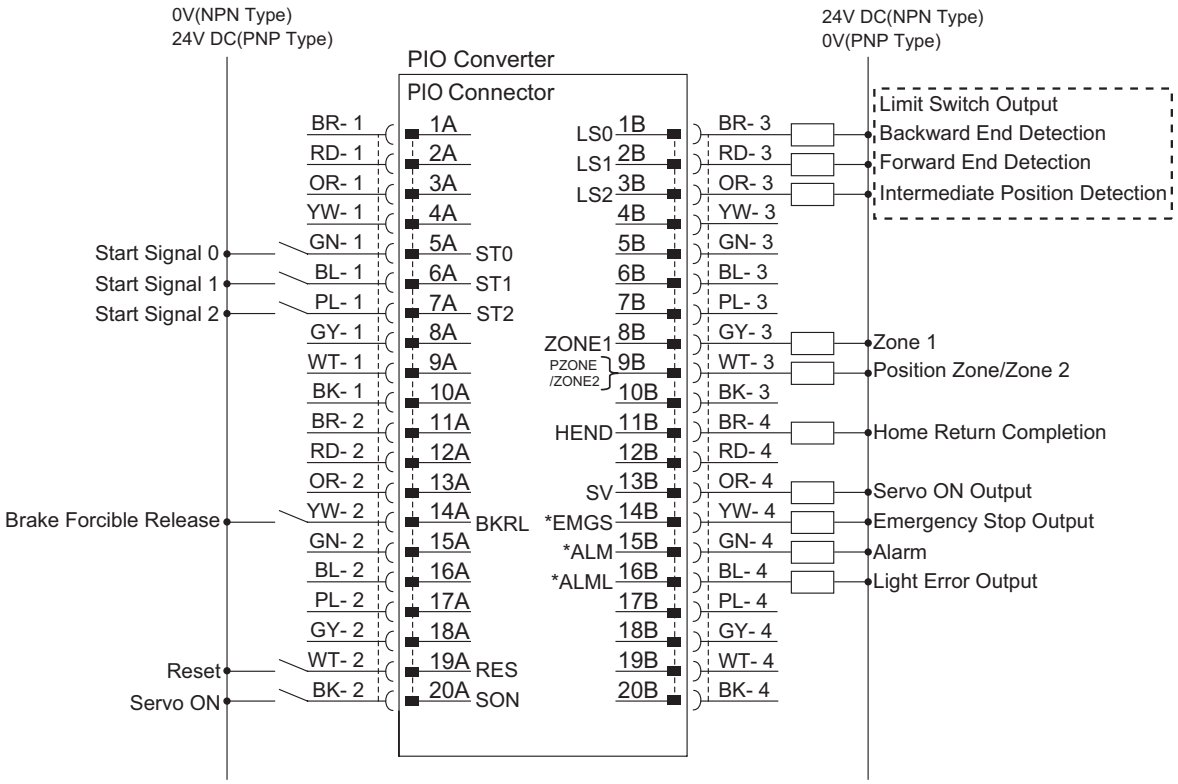

"*" in codes above shows the signal of the active low. Processing occurs when an input signal of the type is turned OFF. An output signal of the type is normally ON in the power-on status and turned OFF at signal output.

- Use the attached cable for the I/O connection.
  Model : CB-PAC-PIO□□□ (□□□ indicates the cable length L. Example. 020 = 2m)

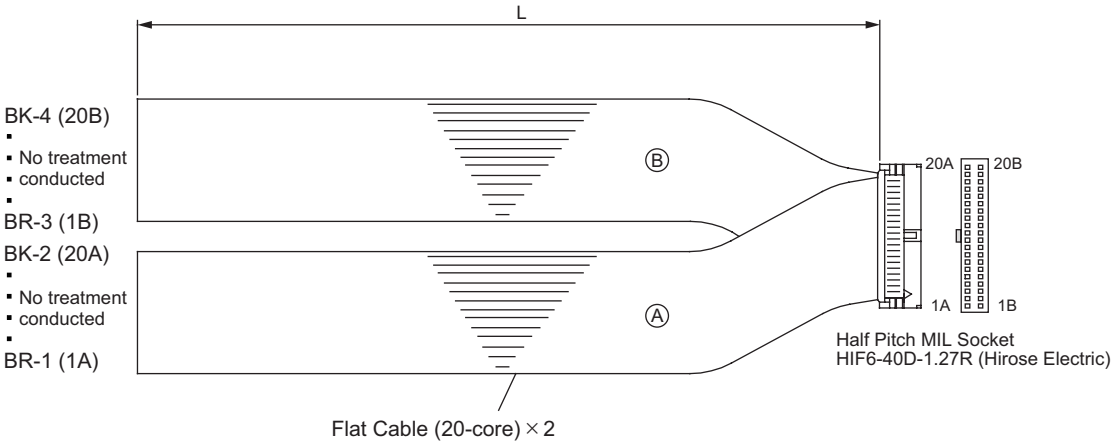

3.4 MEC Mode 1 (Operation with PLC)

3.4.1 Wiring Diagram (Connection of construction devices)

I/O type of the model code is NP or PN.
It is available to have a try run and teaching with Quick Teach.

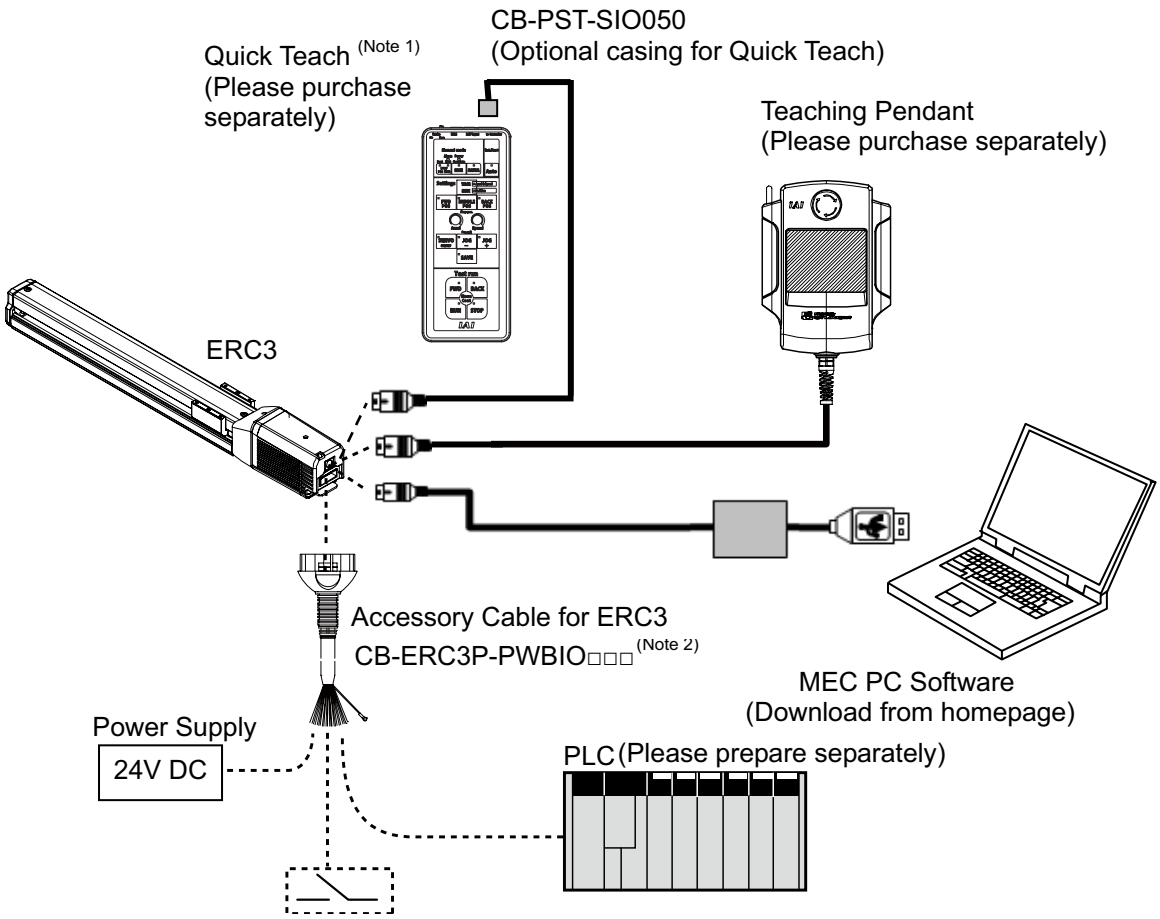

Brake release switch
It is a switch to release the brake compulsorily for the actuator equipped with a brake.
It is convenient when in maintenance or adjustment work if it is installed.
When using Quick Teach, the brake compulsory release switch equipped in Quick Teach is available.

Note 1 It is not necessary to connect a power source to Quick Teach. If Quick Teach is equipped with a power supply unit (100V type / 200V type / EU destination type), remove the power supply unit.
The emergency stop input terminal is treated with short-circuit by a jumper. Remove the jumper if necessary and connect devices such as an emergency stop switch (always closed and open in emergency stop).

Note 2 □□□ indicates the cable length. (Example) 030 = 3m

3.4.2 PIO Pattern Selection and PIO Signal

[1] Operation pattern

There are 2 types of operation patterns available. The selection of the operation patterns is to be set in the initial setting process using a teaching tool such as the PC software. See the instruction manual of each teaching tool for more details.
This setting cannot be made for Quick Teach.
Explained below is the outline of the operational specifications for each pattern.

Operation pattern		Description	How to connect motorized cylinder	Air cylinder circuit (Reference)
Stopping at 2 points (2-point positioning)	Movement by 1 input between 2 points [Single-solenoid mode]	You can move the actuator between 2 points using the same control you would normally use with an air cylinder. You can set the positions of the end point and start point. You can specify the moving speed and acceleration/deceleration. You can also specify push-motion Operation. The actuator moves to the end point when the ST0 turns ON, and returns to the start point when the signal turns OFF.	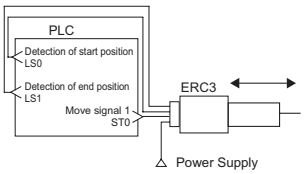	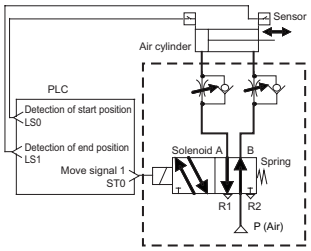
Stopping at 3 points (3-point positioning)	Movement by 2 input between 2 points [Double-solenoid mode]	You can move the actuator between 2 points using the same control you would normally use with an air cylinder. You can set the positions of the end point and start point. You can set the position of an intermediate point and perform positioning to the intermediate point. You can specify the moving speed and acceleration/deceleration. You can also specify push-motion Operation. The actuator moves to the end point when the ST1 turns ON, and moves to the start point when the ST0 turns ON. [Intermediate movement mode, both ON] When both the ST0 and ST1 are turned ON, the actuator will position to and stop at an intermediate point. When both the ST0 and ST1 are turned OFF, the actuator will stop in the middle of movement. [Intermediate movement mode, both OFF] When both the ST0 and ST1 are turned OFF, the actuator will position to and stop at an intermediate point. When both the ST0 and ST1 are turned ON, the actuator will stop in the middle of movement.	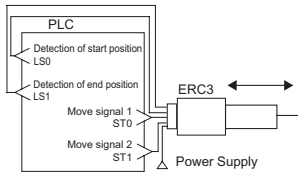	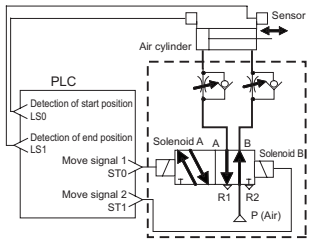 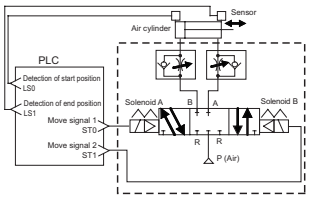
	Movement by 2 input between 3 points [3-point positioning]		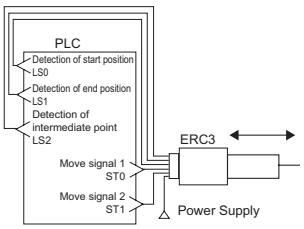	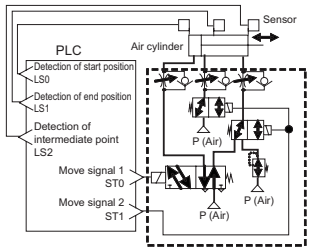

[2] Operation Patterns and Signal Assignments

The signal assignment of cable by the operation pattern is as shown below. Follow the table below to connect external equipment (such as a PLC).

Pin No.	Wire Color	Category		Operation pattern		
				Stopping at 2 points (2-point positioning)	Stopping at 3 points (3-point positioning)	
				Movement by 1 input between 2 points [Single-solenoid mode]	Movement by 2 input between 2 points [Double-solenoid mode]	Movement by 2 input between 3 points [3-point positioning]
A1	Drain	Frame ground		FG		
B1	BR	Control power unit +24V		CP		
A2	–	–		–		
B2	RD	Control power unit 0V		CP_GND		
A3	RD 1	Brake forcible release		BK		
B3	OR	Motor power unit +24V		MP		
A4	OR 1	Emergency-stop input		EMG		
B4	YW	Motor power unit 0V		MP_GND		
A5	–	–		–		
B5	GN	–		–		
A6	–	–		–		
B6	BR 1	–		–		
A7	BL	–		–		
B7	PL	–		–		
A8	GY	–		–		
B8	WT	–		–		
A9	BR 2	Input	IN0	ST0	ST0	
B9	RD 2		IN1	–	ST1	
A10	OR 2		IN2	RES	RES	
B10	YW 2		IN3	–	–	
A11	GN 2		IN4	–	–	
B11	BL 2		IN5	–	–	
A12	PL 2	Output	OUT0	LS0/PE0	LS0/PE0	
B12	GY 2		OUT1	LS1/PE1	LS1/PE1	
A13	WT 2		OUT2	HEND	LS2/PE2	
B13	BK		OUT3	*ALM	*ALM	

Signal with “*” expresses the signal of active low.

(Reference) Signal of Active Low

Signal with “*” expresses the signal of active low. A signal of active low is a signal that the input signal is processed when it is turned OFF, output signal is ordinary ON while the power is ON, and turns OFF when the signal is output.

[3] List of PIO Signals

The table below lists the functions of PIO signals. Refer to Section 4.4 [6] and [7] for the details of the control for each signal.

Signal Type	Signal Name			Contents of Signals	Function		
					Stopping at 2 points (2-point positioning)	Stopping at 3 points (3-point positioning)	
					Movement by 1 input between 2 points [Single-solenoid mode]	Movement by 2 input between 2 points [Double-solenoid mode]	Movement by 2 input between 3 points [3-point positioning]
Input	ST0			Move Signal 1	Positioning starts towards the end point when the ON level is detected. Positioning starts towards the start point when the OFF level is detected.	Positioning starts towards the corresponding point when the ON level is detected. Moving to end point with ST0 = OFF and ST1 = ON Moving to start point with ST0 = ON and ST1 = OFF ⚠Caution Set to [Both ON for intermediate movement method] in the initial settings. Have the interlock activated so ST0 and ST1 cannot be turned ON at the same time. A positioning at the intermediate point is performed if both are turned ON.	Positioning starts towards the corresponding point when the ON level is detected. Moving to end point with ST0 = OFF and ST1 = ON Moving to start point with ST0 = ON and ST1 = OFF [Intermediate Point Movement = Both ON] Moving to intermediate point with ST0 = ON and ST1 = ON Stop during operation with ST0 = OFF and ST1 = OFF [Intermediate Point Movement = Both OFF] Moving to intermediate point with ST0 = OFF and ST1 = OFF Stop during operation with ST0 = ON and ST1 = ON
	ST1			Move Signal 2			
	RES			Reset	An alarm will be reset when this signal is turned ON.		
Output	Pressing Function	Not used	LS0	Start Point Detection	The same operation as of the sensor of the air cylinder is performed. It is turned ON when the current position is within the positioning width for each position detection output.		
			LS1	End Point Detection			
			LS2	Intermediate Point Detection			
		Use	PE0	Start Point Positioning Complete	It turns ON when the pressing or the positioning is complete. (It also turns ON even with a miss-operation.) It turns OFF with a movement signal to another point.		
			PE1	End Point Positioning Complete			
			PE2	Intermediate Point Positioning Complete			
	HEND			Home Return Completion	This signal is turned ON when the home return operation is completed. This signal will not exist when 3-point stop (3-point positioning) is selected as the operation pattern.		
	*ALM			Alarm Output Signal	This signal is turned ON when the controller is in the normal condition and turned OFF when the controller is in the alarm condition.		

3.4.3 Circuit Diagram

Sample circuit diagrams are shown below.

[1] Power Line and Emergency Stop Circuit

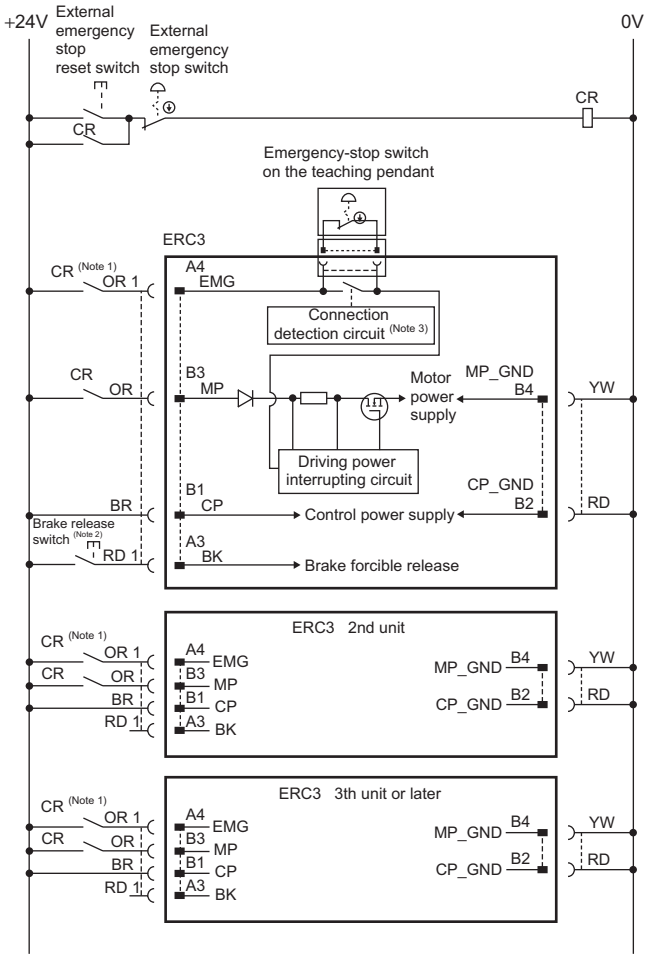

Note 1 The load current for the emergency stop signal to turn ON/OFF at contact CR is 24V DC and 10mA.

Note 2 This is a switch to compulsorily release the brake of the actuator equipped with a brake. It is convenient when in maintenance or adjustment work if it is installed. It is necessary to have at least 24V DC and 150mA for the switch contact capacity.

Note 3 The controller automatically identifies that the teaching tool is connected and activates the emergency stop switch of the teaching pendant.

⚠ Caution:

- Do not attempt to shut the 0V circuit of MP_GND and CP_GND with the emergency stop. Doing so may burn the internal circuit. If an absolute shutoff of the power supply is required, conduct it on the primary side of DC power supply (alternating current side).
- The emergency stop switch of the teaching pendant cannot be reflected to the emergency stop circuit of the whole system.
- In case the power source for each controller is different, join the 0V of each power supply together.

[2] PIO Circuit

1) Stopping at 2 points (2-point positioning)

·····Movement by 1 input between 2 points (Single-solenoid mode)

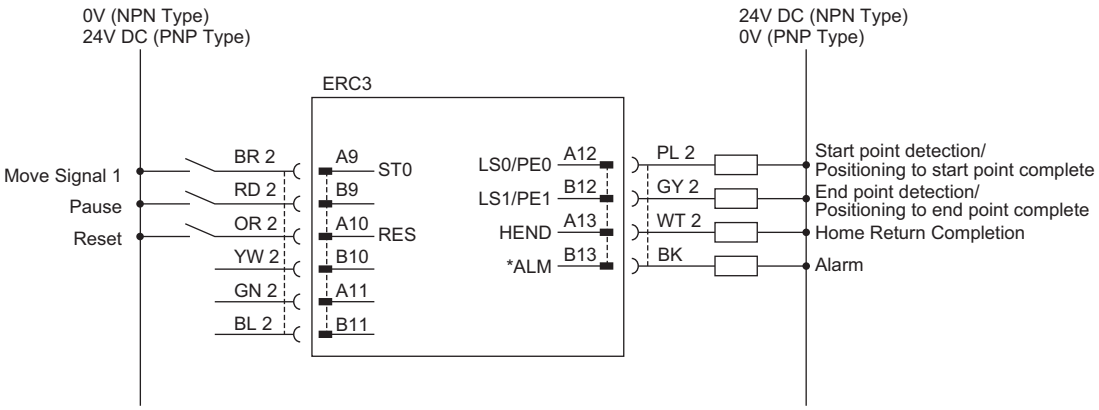

"*" in codes above shows the signal of the active low. Processing occurs when an input signal of the type is turned OFF. An output signal of the type is normally ON in the power-on status and turned OFF at signal output.

- For the connection of I/O, use the enclosed cable for those connections including the power supply and emergency stop circuit.
  Model : CB-ERC3P-PWBIO□□□ (□□□ indicates the cable length L. Example. 020 = 2m)

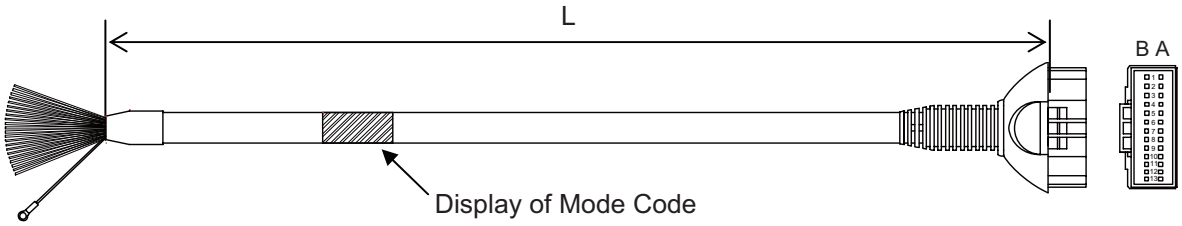

Pin No.	Wire Color	Signal Abbreviation	Width	Pin No.	Wire Color	Signal Abbreviation	Width
A1	Drain	FG	AWG22 (0.3mm^2)	B1	BR	CP	AWG22 (0.3mm^2)
A2	–	–	–	B2	RD	CP_GND	
A3	RD 1	BK	AWG28 (0.08mm^2)	B3	OR	MP	AWG19 (0.75mm^2)
A4	OR 1	EMG		B4	YW	MP_GND	
A5	–	–	–	B5	GN	–	AWG28 (0.08mm^2)
A6	–	–	–	B6	BR 1	–	
A7	BL	–	AWG28 (0.08mm^2)	B7	PL	–	
A8	GY	–		B8	WT	–	
A9	BR 2	ST01		B9	RD 2	–	
A10	OR 2	RES		B10	YW 2	–	
A11	GN 2	–		B11	BL 2	–	
A12	PL 2	LS0/PE0		B12	GY 2	LS1/PE1	
A13	WT 2	HEND		B13	BK	*ALM	

(Note) Wire color No.1 is colored with short-dotted line and No.2 with long-dotted line.

2) Stopping at 3 points (3-point positioning)
..... { Movement by 2 input between 2 points (Double-solenoid mode)
Movement by 2 input between 3 points (3-point positioning)

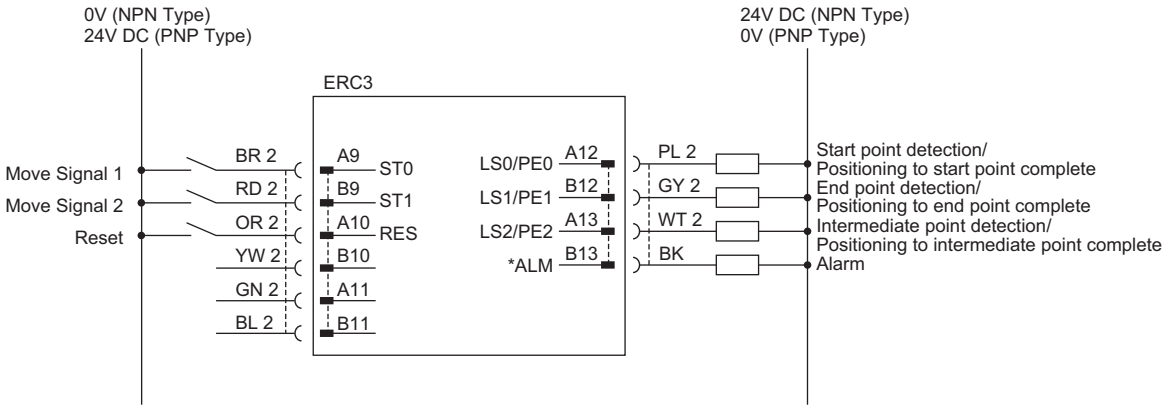

"*" in codes above shows the signal of the active low. Processing occurs when an input signal of the type is turned OFF. An output signal of the type is normally ON in the power-on status and turned OFF at signal output.

- Use the attached cable for the I/O connection.
  Model : CB-ERC3P-PWBIO□□□ (□□□ indicates the cable length L. Example. 020 = 2m)

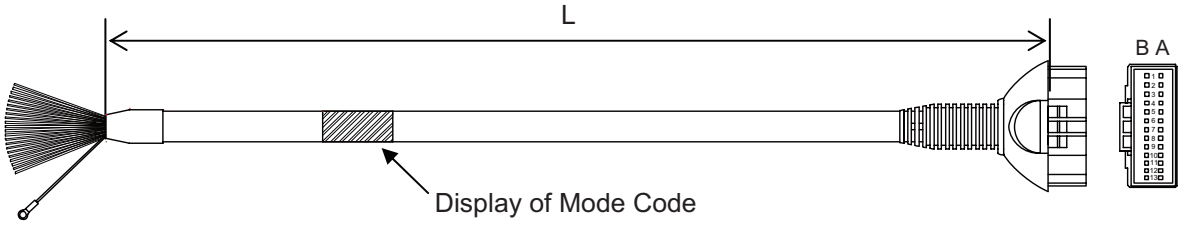

Pin No.	Wire Color	Signal Abbreviation	Width	Pin No.	Wire Color	Signal Abbreviation	Width
A1	Drain	FG	AWG22 (0.3mm^2)	B1	BR	CP	AWG22 (0.3mm^2)
A2	–	–	–	B2	RD	CP_GND	
A3	RD 1	BK	AWG28 (0.08mm^2)	B3	OR	MP	AWG19 (0.75mm^2)
A4	OR 1	EMG		B4	YW	MP_GND	
A5	–	–	–	B5	GN	–	AWG28 (0.08mm^2)
A6	–	–	–	B6	BR 1	–	
A7	BL	–	AWG28 (0.08mm^2)	B7	PL	–	
A8	GY	–		B8	WT	–	
A9	BR 2	ST0		B9	RD 2	ST1	
A10	OR 2	RES		B10	YW 2	–	
A11	GN 2	–		B11	BL 2	–	
A12	PL 2	LS0/PE0		B12	GY 2	LS1/PE1	
A13	WT 2	LS2/PE2		B13	BK	*ALM	

(Note) Wire color No.1 is colored with short-dotted line and No.2 with long-dotted line.

3.5 MEC Mode 2 (Operation Using PIO Converter)

3.5.1 Wiring Diagram (Connection of construction devices)

The model code for I/O type of ERC3 is SIO type (model code: SE).

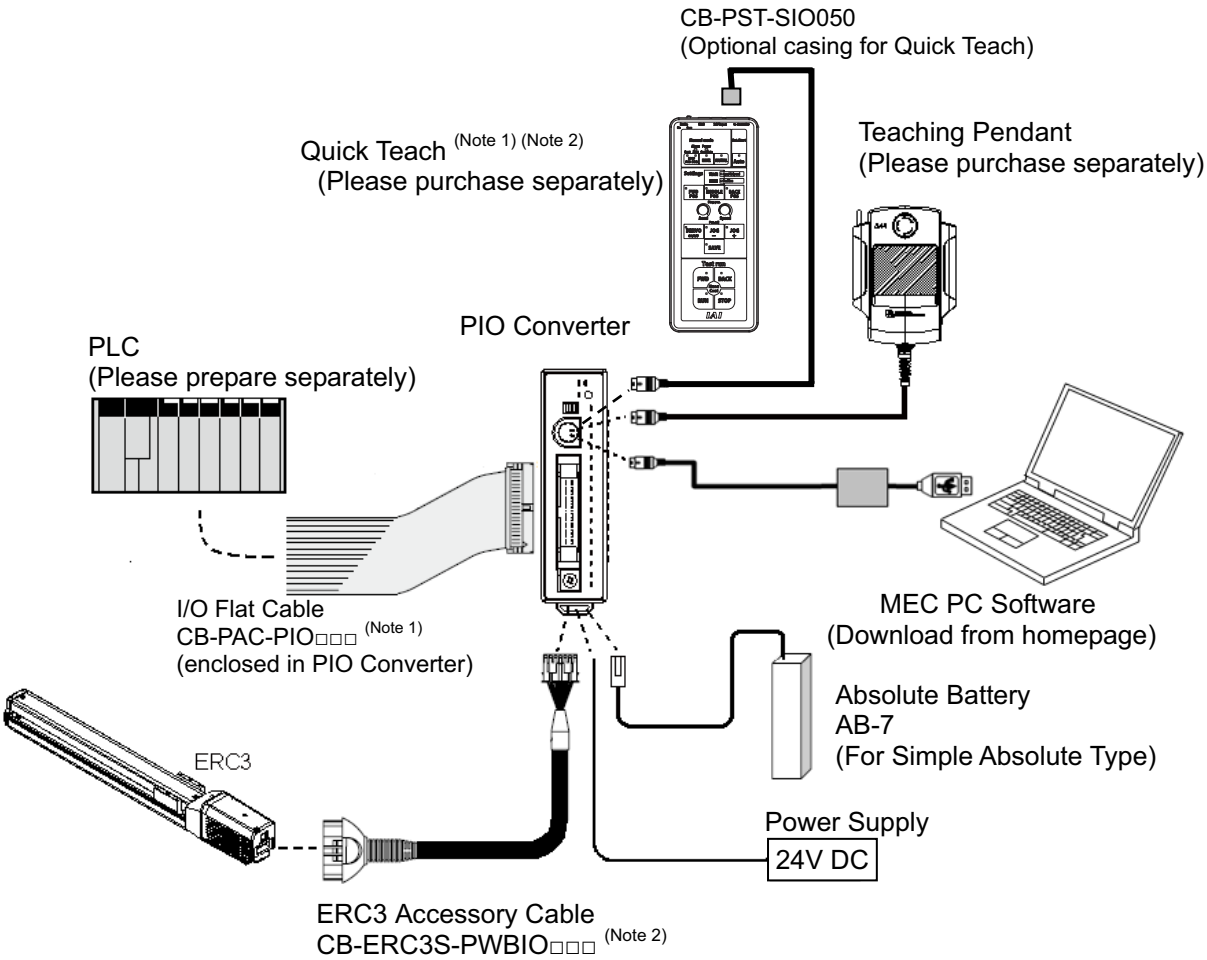

Note 1 If Quick Teach is equipped with a power supply unit (100V type / 200V type / EU destination type), remove the power supply unit.
The emergency stop input terminal is treated with short-circuit by a jumper. Remove the jumper if necessary and connect devices such as an emergency stop switch (always closed and open in emergency stop).

Note 2 □□□ indicates the cable length. (Example) 030 = 3m

3.5.2 PIO Pattern Selection and PIO Signal

[1] Operation pattern

There are 2 types of operation patterns available. The selection of the operation patterns is to be set in the initial setting process using a teaching tool such as the PC software. See the instruction manual of each teaching tool for more details.
This setting cannot be made for Quick Teach.
Explained below is the outline of the operational specifications for each pattern.

Operation pattern		Description	How to connect motorized cylinder	Air cylinder circuit (Reference)
Stopping at 2 points (2-point positioning)	Movement by 1 input between 2 points [Single-solenoid mode]	You can move the actuator between 2 points using the same control you would normally use with an air cylinder. You can set the positions of the end point and start point. You can specify the moving speed and acceleration/deceleration. You can also specify push-motion Operation. The actuator moves to the end point when the ST0 turns ON, and returns to the start point when the signal turns OFF.	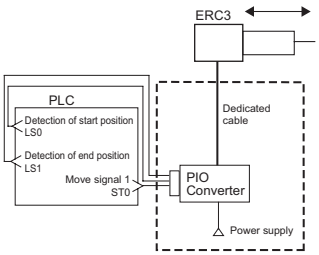	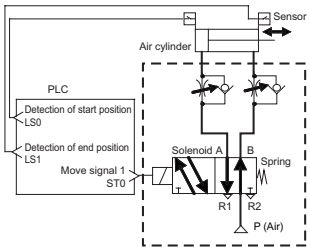
Stopping at 3 points (3-point positioning)	Movement by 2 input between 2 points [Double-solenoid mode]	You can move the actuator between 2 points using the same control you would normally use with an air cylinder. You can set the positions of the end point and start point. You can set the position of an intermediate point and perform positioning to the intermediate point. You can specify the moving speed and acceleration/deceleration. You can also specify push-motion Operation. The actuator moves to the end point when the ST1 turns ON, and moves to the start point when the ST0 turns ON. [Intermediate movement mode, both ON] When both the ST0 and ST1 are turned ON, the actuator will position to and stop at an intermediate point. When both the ST0 and ST1 are turned OFF, the actuator will stop in the middle of movement. [Intermediate movement mode, both OFF] When both the ST0 and ST1 are turned OFF, the actuator will position to and stop at an intermediate point. When both the ST0 and ST1 are turned ON, the actuator will stop in the middle of movement.	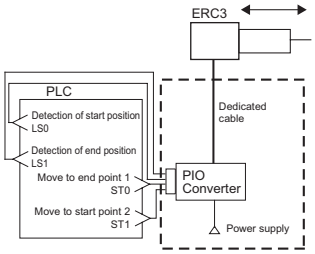	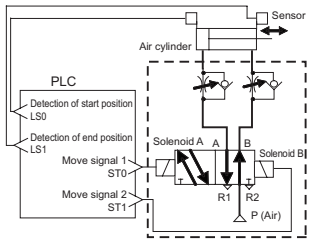 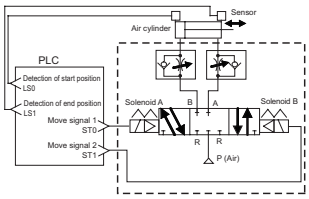
	Movement by 2 input between 3 points [3-point positioning]		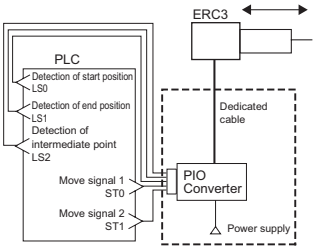	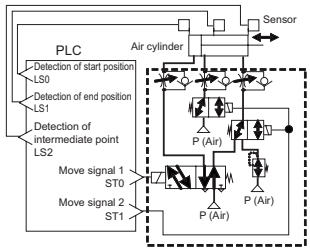

[2] Operation Patterns and Signal Assignments

The signal assignment of cable by the operation pattern is as shown below. Follow the following table to connect the external equipment (such as PLC).

Pin No.	Wire Color	Category		Operation pattern		
				Stopping at 2 points (2-point positioning)	Stopping at 3 points (3-point positioning)	
				Movement by 1 input between 2 points [Single-solenoid mode]	Movement by 2 input between 2 points [Double-solenoid mode]	Movement by 2 input between 3 points [3-point positioning]
1A	BR-1	–		–		
2A	RD-1	–		–		
3A	OR-1	–		–		
4A	YW-1	–		–		
5A	GN-1	Input	IN0	ST0	ST0	
6A	BL-1		IN1	–	ST1	
7A	PL-1		IN2	RES	RES	
8A	GY-1		IN3	–	–	
9A	WT-1		IN4	–	–	
10A	BK-1		IN5	–	–	
11A	BR-2		IN6	–	–	
12A	RD-2		IN7	–	–	
13A	OR-2		IN8	–	–	
14A	YW-2		IN9	–	–	
15A	GN-2		IN10	–	–	
16A	BL-2		IN11	–	–	
17A	PL-2		IN12	–	–	
18A	GY-2		IN13	–	–	
19A	WT-2		IN14	–	–	
20A	BK-2		IN15	–	–	
1B	BR-3	Output	OUT0	LS0/PE0	LS0/PE0	
2B	RD-3		OUT1	LS1/PE1	LS1/PE1	
3B	OR-3		OUT2	HEND	LS2/PE2	
4B	YW-3		OUT3	*ALM	*ALM	
5B	GN-3		OUT4		–	
6B	BL-3		OUT5		–	
7B	PL-3		OUT6		–	
8B	GY-3		OUT7		–	
9B	WT-3		OUT8		–	
10B	BK-3		OUT9		–	
11B	BR-4		OUT10		–	
12B	RD-4		OUT11		–	
13B	OR-4		OUT12		–	
14B	YW-4		OUT13		–	
15B	GN-4		OUT14		–	
16B	BL-4		OUT15		–	
17B	PL-4	–				
18B	GY-4	–				
19B	WT-4	–				
20B	BK-4	–				

Signal with “*” expresses the signal of active low.

(Reference) Signal of Active Low

Signal with “*” expresses the signal of active low. A signal of active low is a signal that the input signal is processed when it is turned OFF, output signal is ordinary ON while the power is ON, and turns OFF when the signal is output.

[3] List of PIO Signals

The table below lists the functions of PIO signals. Refer to Section 4.4 [6] and [7] for the details of the control for each signal.

Signal Type	Signal Name			Contents of Signals	Function		
					Stopping at 2 points (2-point positioning)	Stopping at 3 points (3-point positioning)	
					Movement by 1 input between 2 points [Single-solenoid mode]	Movement by 2 input between 2 points [Double-solenoid mode]	Movement by 2 input between 3 points [3-point positioning]
Input	ST0			Move Signal 1	Positioning starts towards the end point when the ON level is detected. Positioning starts towards the start point when the OFF level is detected.	Positioning starts towards the corresponding point when the ON level is detected. Moving to end point with ST0 = OFF and ST1 = ON Moving to start point with ST0 = ON and ST1 = OFF ⚠Caution Set to [Both ON for intermediate movement method] in the initial settings. Have the interlock activated so ST0 and ST1 cannot be turned ON at the same time. A positioning at the intermediate point is performed if both are turned ON.	Positioning starts towards the corresponding point when the ON level is detected. Moving to end point with ST0 = OFF and ST1 = ON Moving to start point with ST0 = ON and ST1 = OFF [Intermediate Point Movement = Both ON] Moving to intermediate point with ST0 = ON and ST1 = ON Stop during operation with ST0 = OFF and ST1 = OFF [Intermediate Point Movement = Both OFF] Moving to intermediate point with ST0 = OFF and ST1 = OFF Stop during operation with ST0 = ON and ST1 = ON
	ST1			Move Signal 2			
	RES			Reset	An alarm will be reset when this signal is turned ON.		
Output	Pressing Function	Not used	LS0	Start Point Detection	The same operation as of the sensor of the air cylinder is performed. It is turned ON when the current position is within the positioning width for each position detection output.		
			LS1	End Point Detection			
			LS2	Intermediate Point Detection			
		Use	PE0	Start Point Positioning Complete	It turns ON when the pressing or the positioning is complete. (It also turns ON even with a miss-operation.) It turns OFF with a movement signal to another point.		
			PE1	End Point Positioning Complete			
			PE2	Intermediate Point Positioning Complete			
	HEND			Home Return Completion	This signal is turned ON when the home return operation is completed. This signal will not exist when 3-point stop (3-point positioning) is selected as the operation pattern.		
	*ALM			Alarm Output Signal	This signal is turned ON when the controller is in the normal condition and turned OFF when the controller is in the alarm condition.		

3.5.3 Circuit Diagram

Sample circuit diagrams are shown below.

[1] Power Line and Emergency Stop Circuit

(1) Built-in Drive Cutoff Relay Type

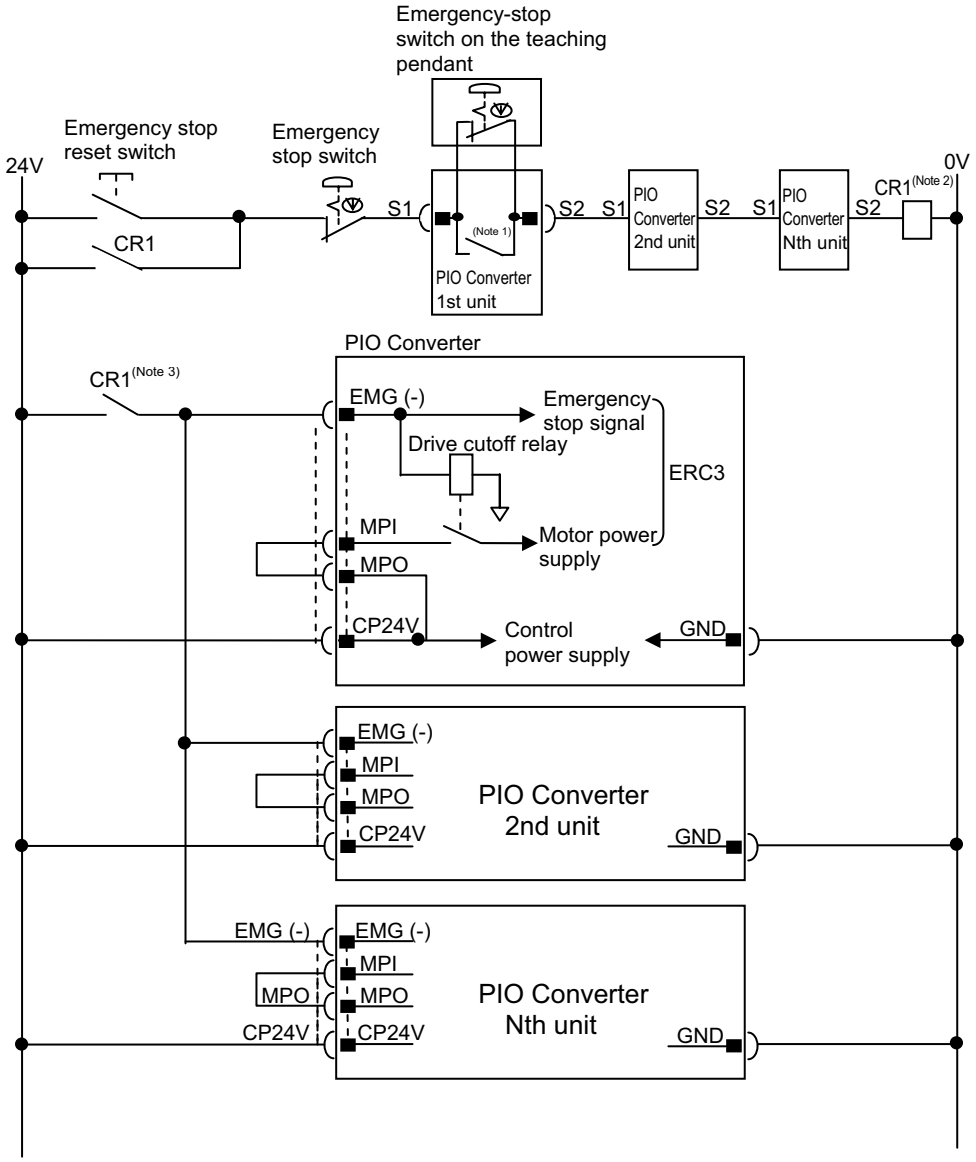

Note 1 When the teaching pendant is not connected, S1 and S2 become short-circuited inside the controller.

Note 2 For CR1, select the one with coil current 0.1A or less.

Note 3 This circuit is equivalent to Safety Category 1.
The load current for the emergency stop signal EMG (-) to turn ON/OFF at contact CR1 is 24V DC and 20mA.

⚠ Caution:

- Do not attempt to cut the 0V circuit of GND whit the emergency stop. Doing so may burn the internal circuit. If an absolute shutoff of the power supply is required, conduct it on the primary side of DC power supply (alternating current side).
- In case the power source for each controller is different, join the 0V of each power supply together.

(2) External Drive Cutoff Relay Type

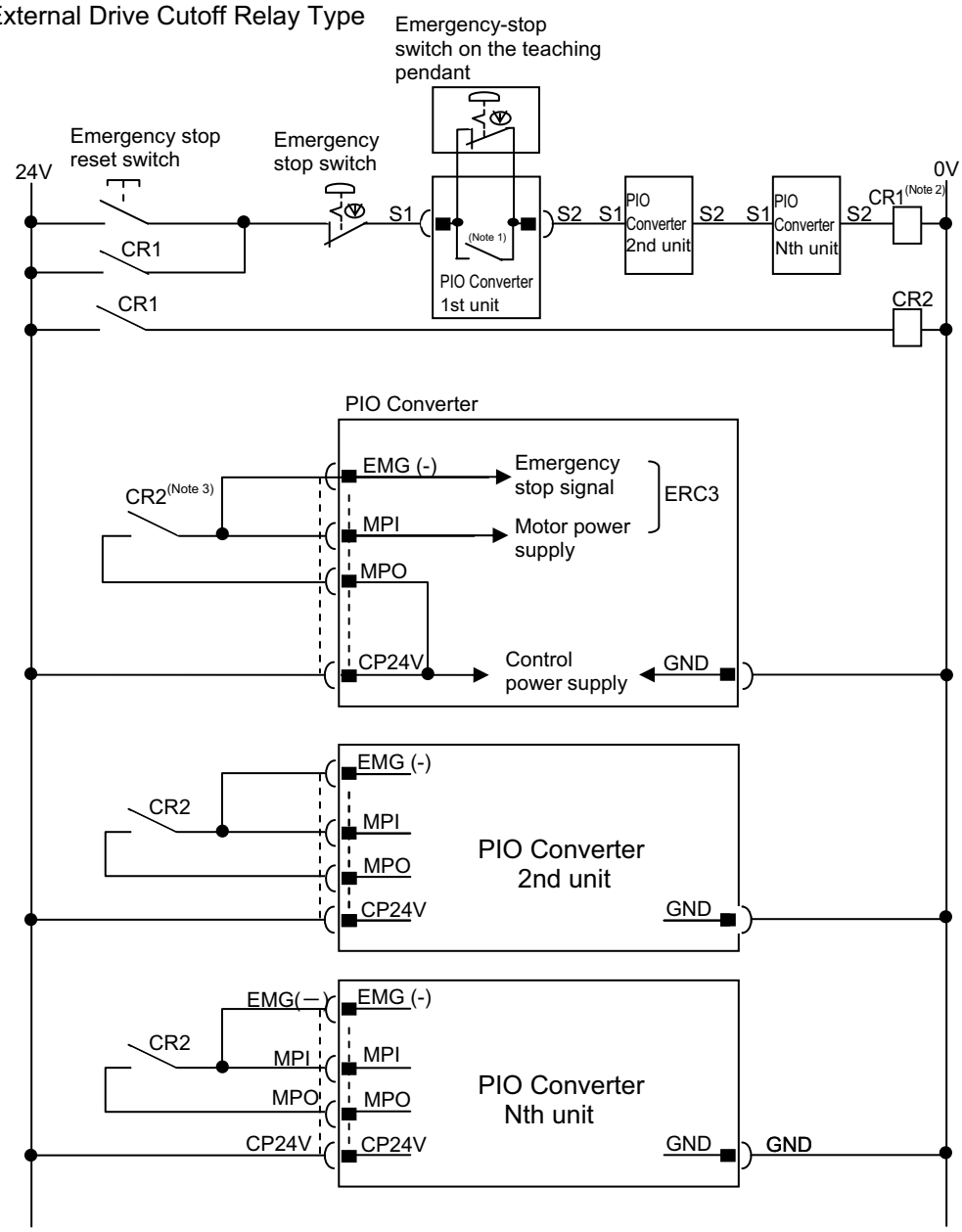

Note 1 When the teaching pendant is not connected, S1 and S2 become short-circuited inside the controller.

Note 2 For CR1, select the one with coil current 0.1A or less.

Note 3 The motor driving power line MPI that is to be turned ON/OFF at contact CR2 and the load current of the emergency stop signal EMG(-) are follows;

Load current	ERC3 high output setting valid: 3.5A (MAX. 4.2A)
	ERC high output setting invalid: 2.0A
During in-rush	8.3A

[Refer to 10.3 for the compliance with Safety Categories.]

⚠ Caution:

- Do not attempt to cut the 0V circuit of GND whit the emergency stop. Doing so may burn the internal circuit. If an absolute shutoff of the power supply is required, conduct it on the primary side of DC power supply (alternating current side).
- In case the power source for each controller is different, join the 0V of each power supply together.

[2] PIO Converter to ERC3

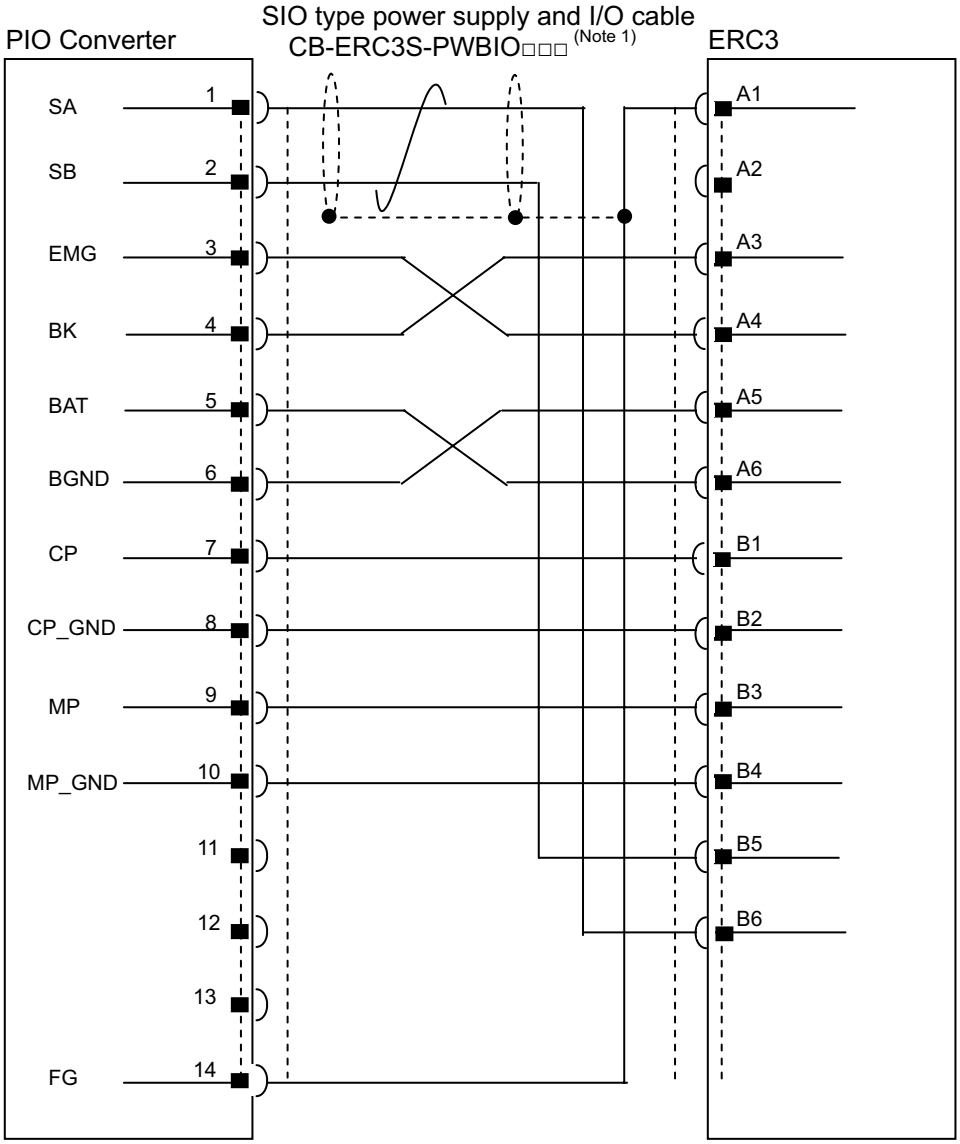

Note 1 □□□ indicates the cable length. (Example) 030 = 3m

[3] PIO Circuit

1) Stopping at 2 points (2-point positioning)
·····Movement by 1 input between 2 points (Single-solenoid mode)

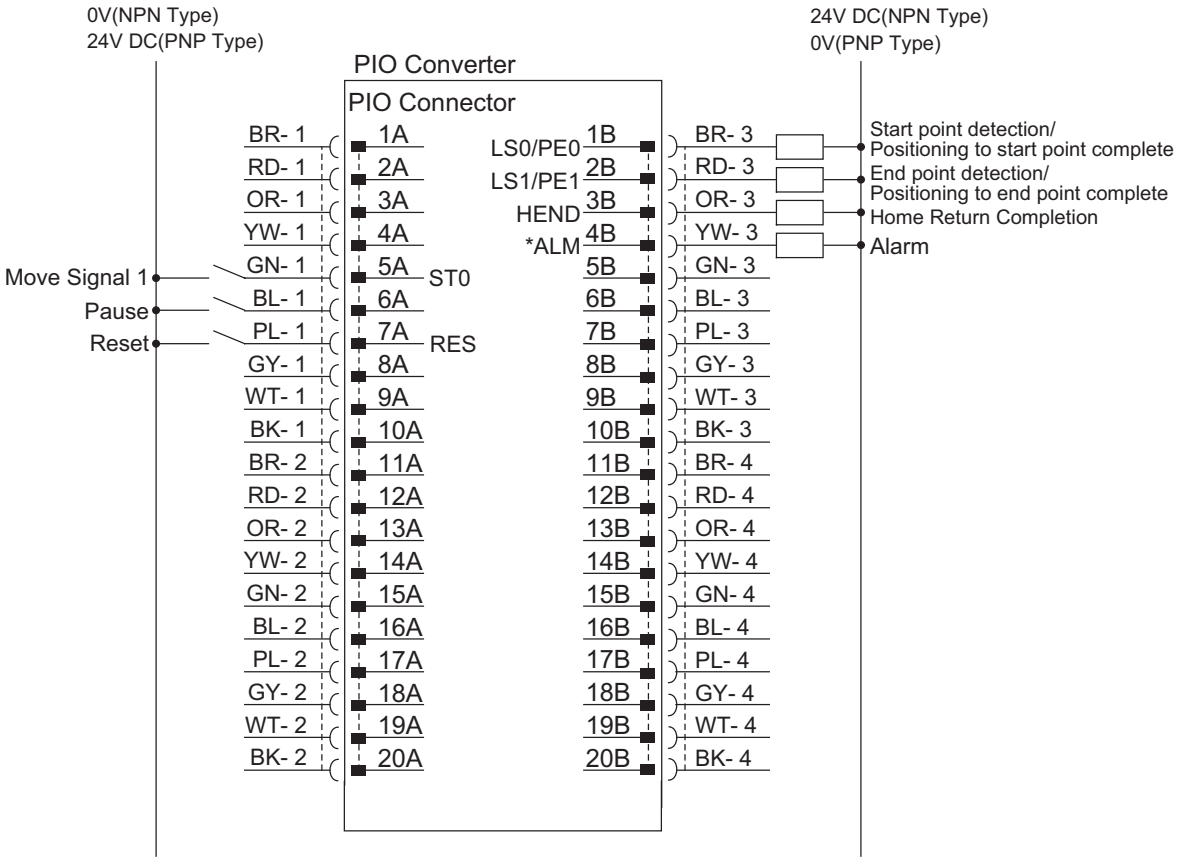

"*" in codes above shows the signal of the active low. Processing occurs when an input signal of the type is turned OFF. An output signal of the type is normally ON in the power-on status and turned OFF at signal output.

- Use the attached cable for the I/O connection.
  Model : CB-PAC-PIO□□□ (□□□ indicates the cable length L. Example. 020 = 2m)

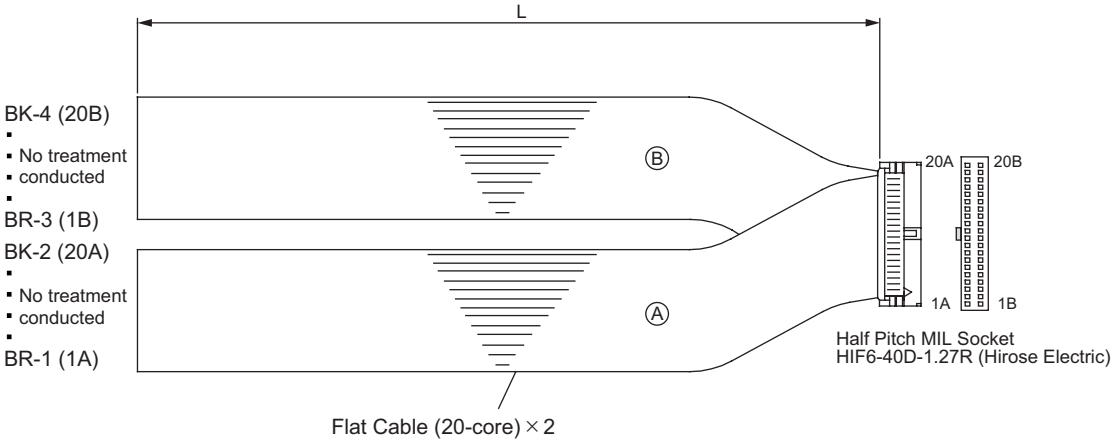

2) Stopping at 3 points (3-point positioning)
..... { Movement by 2 input between 2 points (Double-solenoid mode)
Movement by 2 input between 3 points (3-point positioning)

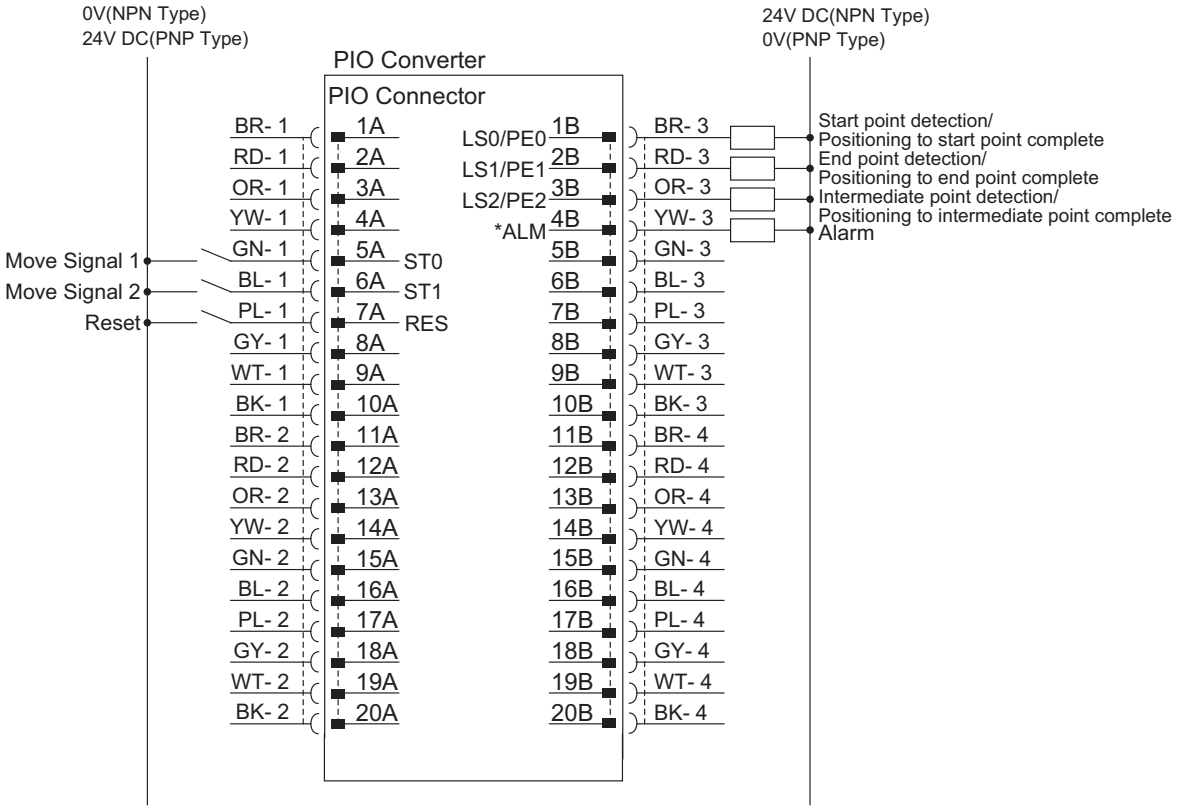

"*" in codes above shows the signal of the active low. Processing occurs when an input signal of the type is turned OFF. An output signal of the type is normally ON in the power-on status and turned OFF at signal output.

- Use the attached cable for the I/O connection.
  Model : CB-PAC-PIO□□□ (□□□ indicates the cable length L. Example. 020 = 2m)

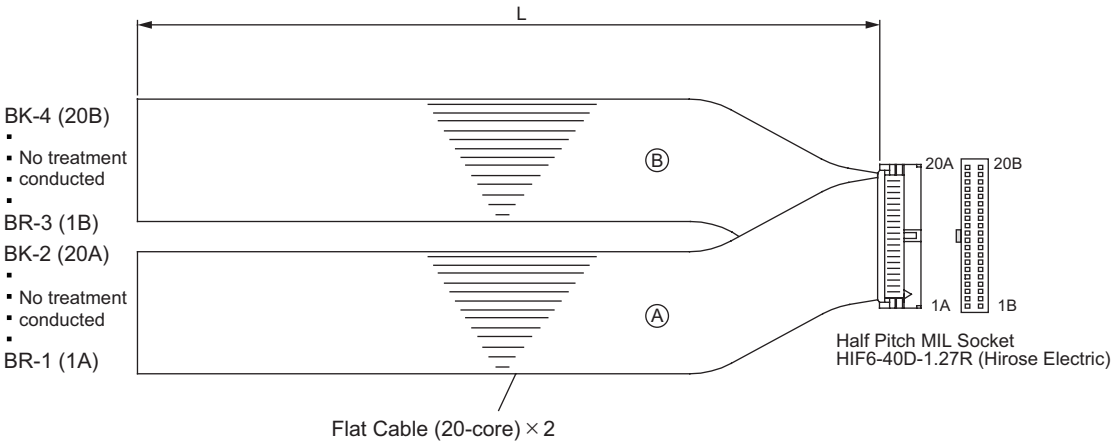

3.6 MEC Mode 3 (Solo Operation with Quick Teach)

3.6.1 Wiring Diagram (Connection of construction devices)

I/O type of the model code is SE.

[1] RCM-PST-0 (24V DC power supply type)

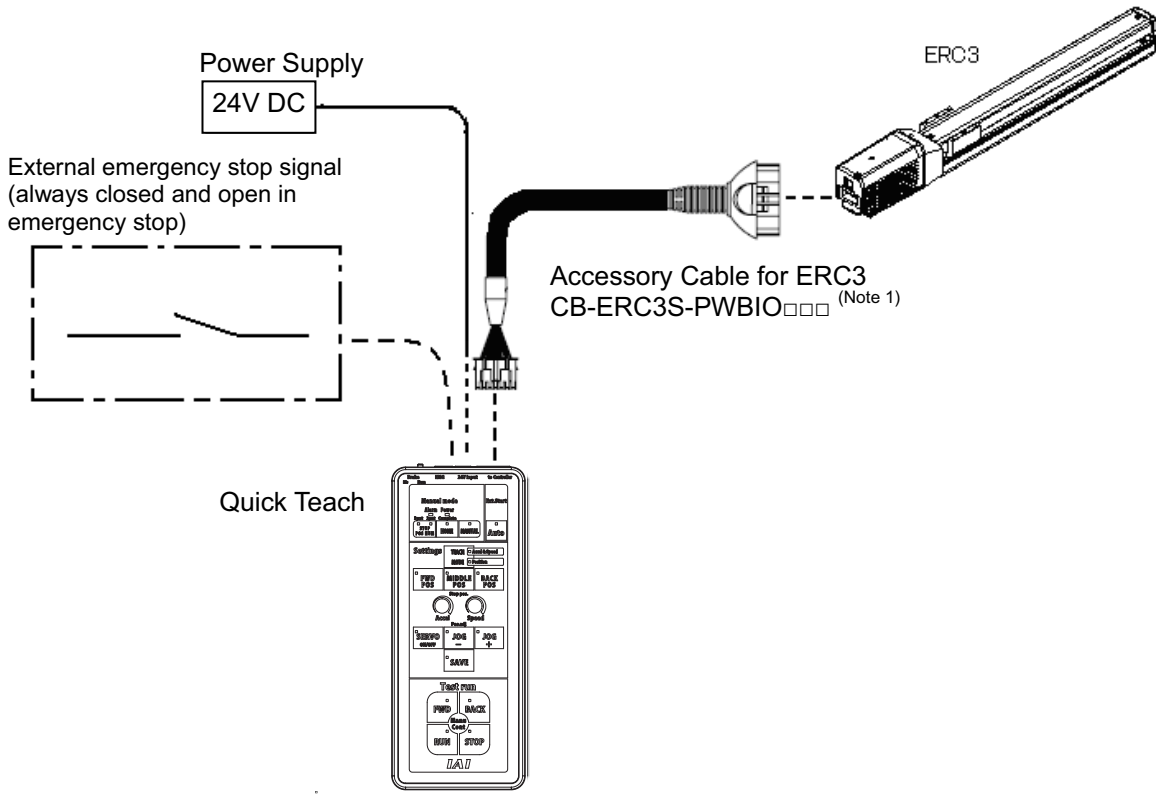

Note 1 □□□ indicates the cable length. (Example) 030 = 3m

[2] RCM-PST-1

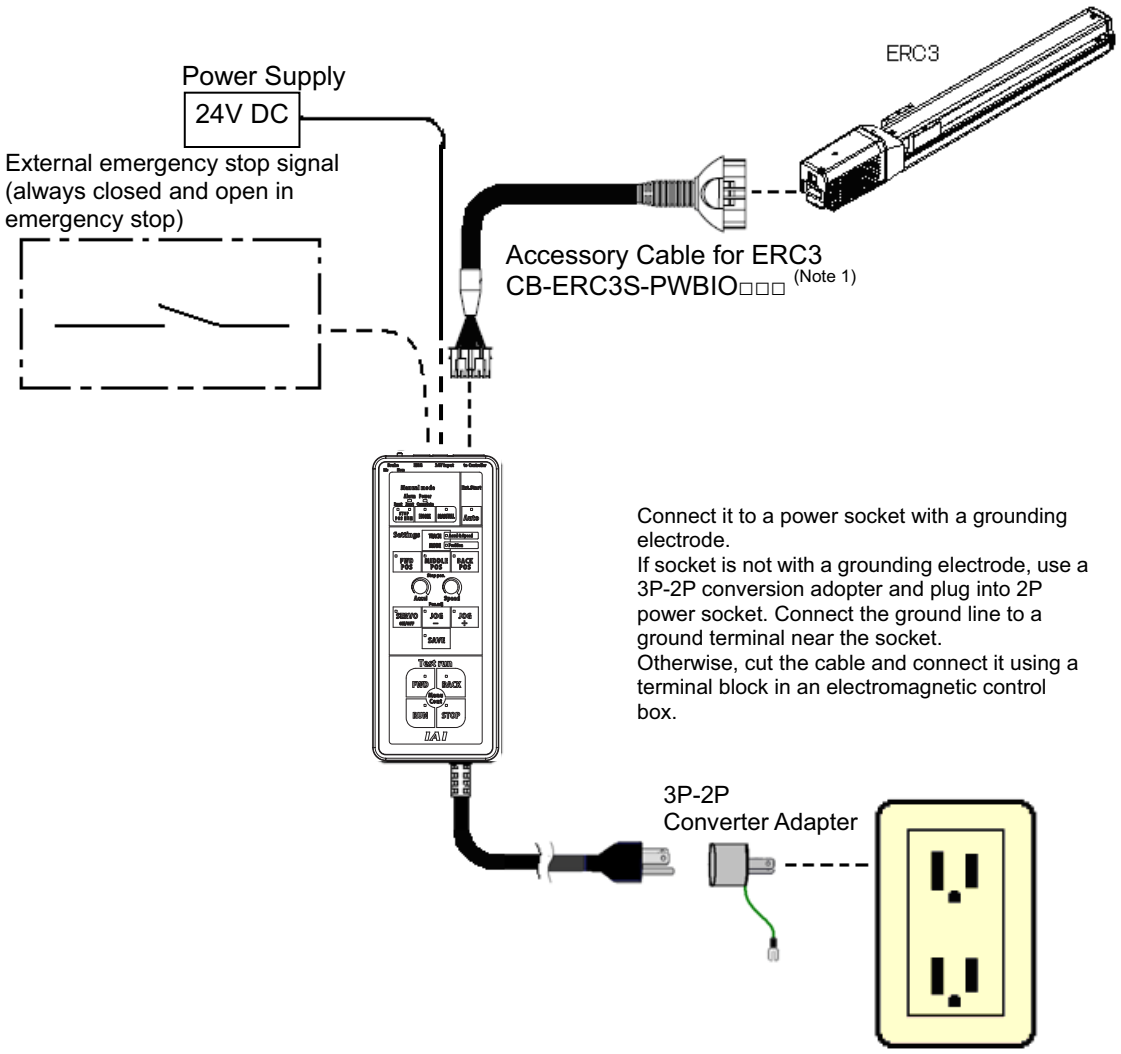

Note 1 □□□ indicates the cable length. (Example) 030 = 3m

⚠ Caution:

In case it is necessary to use a terminal block in an electromagnetic control box, cut off the 3P plug to connect the line.
In that case, do not attempt to share the ground line with other devices or join with others.
For the wiring, follow the cable colors described below.

Electric wire color	Signal Name	Description
BR	L	Power supply
BL	N	
YW & GN	PE	Ground wire

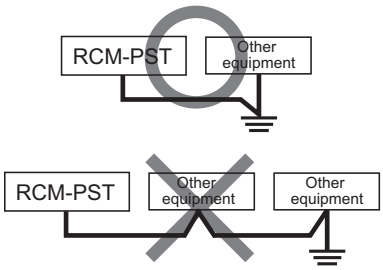

[3] RCM-PST-2/RCM-PST-EU

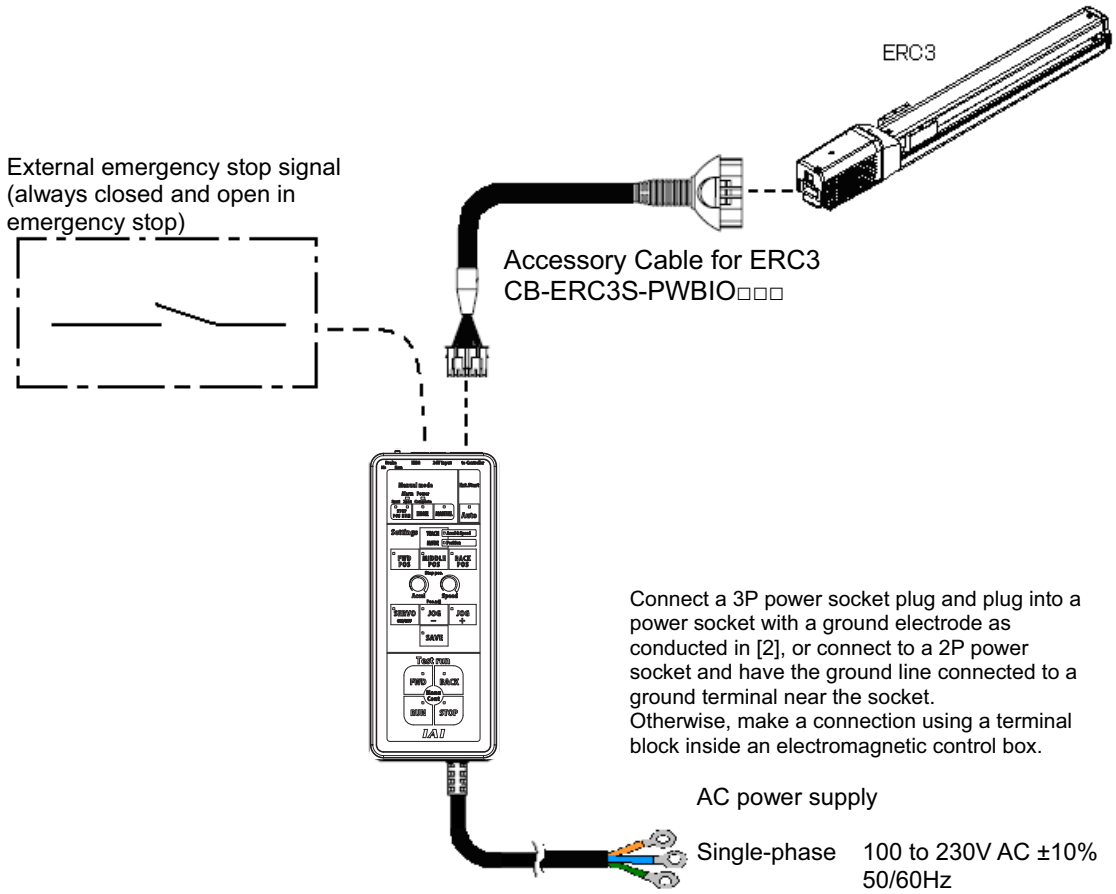

Note 1 □□□ indicates the cable length. (Example) 030 = 3m

⚠ Caution:

In case it is necessary to use a terminal block in an electromagnetic control box, do not attempt to share the ground line with other devices or join with others.

Electric wire color	Signal Name	Description
BR	L	Power supply
BL	N	
YW & GN	PE	Ground wire

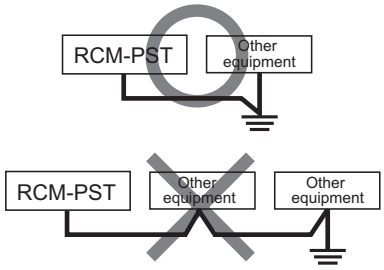

3.7 Wiring Method

3.7.1 Wiring of Actuator

Use a dedicated connection cable of IAI for connection.

[1] PIO type power and I/O cable (Model : CB-ERC3P-PWBIO□□□)

□□□ indicates the cable length L. (Example 030 = 3m), MAX. 10m

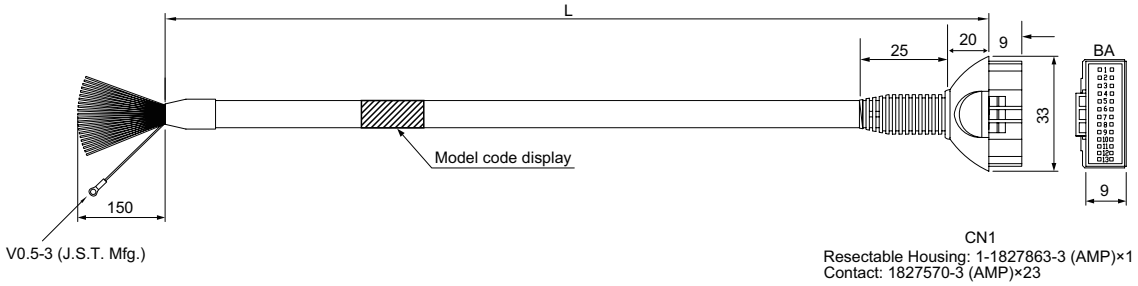

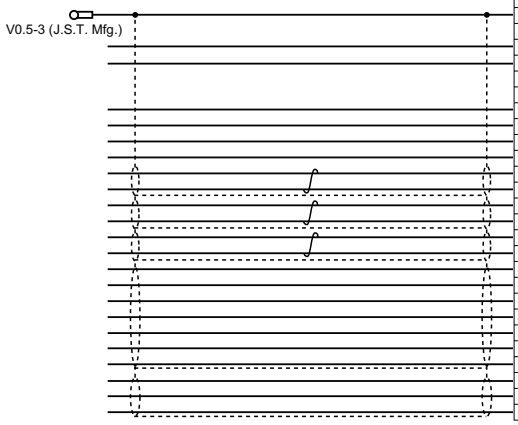

Pin No.	Signal Name	Cable Color	Cable Size
A1	FG	Drain	AWG22
A2	N.C	–	–
A3	BK	RD 1	AWG28
A4	EMG	OR 1	
A5	N.C	–	–
A6	N.C	–	–
B1	CP	BR	AWG22
B2	CP_GND	RD	
B3	MP	OR	AWG19
B4	MP_GND	YW	
B5	SA	GN	AWG28
B6	SB	BR 1	
A7	/PP	BL	
B7	PP	PU	
A8	/NP	GY	
B8	NP	WT	
A9	IN0	BR 2	
B9	IN1	RD 2	
A10	IN2	OR 2	
B10	IN3	YW 2	
A11	IN4	GN 2	
B11	IN5	BL 2	
A12	OUT0	PU 2	
B12	OUT1	GY 2	
A13	OUT2	WT 2	
B13	OUT3	BK	

● Cable bending radius

It is a robot cable, which can be used for moving parts.

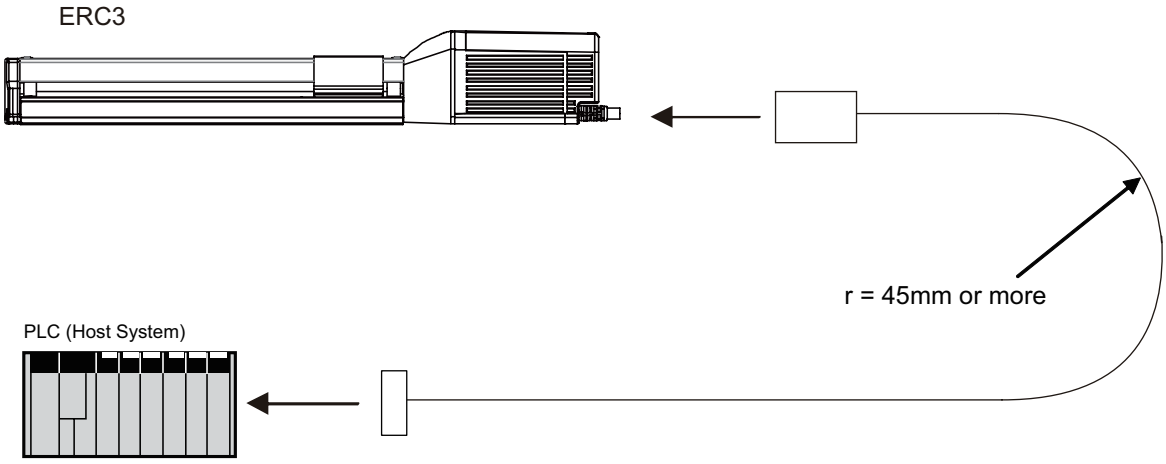

[2] SIO type power and I/O cable (Model : CB-ERC3S-PWBIO□□□)
□□□ indicates the cable length L. (Example 030 = 3m), MAX. 10m

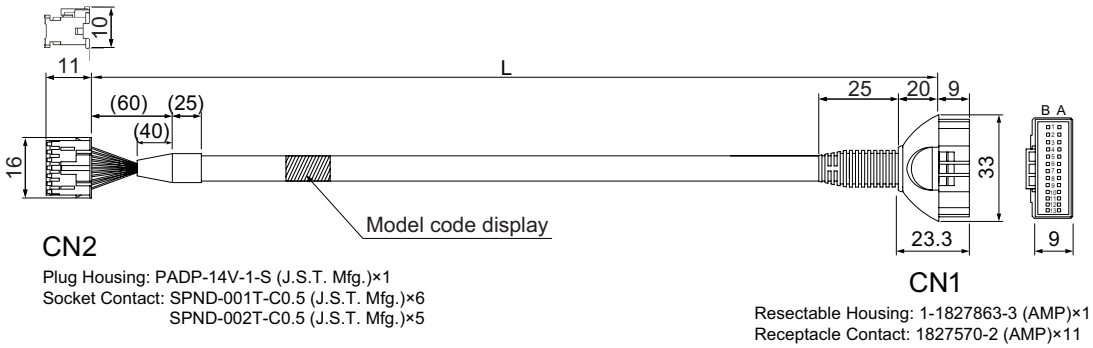

CN2

Signal Name	Pin No.
SB	1
SA	2
EMG	3
BK	4
BAT	5
BGND	6
CP	7
CP_GND	8
MP	9
MP_GND	10
N.C	11
N.C	12
N.C	13
FG	14

CN1

Pin No.	Signal Name
A1	FG
A2	–
A3	BK
A4	EMG
A5	BGND
A6	BAT
B1	CP
B2	GND<CP>
B3	MP
B4	GND<MP>
B5	SA
B6	SB
A7	N.C
B7	N.C
A8	N.C
B8	N.C
A9	N.C
B9	N.C
A10	N.C
B10	N.C
A11	N.C
B11	N.C
A12	N.C
B12	N.C
A13	N.C
B13	N.C

● Cable bending radius
It is a robot cable, which can be used for moving parts.

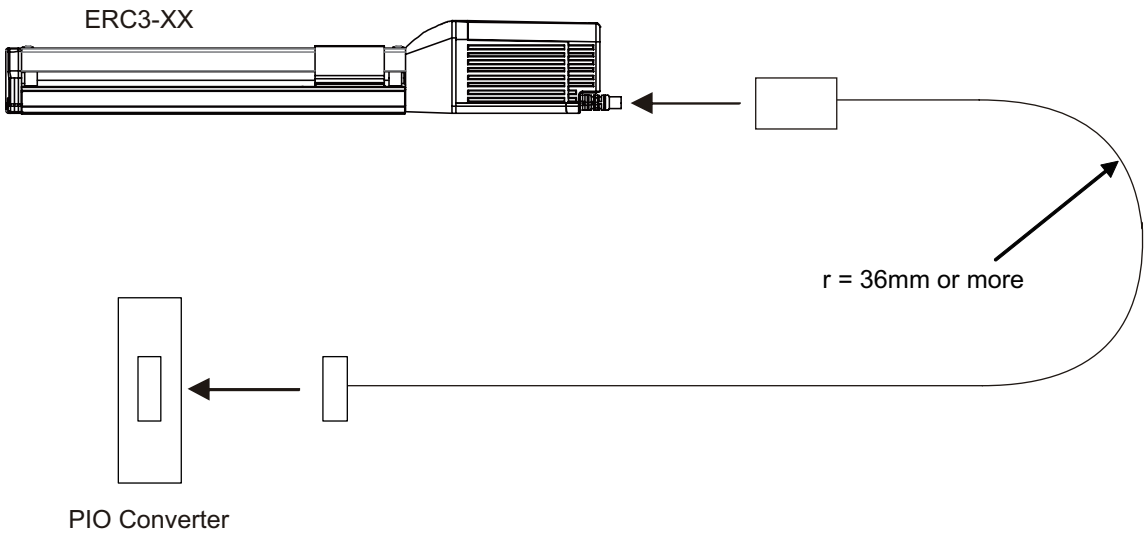

3.7.2 Wiring between PIO Converter and Quick Teach

SIO communication cable (Model: CB-PST-SIO050)
Cable length = 5m

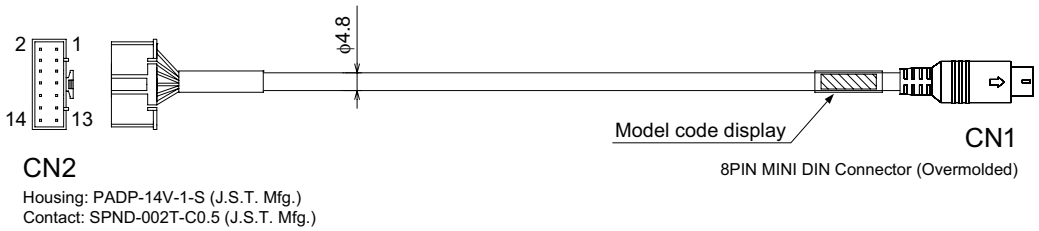

CN2

Signal Name	Pin No.
SGB	1
SGA	2
EMG	3
N.C	4
N.C	5
TGND	6
N.C	7
GND	8
N.C	9
GND	10
24V	11
N.C	12
N.C	13
N.C	14

120Ω
1/4W

CN1

Pin No.	Signal Name
1	SGB
2	SGA
3	SV
4	N.C
5	N.C
6	24V
7	GND
8	EMGB
GND	

3.7.3 Wiring between PIO Converter and Host Controller (e.g. PLC)

The connection of I/O for PIO Converter is to be conducted with the dedicated I/O cable. The cable length is shown in the model code of PIO Converter. Check the model code of PIO Converter. Selection can be made from 3m or 5m as well as standard 2m. 10m is also applicable at maximum if purchased separately. [Refer to 1.1.5 How to read the model]
Also, the end of the cable harness to be connected to the host controller (PLC, etc.) is just cut and no treatment is conducted so the wiring layout can be performed freely.

Model: CB-PAC-PIO□□□
(□□□ indicates the cable length L. Example 020 = 2m)

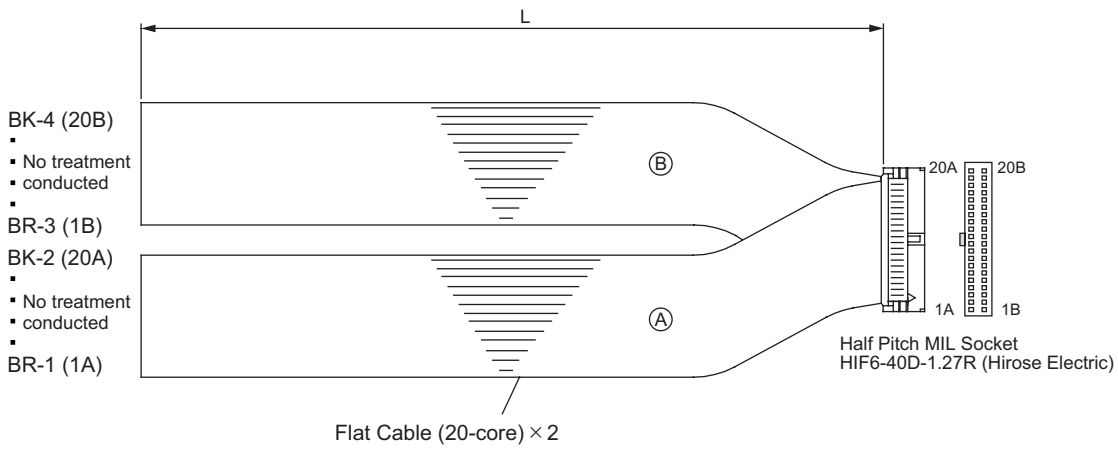

No.	Cable Color	Wiring	No.	Cable Color	Wiring
1A	BR-1	Flat Cable Ⓐ (Press Welding) AWG28	1B	BR-3	Flat Cable Ⓑ (Press Welding) AWG28
2A	RD-1		2B	RD-3	
3A	OR-1		3B	OR-3	
4A	YW-1		4B	YW-3	
5A	GN-1		5B	GN-3	
6A	BL-1		6B	BL-3	
7A	PL-1		7B	PL-3	
8A	GY-1		8B	GY-3	
9A	WT-1		9B	WT-3	
10A	BK-1		10B	BK-3	
11A	BR-2		11B	BR-4	
12A	RD-2		12B	RD-4	
13A	OR-2		13B	OR-4	
14A	YW-2		14B	YW-4	
15A	GN-2		15B	GN-4	
16A	BL-2		16B	BL-4	
17A	PL-2		17B	PL-4	
18A	GY-2		18B	GY-4	
19A	WT-2		19B	WT-4	
20A	BK-2		20B	BK-4	

For the signal assignment of each wire, refer to the following considering the operation mode.
1) Positioner Mode 2 ····· 3.3.3 [3] PIO Circuit
2) MEC Mode 2 ····· 3.5.3 [3] PIO Circuit

⚠ Warning: For wiring, please follow the warnings stated below. When constructing a system as the machinery equipment, pay attention to the wiring and connection of each cable so they are conducted properly. Not following them may cause not only a malfunction such as cable breakage or connection failure, or an operation error, but also electric shock or electric leakage, or may even cause a fire.

- Use dedicated cables of IAI indicated in this instruction manual. Contact us if you wish to have a change to the specifications of the dedicated cables.
- Make sure to turn the power off in the process of power line or cable connection or disconnection.
- Do not attempt to cut a dedicated cable with connectors on both ends to extend, shorten or re-joint it.
- Hold the dedicated cable to avoid mechanical force being applied to the terminals and connectors.
- Use a cable pipe or duct to have an appropriate protection when there is a possibility of mechanical damage on a dedicated cable.
- In case a dedicated cable is to be used at a moving part, make sure to lay out the cable without applying any force to pull the connector or extreme bend on the cable. Do not attempt to use the cable with a bending radius below the allowable value.
- Make certain that the connectors are plugged properly. Insufficient connection may cause an operation error, thus it is extremely risky.
- Do not lay out the cables to where the machine runs over them.
- Pay attention to the cable layout so it would not hit peripherals during an operation. In case it does, have an appropriate protection such as a cable track.
- When a cable is used hanging on the ceiling, prevent an environment that the cable swings with acceleration or wind velocity.
- Make sure there is not too much friction inside the cable storage equipment.
- Do not apply radiated heat to power line or cables.
- Have a sufficient radius for bending, and avoid a bend concentrating on one point.

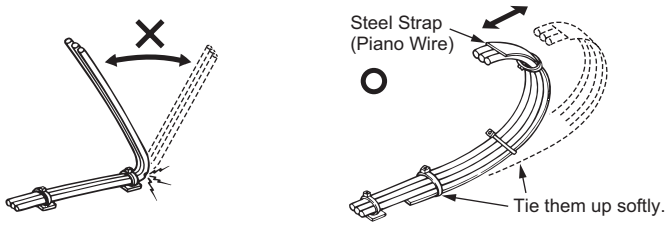

- Do not let the cable bend, kink or twist.

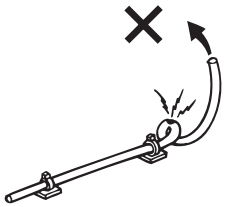

- Do not pull the cable with a strong force.

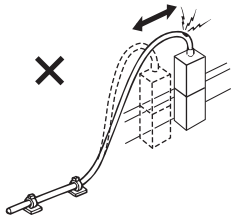

- Pay attention not to concentrate the twisting force to one point on a cable.

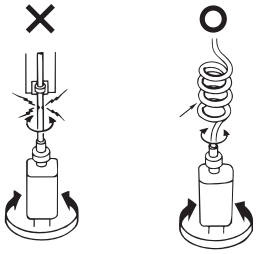

- Do not pinch, drop a heavy object onto or cut the cable.

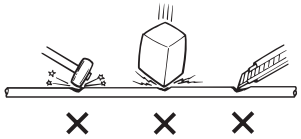

- When a cable is fastened to affix, make sure to have an appropriate force and do not tighten too much.

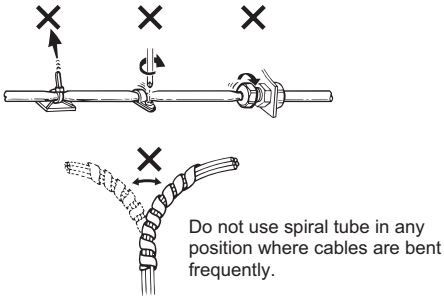

- PIO line, communication line, power and driving lines are to be put separately from each other and do not tie them together. Arrange so that such lines are independently routed in the duct.

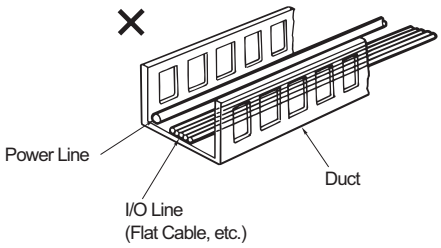

- If using a cable track, arrange the wiring so that there is no entanglement or kink of the cables in the cable carrier or flexible tube, and do not bind the cables so that the cables are relatively free. (Arrange the wiring so the cables are not to be pulled when bent.)

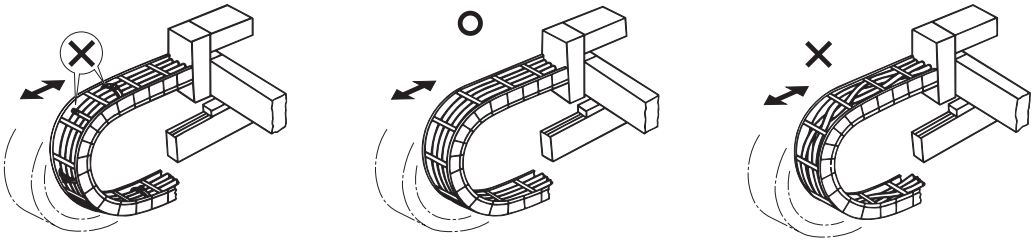

- The occupied volume rate for the cables, etc., inside the cable track should be 60% or less.

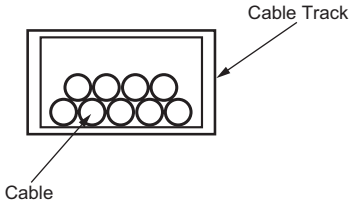

3.7.4 Wiring of PIO Converter Power Line Connector

The wires of the power supply and the emergency stop circuit are to be connected to the enclosed connector (plug). Strip the sheath of the applicable wires for 10mm and insert them to the connector. Push a protrusion beside the cable inlet with a small slotted screwdriver to open the inlet. After inserting a cable, remove the screwdriver from the protrusion to fix the cable.

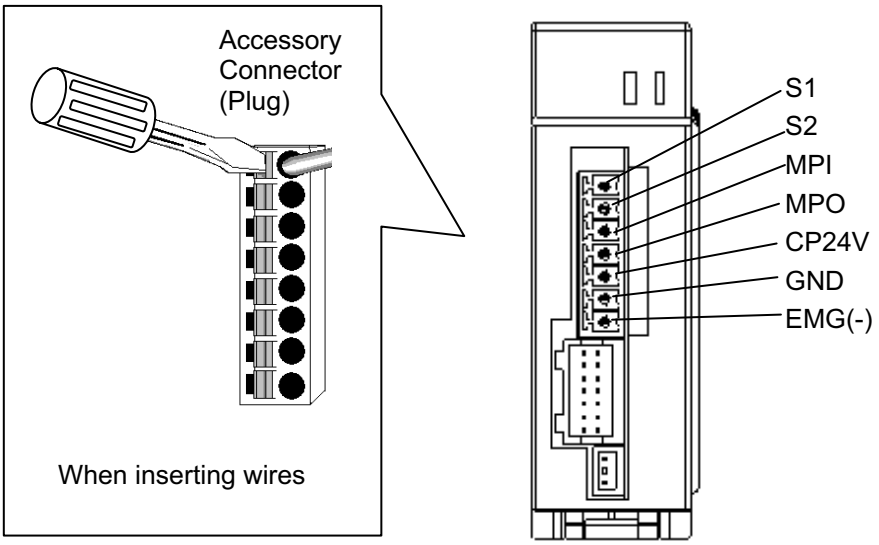

● Power Supply Connector

Connector Name	Power Supply Connector	
Cable Side	MC1.5/7-ST-3.5	Enclosed in standard package
Controller Side	MC1.5/7-G-3.5	

Pin No.	Signal Name	Contents of Signals	Applicable cable diameter
1	EMG(-)	Emergency-stop input	KIV AWG20 (0.5mm^2)
2	GND	Power Input (24V DC ±10%)	KIV AWG16 (1.25mm^2)
3	CP24V		
4	MPO	Motor drive power supply line	KIV AWG16 (1.25mm^2)
5	MPI		
6	S2	Teaching pendant Signal of emergency stop push button	KIV AWG20 (0.5mm^2)
7	S1		

3.7.5 Pulse Converter: AK-04 (Optional accessory)

This pulse converter is necessary when pulse train control is required and the output pulse of the host controller is the open collector type. It converts the command pulse of the open collector type to the differential type.
Use the enclosed e-CON connector for wiring.
The available cable wire size is AWG22 to 26 (less than 0.2 to 0.3mm^2) equivalent to KIV, finished out diameter ϕ1.0 to 1.2mm.
[Refer to 10.2.4 Handling of e-CON connector]

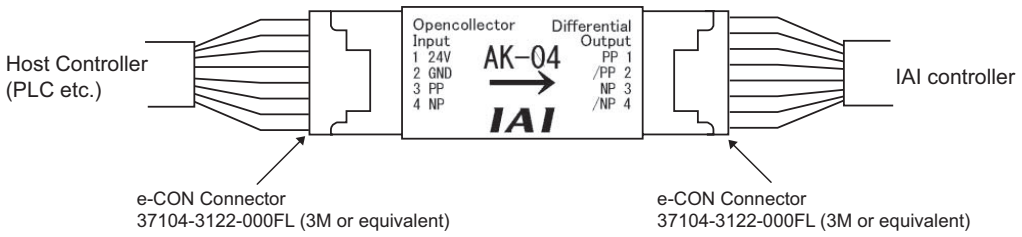

⚠ Caution

1) Pay attention not to insert wrongly because it is the same e-CON connector as input and output. Putting the power on with the insertion being wrong will burn AK-04.
2) Use the pulse converter in the surrounding temperature range between 0°C and 40°C.
3) The temperature increase of about 30°C occurs during operation. Accordingly, neither install several pulse converters in close contact nor install them within a duct. Do not install the pulse converter near other heating devices.
4) If more than one pulse converters are installed, set a pulse converter apart from another by 10mm or more.
5) Make the wiring between the host controller (PLC, etc.) and AK-04 as short as possible. Long one is easy to pick the noise. Also make the wiring between AK-04 to ERC3 as short as possible.
   Place AK-04 close to the host controller.

A recommended installation sample is shown in the figure below.

- Make the cable length between the host controller and pulse converter as short as possible.
- Keep pulse converters separated for 10mm or more from each other.

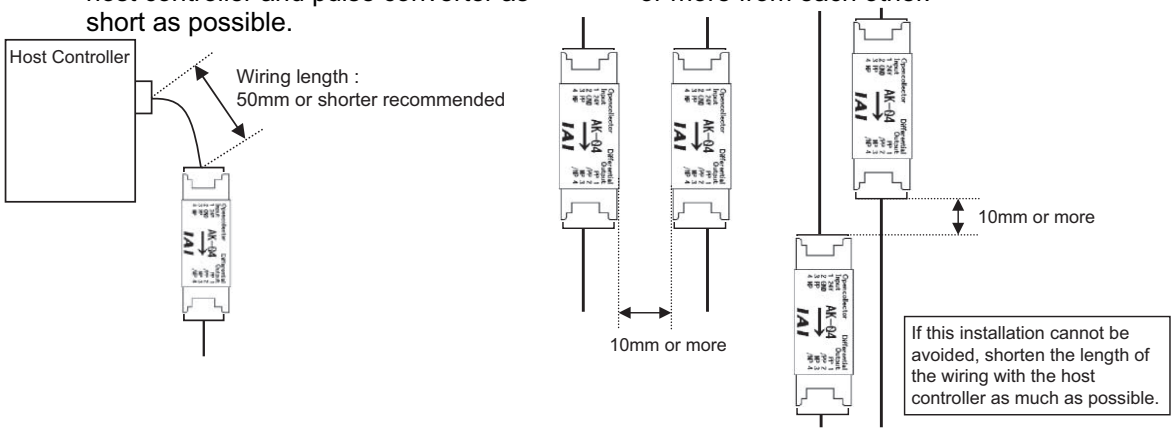

3.7.6 Teaching Port Connector Connection of ERC3 Main Unit

Teaching Port is for the connection of teaching tools (except for Quick Teach) only.
Connect the connector of a teaching tool in the way the insertion mark comes to the bottom side.
It is able to put in/take OFF the connector while ERC3 power is ON.

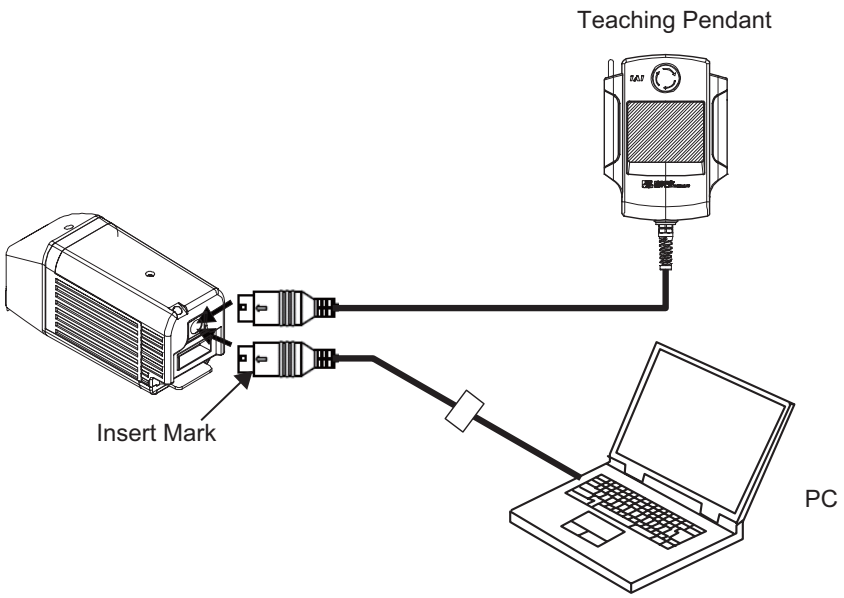

⚠ Caution: Removing the teaching pendant while the power is ON causes a transient emergency stop. Thus, the actuator in operation will be stopped.
Do not disconnect the teaching pendant during the operation.

3.7.7 Connection of SIO Connector of PIO Converter

SIO Connector of PIO Converter can be used not only for the connection of teaching tools including Quick Teach, but also for serial communication with a host controller (PLC, touch panel or PC). For the operation of those devices, refer to the instruction manual for each device.
[Refer to Instruction manuals related to this product, which are contained in the DVD.]
Connect the connector of a teaching tool in the way the insertion mark comes to the left side.
It is able to put in/take OFF the connector while ERC3 power of PIO Converter is ON.

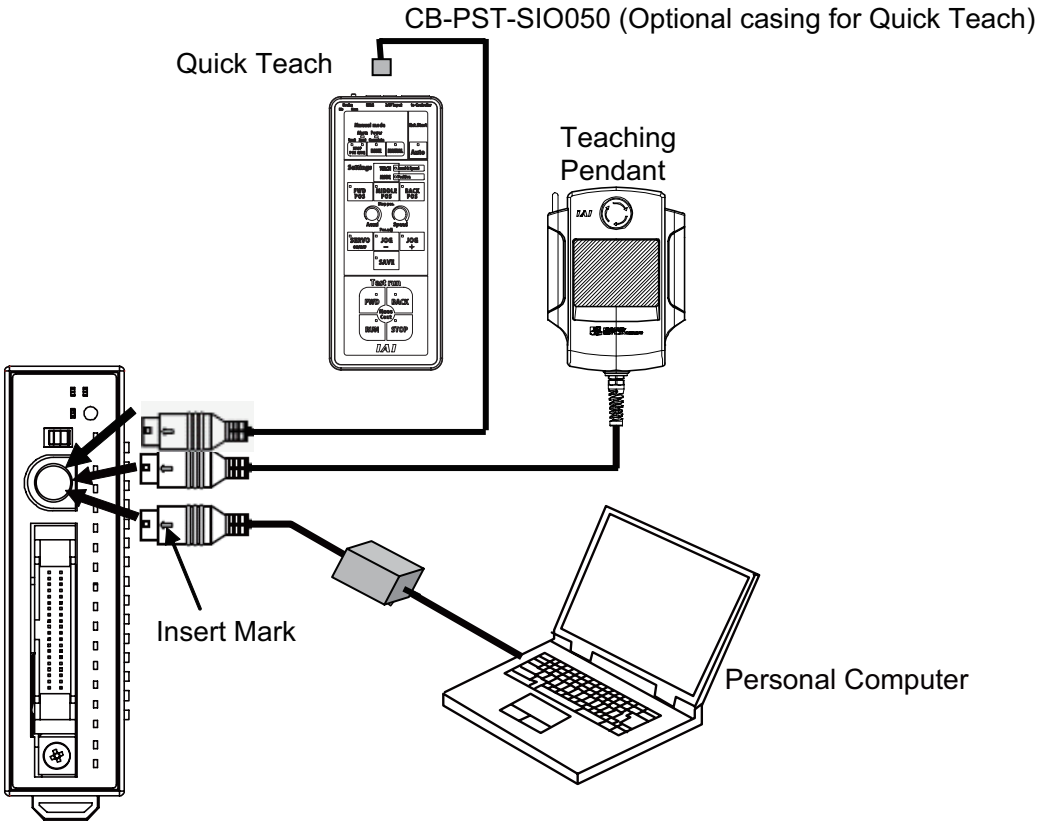

⚠ Caution: Removing the teaching pendant while the power is ON causes a transient emergency stop. Thus, the actuator in operation will be stopped.
Do not disconnect the teaching pendant during the operation.

Chapter 4 Operation

4.1 Basic Operation

ERC3 has 6 types of operation method when combined with peripheral devices. In addition, each operation method has several operation patterns to meet various ways of use.
Please note, though, that these patterns are to be determined by selecting the model code when in order, thus have an operation with a control logic that corresponds to the model code.
[Refer to Guideline for Control Method]

4.1.1 Basic Operation Methods

[1] Positioner Mode 1 (PIO Operation of ERC3)
Three types of operation patterns and 16 points of positioning at the maximum are available.

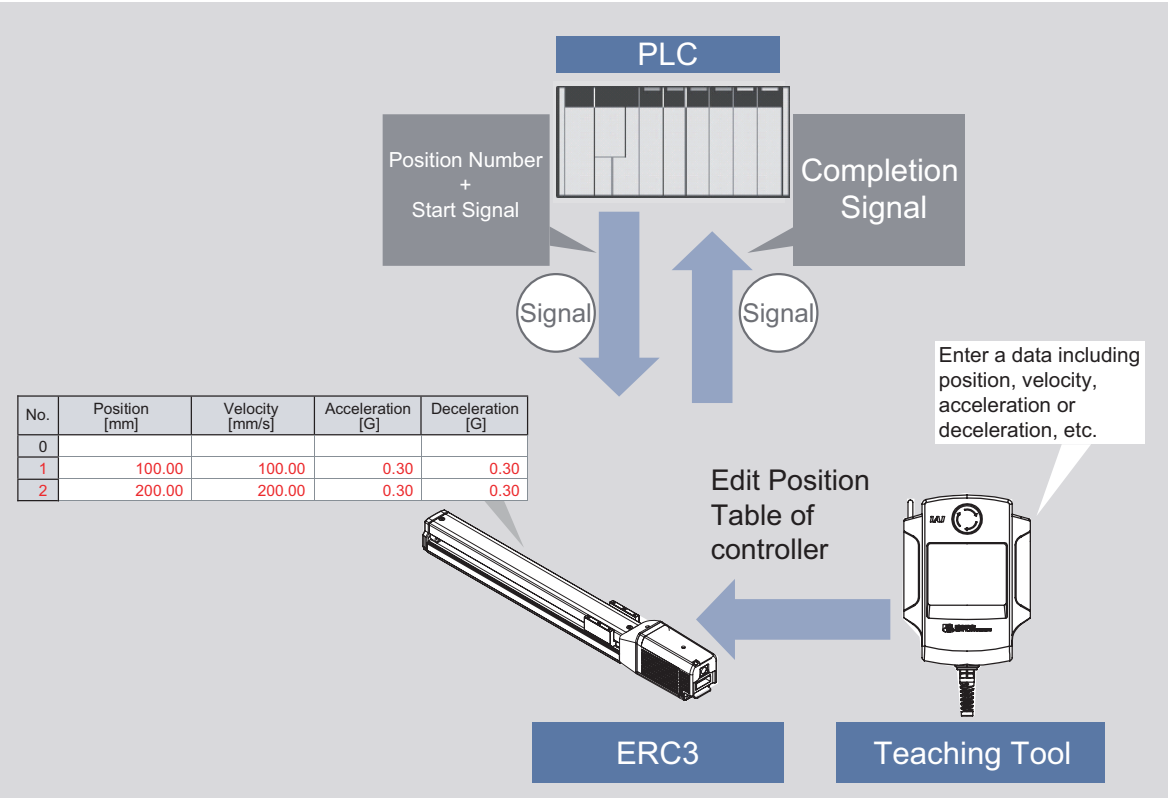

1) Set target positions (coordinate values), velocities, accelerations, and decelerations by the required number of positioning points in the position table by using a teaching tool such as PC software.

2) Enter the binary data of position numbers subject to positioning on the PLC and turn ON the start signal.

3) The actuator is placed at the proper coordinate value according to the positioning information in the specified position number.

4) After the positioning is completed, the completion signal is output.

The above procedure describes the basic operation method in the positioner mode 1.

[2] Pulse Train Control Mode (Pulse Train Operation of ERC3)

An operation by pulse train input is available. There are 2 patterns of operation modes, positioning and pressing.

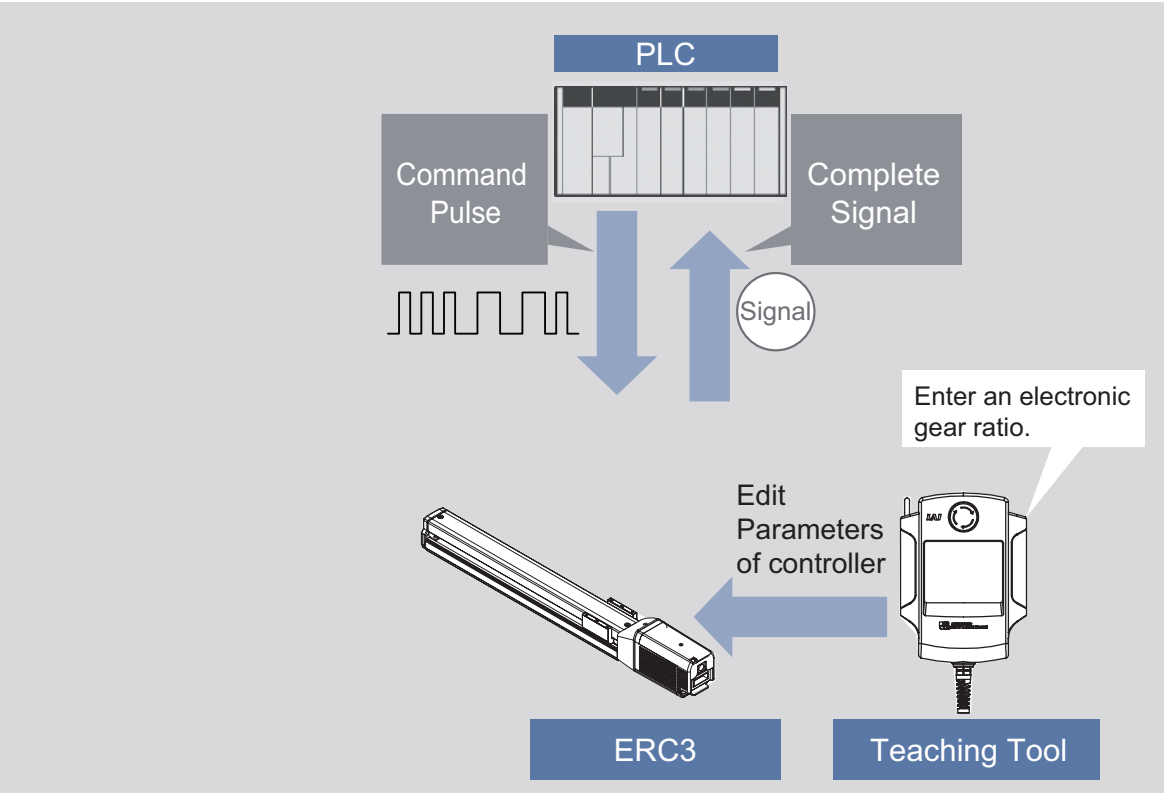

1) Set the pulse train format and the electric gear ratio (the distance of actuator movement in mm against 1 pulse) to the parameters in the ERC3 with using a teaching tool such as PC software.

2) Send pulses based on the moving distance of the actuator to the ERC3 from the PLC (positioning unit).

3) The ERC3 multiplies the entered number of pulses by the electrical gar ratio to get the moving distance. The actuator is moved by the moving distance from the current position. The velocity varies depending on the entered pulse rate (frequency).

4) After the positioning is completed, the completion signal is output.

The above procedure describes the basic operation method in the pulse train control mode.

[3] Positioner Mode 2 (Extended Operation of ERC3)

By using the optional PIO Converter, a selection from six types of operation patterns and 512 points at the maximum of positioning are available. Also, the unit can be applicable for Single Absolute Type.

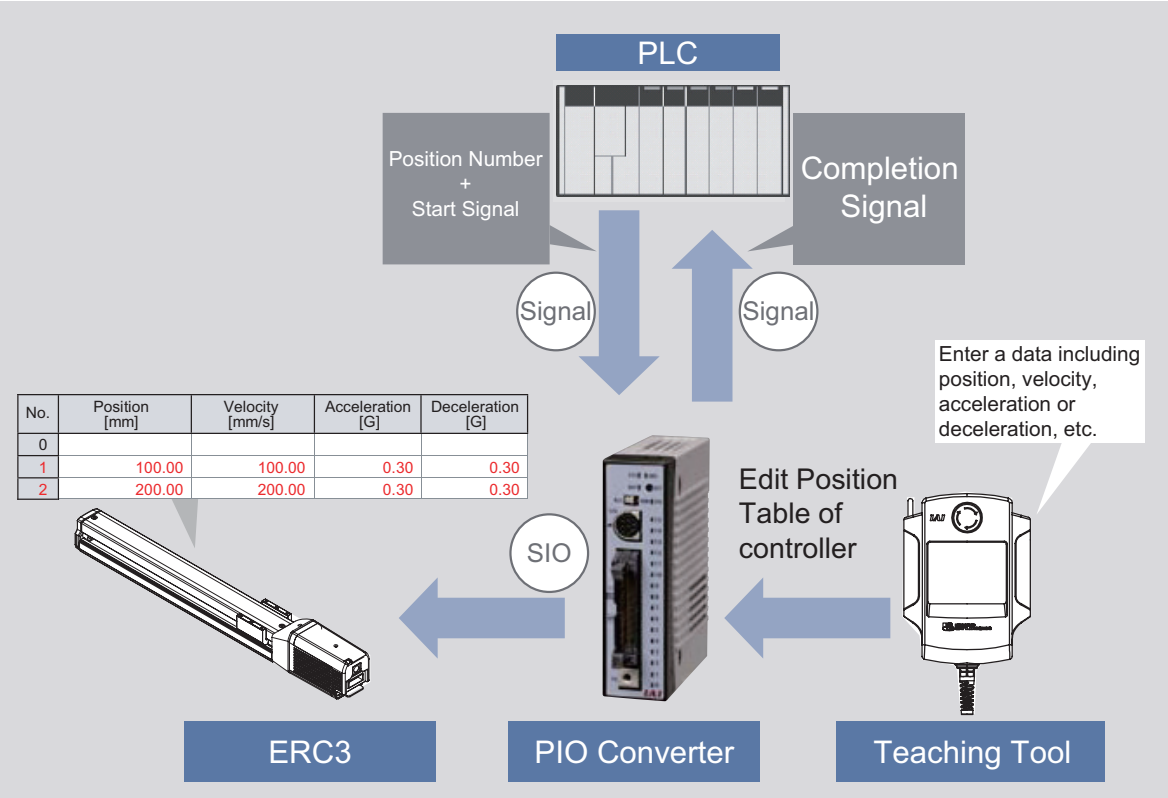

1) Set target positions (coordinate values), velocities, accelerations, and decelerations by the required number of positioning points in the position table by using a teaching tool such as PC software.

2) Enter the binary data of position numbers subject to positioning on the PLC and turn ON the start signal.

3) The actuator is placed at the proper coordinate value according to the positioning information in the specified position number.

4) If the positioning is completed, the binary data of the position number is output. The completion signal is also output.

The above procedure describes the basic operation method in the positioner mode 2.

[4] MEC Mode 1

A simple operation with Quick Teach is available and a control same as for the air cylinder is available.
There are two operation patterns, 2-point positioning and 3-point positioning.

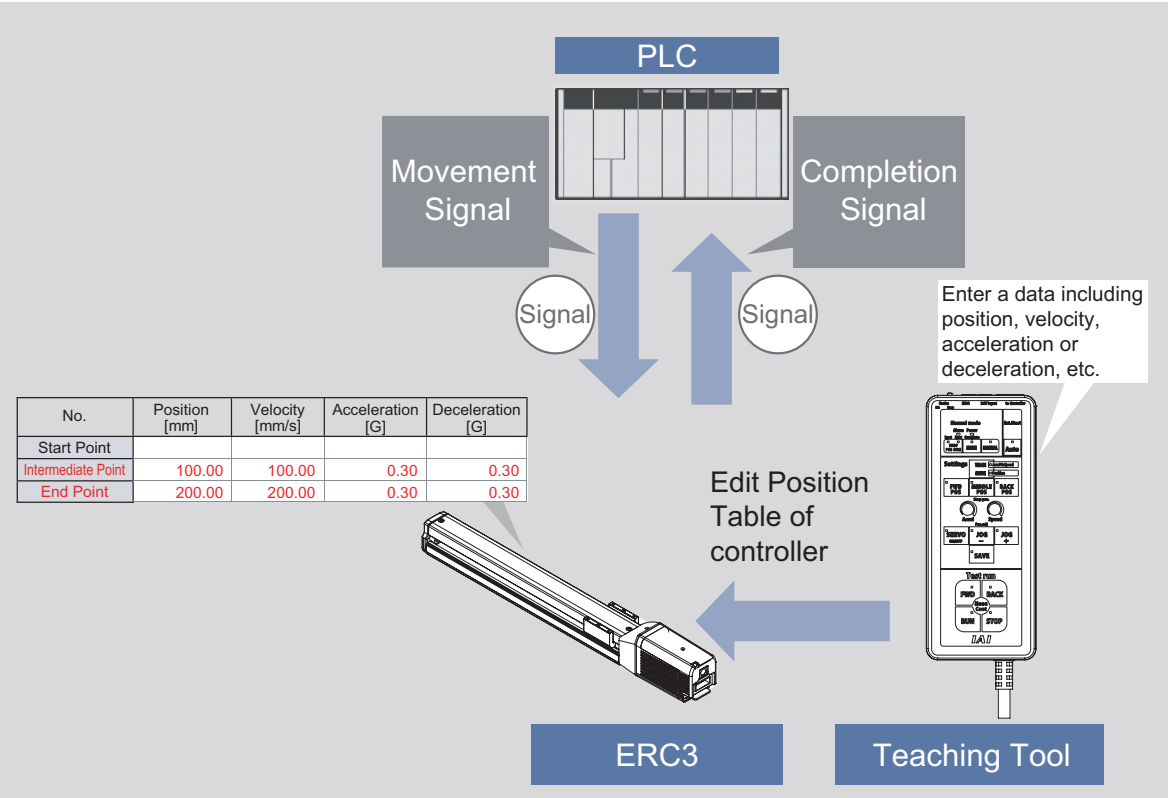

No.	Position [mm]	Velocity [mm/s]	Acceleration [G]	Deceleration [G]
Start Point				
Intermediate Point	100.00	100.00	0.30	0.30
End Point	200.00	200.00	0.30	0.30

1) Using a teaching tool such as the MEC PC software, select an operation pattern, and set the target position (coordinate values), speed and acceleration/deceleration data that suits to the selected pattern.

2) Turn the start signal ON for the one desired to have a positioning from the host such as PLC.

3) The actuator is placed at the proper coordinate value according to the positioning information in the specified operation condition table.

4) If the positioning is completed, the completion signal is also output.

The above procedure describes the basic operation method in the MEC mode 1.

[5] MEC Mode 2

The operation method is the same as for MEC Mode 1. It becomes applicable for Simple Absolute Type by using PIO Converter.

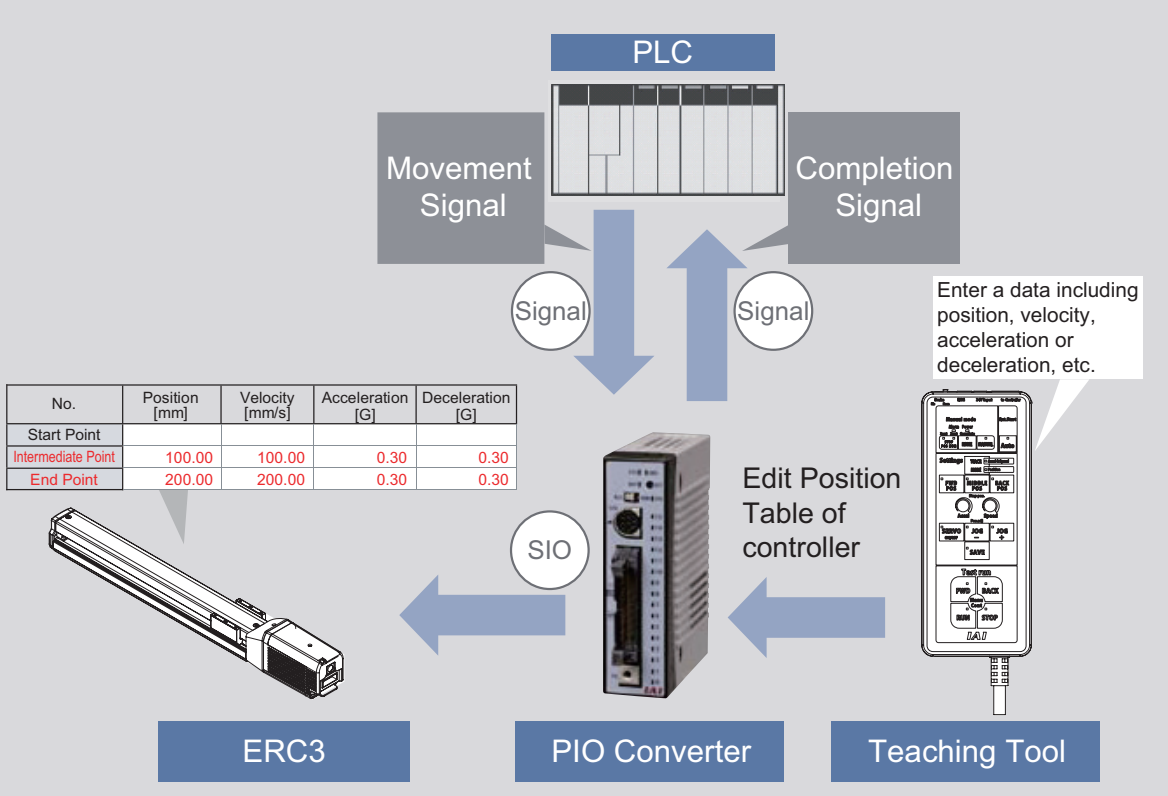

[6] MEC Mode 3

Independent operation is available with Quick Teach, and enables to have such operations as a test run of actuators.

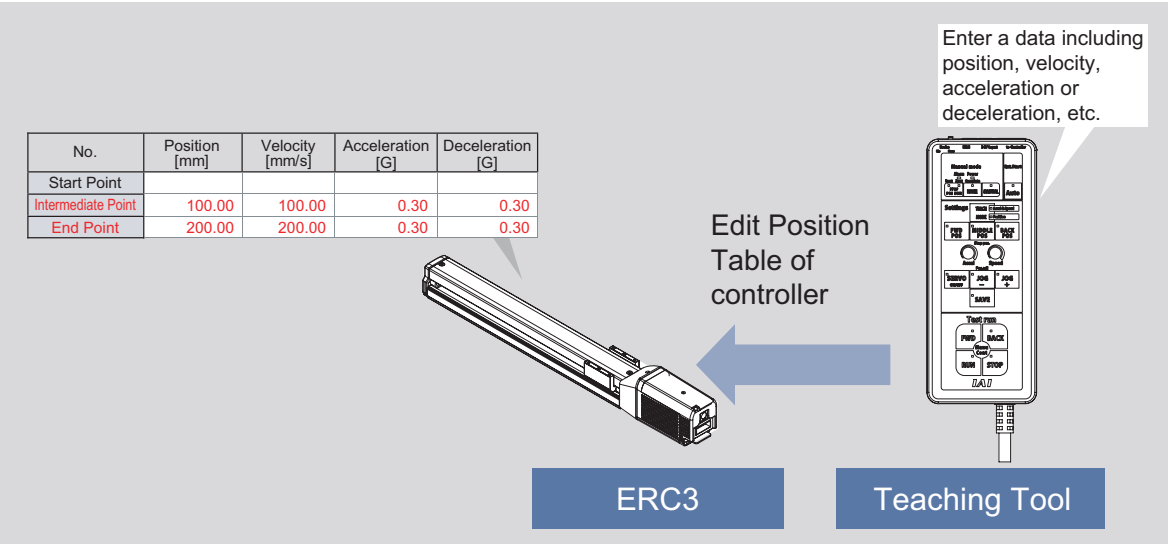

1) By selecting the number of stop positions, teaching can be conducted with JOG operation.
2) Acceleration/deceleration and speed settings can be performed with an easy operation.
3) An operation can be made with using the operation functions (forward/backward/continuous operations) of Quick Teach.

4.1.2 Parameter Settings

Parameter data should be set to be suit to the system or application. Parameters are variables to be set to meet the use of the controller in the similar way as settings of the ringtone and silent mode of a cell phone and settings of clocks and calendars.

(Example)

Soft Stroke Limit	:	Set a proper operation range for definition of the stroke end, prevention of interferences with peripherals and safety.
Zone Output	:	Set to require signal outputs in an arbitrary position zone within the operation zone.

Parameters should be set to meet the use of the controller prior to operation. Once set, they may not set every operation.
Refer to Chapter 6, 6.3 for the parameter types and the details.

4.2 Operation in Positioner Mode

4.2.1 Set of Position Table

[It is not necessary to set up for Pulse Train Control Mode. Refer to Section 4.4 [2] for MEC Mode.]

The values in the position table can be set as shown below. The number of position will be displayed according the selected pattern. If specifying the speed, acceleration, and deceleration is not required, only the position data needs to be written. The speed, acceleration, and deceleration are automatically set to the data defined by the relevant parameters. Therefore, setting the speed, acceleration, and deceleration data often used to the relevant parameters makes input easy.

1) No.	2) Position [mm]	3) Velocity [mm/s]	4) Accele-ration [G]	5) Decele-ration [G]	6) Pressing [%]	7) Thresh-old [%]	8) Positioning width [mm]	9) Zone+ [mm]	10) Zone- [mm]	11) Acceleration/ Deceleration mode	12) Incre-mental	13) Transported load	14) Stop mode	15) Vibration suppress No.	Comment
0	0.00	100.00	0.30	0.30	0.00	0.00	0.10	0.00	0.00	0	0	0	0	0	
1	100.00	100.00	0.30	0.30	0.00	0.00	0.10	0.00	0.00	0	0	0	0	0	
2	150.00	200.00	0.30	0.30	50.00	0.00	30.00	0.00	0.00	0	0	0	0	0	
3	200.00	400.00	1.00	1.00	0.00	0.00	0.10	0.00	0.00	0	0	0	0	1	
4	200.00	200.00	0.30	0.30	0.00	0.00	0.10	250.00	230.00	0	0	0	0	2	
5	500.00	50.00	0.10	0.10	0.00	0.00	0.10	0.00	0.00	0	0	0	0	0	
6															
7															

1) Position No.····· The number is specified by PLC at start.

> ⚠ Caution: In an operation mode that indicates the position number in a binary number, do not use Position No.0 if there is a margin in the positions.
> At the first servo ON after power ON, the completed position No. output is 0 even if the actuator is not located at position No.0. The actuator enters into the same state as that at positioning to position No.0. The completed position No. output is 0 during movement of the actuator. To use position No.0, get the command history by using the sequence program to check completed position No.0 based on the history.

2) Position [mm] ····· Positioning coordinate value. Enter it as the distance from the home position.
For pitch feed (relative movement = incremental feed), enter the pitch width.
A value with – indicates that the actuator moves toward the home position. A value without – indicates that the actuator moves to be away from the home position.

3) Velocity [mm/s]····· Set the velocity in the operation.
Do not attempt to input a value more than the maximum velocity or minimum velocity (Note 1).
(Note 1) For the minimum speed, you can either check in "1.2.1 Actuator" or figure out from the formula below.
Min. Speed [mm/s] = Lead Length [mm] / No. of Encoder Pluses / 0.001 [s]

4) Acceleration [G] ····· Set the acceleration at start.

5) Deceleration [G] ····· Set the deceleration at stop.

(Reference) How to set the acceleration is described below. The same idea can be applied to the deceleration.
1G = 9800mm/s^2: Accelerated to 9800mm/s per second
0.3G: Accelerated to 9800mm/s × 0.3 = 2940mm/s per second

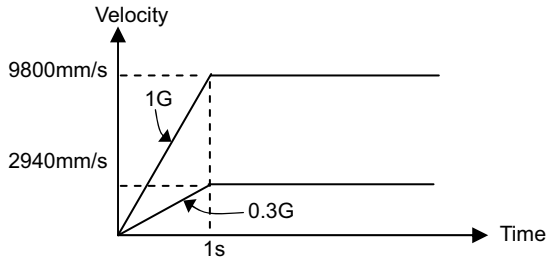

⚠ Caution: (1) Set the velocity, acceleration and deceleration so that they do not exceed the rating values described in the brochure or the instruction manual of the actuator. Failure to follow this may cause the life of the actuator to be shortened extremely.
(2) If shocks and/or vibrations appear on the actuator and/or the work, lower the acceleration and/or the deceleration. In such cases, do not continue the use of the actuator, otherwise the product life may be shortened extremely fast.
(3) If the carriage weight is extremely lighter than the rating carriage weight, acceleration/deceleration larger than their rating values to shorten the cycle time. Please contact IAI for the settings in such situation. Inform us of the weight, shape and mounting method of the work and the installation conditions of the actuator.

6) Pressing [%] ····· Setting proper data here allows pressing to be done. Set a pressing torque (limit current value) in %. If the value is set to 0, the normal positioning operation is performed.
The speed for the pressing operation is set in Parameter No.34.
If the setting of 3) is lower than the pressing velocity, the pressing process will be conducted with the velocity of 3).

⚠ Caution: If the pressing velocity is changed, the pressing force may differ from that specified in “1.2.1 Actuator”.
When the pressing velocity is changed, make sure to measure the actual pressing force before start using.

7) Threshold [%] ····· Unavailable. Do not set up.

8) Positioning width [mm] ·····In PIO Patterns 0 to 4 in Positioner Mode 1 (for ERC3 unit) and Positioner Mode 2 (when PIO Converter is used), the positioning complete signal is output when the remaining movement amount gets into the area that is set in them when positioning is conducted.
For pressing, actuator will first move to the position of the coordinate set in 2) at the set velocity, acceleration, and deceleration. It will then, performs pressing movement by the data set here.
For the positioning width, make its width at least 4 times larger than the minimum unit of the movement (movement amount of 1 pulse of the encoder) of the used actuator.
It is not the output range of the complete signal for the positioning command if PIO pattern 5 of PIO converter. Despite the specified position number, the relevant output signal LS* is turned ON when the actuator reaches the setting range. The operation is accomplished as if a sensor were installed to detect the actuator. PIO pattern 5 does not correspond to the pressing operation.

[Example for Positioner Mode 2, PIO Pattern 5 of PIO Converter]
The figure below shows the position table and the position at which each of the LS signals is turned ON. If the actuator passes any of the positioning width in the operation by another position number or manual operation in the servo-off state, the relevant LS signal is always turned ON.

No.	Position [mm]	Velocity [mm/s]	Accele-ration [G]	Decele-ration [G]	Pressing [%]	Thresh-old [%]	Positioning width [mm]	Zone+ [mm]	Zone- [mm]	Acceleration/ Deceleration mode	Incre-mental	Transported load	Stop mode
0	0.00	250.00	0.20	0.20	0	0	5.00	0.00	0.00	0	0	0	0
1	70.00	250.00	0.20	0.20	0	0	10.00	0.00	0.00	0	0	0	0
2	150.00	250.00	0.20	0.20	0	0	5.00	0.00	0.00	0	0	0	0

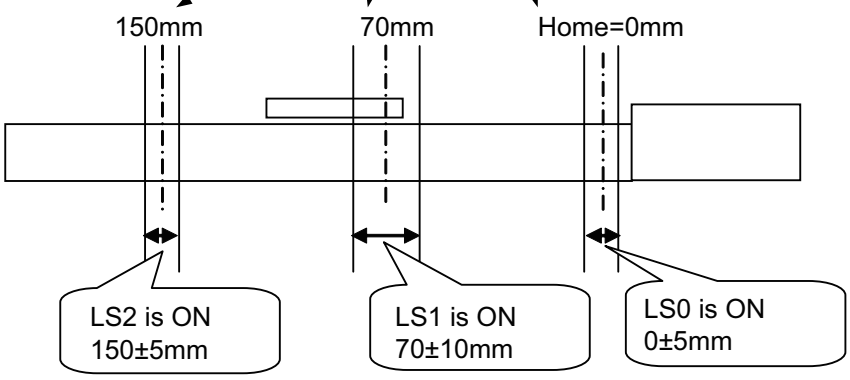

9) Zone + [mm] ·····Set the coordinate value on the positive side at which position zone output signal PZONE is turned ON. PZONE is set to ON in the zone between this value and the coordinate value on the negative side set in 10).
The feature follows the specified position number. It is valid only when the position is specified but invalid in another position operation.

10) Zone - [mm] ·····Set the coordinate value on the negative side at which position zone output signal PZONE is turned ON.

11) Acceleration/deceleration mode·····Select a proper acceleration/deceleration pattern depending on the load.

Set Value	Acceleration/ Deceleration Pattern	Operation
0	Trapezoid	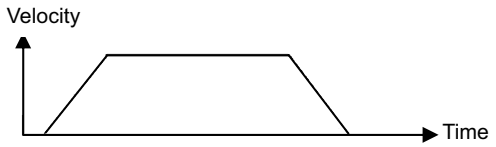
1	S-motion (Refer to Caution at S-shaped Motion)	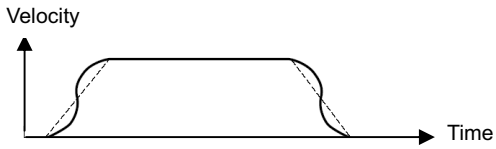 Set the S-motion rate with parameter No.56.
2	First-Order Lag Filter	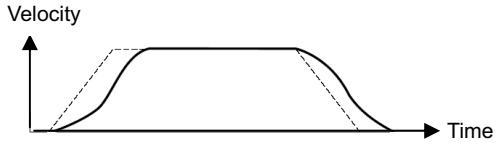 Set the delay time constant with parameter No.55.

⚠ Caution at S-shaped Motion:
1) Since it requires a speed change during the operation, even if having the position command that S-shaped motion is set while the actuator is moving, S-shaped motion control cannot be performed and will be the trapezoid control. Make sure to make a command while the actuator.
2) Do not use S-shaped acceleration/deceleration control if the setting of the acceleration time or the deceleration time exceeds 2 seconds. It will not provide the right operation.
3) Do not pause on the move during acceleration or deceleration. It will change the speed (acceleration) and may cause a danger.

12) Incremental·····Set to 1 for pitch feed (relative movement = incremental feed). The value set for the position in 1) indicates the pitch feed distance. With the value set to 0, positioning is defined to the position in 1) based on the absolute coordinate system.

⚠ Caution: In the pitch feed, do not perform a command with a pitch smaller than the minimum encoder resolution (lead/encoder pulse number) or that less than positioning accuracy repeatability.
There would be no deviation to occur even with the command because it is an operation command to the same position as the positioning complete condition, but the positioning control cannot be performed properly.
Pitch feed cannot be conducted with PIO Pattern 5 (Solenoid Valve Mode 2) of PIO Converter. Set it to “0”. Setting this to 1 causes the position data error to occur.

13) Transported load ·····Register 4 types of load weights with using the teaching tool, and choose the number from the registered numbers (0 to 3) that is to be used.
From the numbers (load weights) registered in this section, the smart tuning calculates the optimum speed and acceleration/deceleration.

[Refer to the instruction manual of each teaching tool for how to register the load weights and smart tuning.]

Setting	Name
0	Transported Load No.0
1	Transported Load No.1
2	Transported Load No.2
3	Transported Load No.3

14) Stop mode ·····Automatic servo OFF is enabled after a certain period from the completion of positioning for power saving.
A proper period can be selected from three parameters.

Setting	Operation after completion of operation	parameter No.
0	Servo ON not changed	–
1	Automatic servo OFF after certain period	36
2	Automatic servo OFF after certain period	37
3	Automatic servo OFF after certain period	38
4	Full servo control	–
5	Full-servo control for a certain time and then automatically turning servo OFF	36
6	Full-servo control for a certain time and then automatically turning servo OFF	37
7	Full-servo control for a certain time and then automatically turning servo OFF	38

⚠ Caution:
- No retaining torque is provided in automatic servo OFF. Pay sufficient attention to the setting because the actuator may be moved by external force applied to it.
- Do not use the automatic servo OFF if the next moving command is relative distance specification (pitch feed). Failure to follow it may cause position shift to occur.
- Do not use the automatic servo OFF in pressing. If used, the pressing force is lost.
- Automatic Servo OFF would not function in the operation with teaching mode of PC software.

15) Vibration suppress No. ····· Unavailable. Do not set up.

4.2.2 Operation in Positioner Mode 1

In Positioner Mode 1, it is available to select 3 types of PIO patterns with the parameters. This PIO Pattern cannot be switched over after the system is finished to be established or during the actuator operation. Choose the optimum pattern beforehand considering the system operation specifications and prepare the cables and sequence design.

[1] PIO Pattern Selection and Main Functions

○ : Valid function

PIO Pattern (Parameter No.25)		0	1	2
Mode		8-point type	Solenoid valve type	16-point type
Major functions	Number of positioning points	8	3	16
	Operation with the Position No. Input	○	×	○
	Position No. direct command operation	×	○	×
	Positioning	○	○	○
	Velocity change during the movement	○	×	○
	Pressing (tension)	○	○	○
	Pitch Feeding (relative moving feed)	○	○	○
	Home return signal input	○	×	×
	Pause	○	○	○
	Brake release signal input	○	○	○
	Zone signal output	○	×	○ Note 1
	Position zone signal output	×	×	○ Note 1

Note 1 The position zone signal output (set in delivery) can be switched to the zone signal with Parameter No.149. This cannot be used together with the zone signal.

[2] Overview of major Functions

Major functions	Description
Number of positioning points	Number of positioning points which can be set in the position table.
Operation with the Position No. Input	Normal operation started by turning the start signal ON after position No. is entered with binary data.
Position No. direct command operation	Operation enabled by turning the signal directly corresponding to a position No. ON
Positioning	Positioning enabled at an arbitrary position by the data set in the position table
Velocity change during the movement	Velocity change enabled by activating another position No. during movement
Pressing (tension)	Operation by an arbitrary pressing (tensile) force set in the position table enabled
Pitch Feeding (relative moving feed)	Pitch feed by an arbitrary moving distance set in the position table enabled
Home return signal input	Input signal exclusively used for home return. Set to ON to start home return
Pause	The operation can be interrupted or continued by setting this signal to ON or OFF, respectively.
Brake release signal input	The brake (option) can only be released while the input is set to ON.
Zone signal output	The output signal is set to ON while the actuator is entered within the zone defined by the coordinate values set as parameters.
Position zone signal output	This is a function that is included to the indicated position number, and its zone range is to be set in the position table, and is valid when that position is indicated and is invalid when in other position command. The output signal is set to ON while the actuator is entered within the zone defined by the coordinate values set in the position table.

[3] Power Supply and Emergency Stop Release (CP, MP, EMG, PEND)
..... [Refer to 3.1.3 Circuit Diagram]

1) Supply the control power (CP, CP_GND), first.
2) Secondly, turn ON the motor power source (MP, MP_GND) and the emergency stop signal EMG at the same time. Do not attempt to turn ON the emergency stop signal EMG prior to the motor power source.
   The controllers get into the servo-on status by the emergency stop signal EMG being ON. For Pattern 1 and 3, the positioning complete signal PEND turns ON at the same time. Also for an actuator equipped with a brake, the brake is released by the servo being turned ON.
3) If the emergency stop signal EMG turns OFF, the servo also turns OFF. Have the motor power (MP, MP_GND) cut off at the same time. Do not attempt to cut off the motor power (MP, MP_GND) prior to the emergency stop signal EMG being turned OFF.
   By turning the servo OFF, the positioning complete signal PEND also turns OFF. For an actuator equipped with a brake, the brake gets to the operating condition.

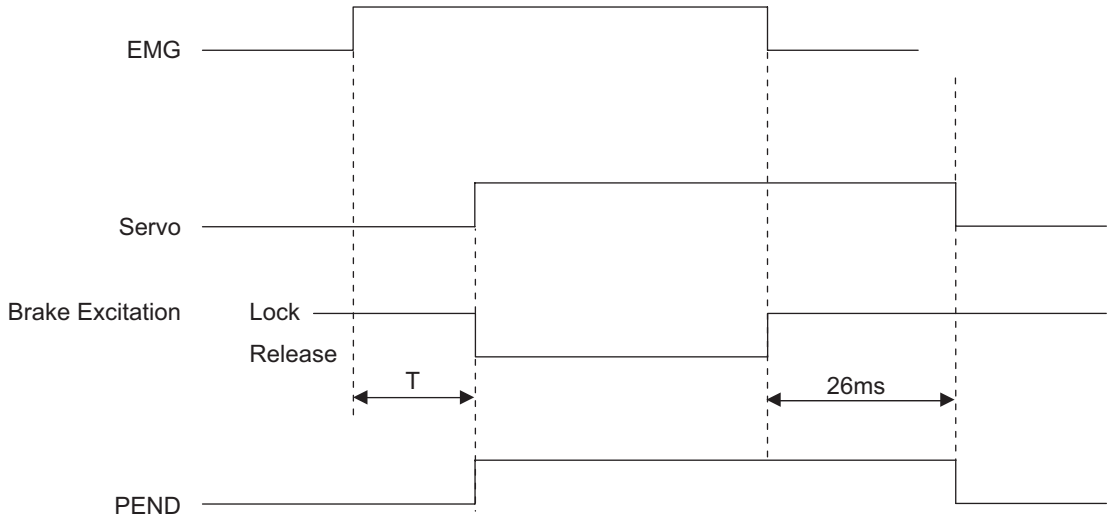

T (before detecting excitation) = SON signal identification (6ms) + Excitation detection time (T1 + T2) × Number of retry (10 times Max.) + Servo ON delay time (T3)
T (after detecting excitation) = SON signal identification (6ms) + Servo ON delay time (T3)

T1 : Parameter No.30 It differs depending on the setting of excitation detection type.
Set Value = 0 → 160ms
Set Value = 1, 2 → 220ms
T2 : Parameter No.29 Setting of excitation phase signal detection time
It is set to 10ms in the initial setting.
T3 : Fixed to 20ms

(Note) • Excitation detection operation of the motor is conducted at the first servo-on after the power is turned ON.
• PEND would not turn ON if the pause signal *STP is OFF.

[4] Brake release BK ····· [Refer to 3.1.3 Circuit Diagram]

This is a signal to compulsorily release the brake of the actuator equipped with a brake.
The brake in the actuator is a non-excitation operation type electromagnetic brake. In a normal operation, it automatically releases the brake with the servo ON and gets to the brake operating status with the servo OFF.
Releasing the brake may be required to move the slider and/or the rod by hand in case of installation of the actuator in the machine or direct teach*1. In such cases, turn this signal ON.
The brake can be released while signal is turned ON.

*1 Direct teaching : This operation is intended to get coordinate values to the position by moving the slider and/or the rod by hand.

⚠ Warning:
(1) Take sufficient care to release the brake. Inappropriate brake release may cause people to be injured and/or the actuator, the work and/or the machine to be damaged.
(2) After the brake is released, always make the brake applied again. Any operation with the brake remaining released is extremely dangerous. The slider or rod may drop to cause people to be injured and/or the actuator, the work and/or the machine to be damaged.
(3) Make certain that this signal is turned OFF (brake is activated) when the power is supplied to the controller. Leaving the power ON may cause a drop of the slider or rod, results in an injury or damage of the actuator unit, work piece or devices.

[5] Time Constant for Control Signal Input

For the input signal for control of this controller, it is set to 6ms of input time constant to prevent an error operation due to chattering or noise from the next page and later.
Therefore, input each input signal for 6ms or more (Note) continuously. The signal cannot be identified if it is less than 6ms.

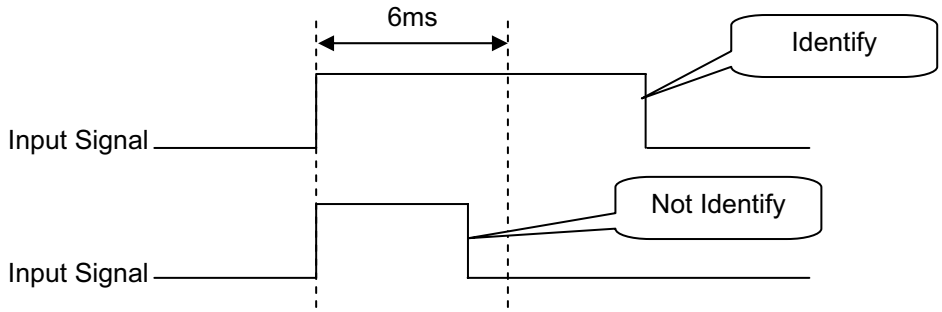

[6] Operation Ready and Auxiliary Signals

(1) Home Return (HOME, HEND, PEND)

PIO signal	Input	Output	
	HOME	HEND	PEND
Pattern 0	○	○	○
Pattern 1	× (Note1)	×	×
Pattern 2	× (Note1)	○	○

○ : Available, ×: Unavailable

(Note 1) For Patterns 1 and 2, a home-return operation with HOME Signal cannot be performed.
- Refer to 4.2.2 [8] Direct Position Specification (3-point <Solenoid valve> type) = PIO Pattern 1 for how to home return for Pattern 1
- Refer to 4.2.2 [7] Operation with the Position No. Input = Operations of PIO Patterns 0 and 2 for how to home return for Pattern 2

The HOME signal is intended for automatic home return. The HOME signal is caught at the rising edge (ON edge) to start the home return. At completion of the home return, home return completion signal HEND is turned ON. The home-return complete signal HEND is kept ON unless the memory of origin point is lost for a reason such as alarm. During the home-return operation, the positioning complete signal PEND is OFF.

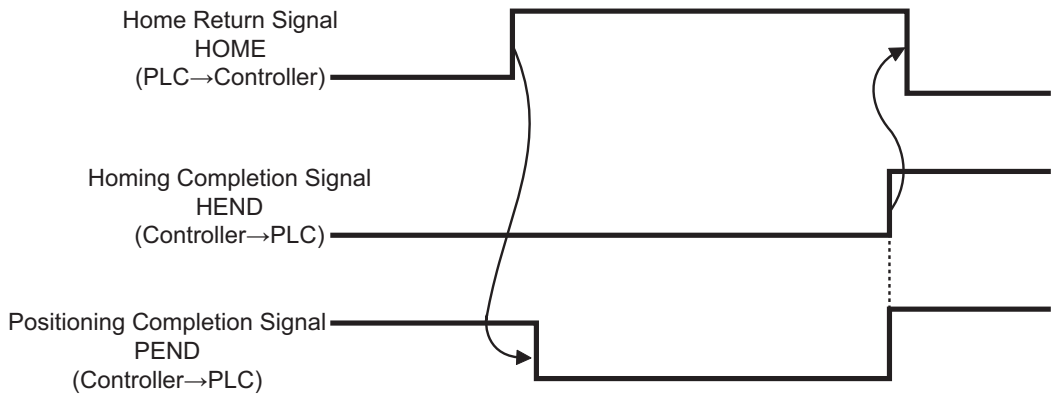

[Operation of Actuator]

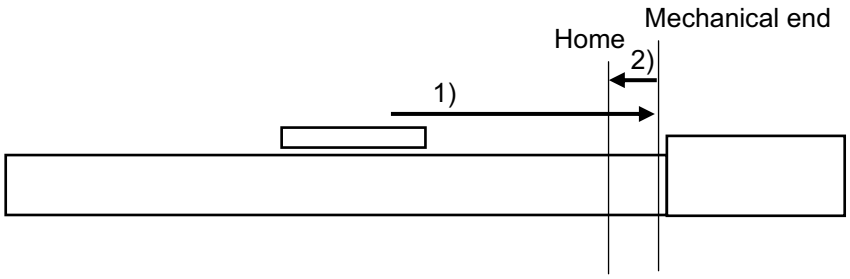

1) With the HOME signal being ON, the actuator moves toward the mechanical end at the home return speed. The movement speed is 20mm/s.
2) The actuator is turned at the mechanical end and stopped at the home position. The moving distance is the value set by Parameter No.22 “Home return offset level”.

⚠ Caution: In the home reverse specification, the actuator moves in the reverse direction. Make sure to refer to Chapter 6, 6.3.1 [2] (15) when a change to Parameter No.22 “Home return offset level” is required.

(2) Zone Signal and Position Zone Signal (ZONE1, PZONE)

Model name	PIO signal	Output	
		ZONE1	PZONE
ERC3 Main Body	Pattern 0	○	×
	Pattern 1	×	×
	Pattern 2	○ (Note 1)	○ (Note 1)

○ : Available, ×: Unavailable

Note 1 ZONE1 and PZONE cannot be used both at the same time. The setting at the delivery is set to the position zone signal output. It can be switched to the zone signal with Parameter No.149. Select the most appropriate one considering the purpose of use.

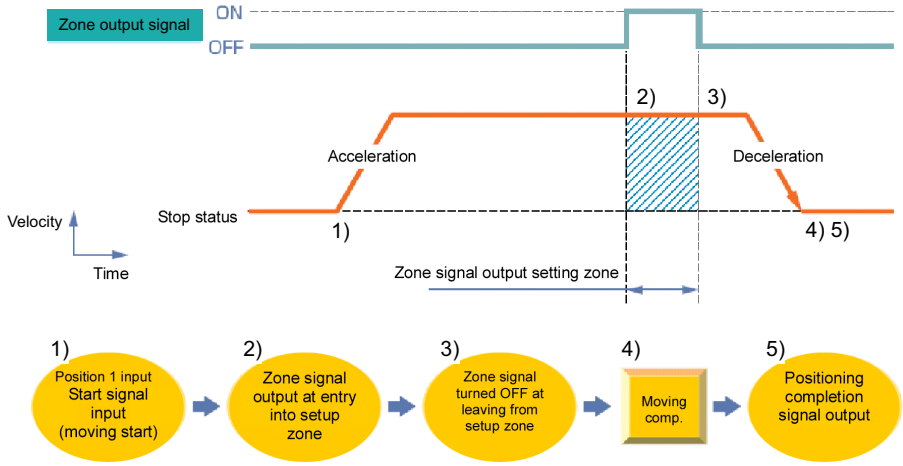

The relevant signal can be turned ON while the actuator passes or stops in the zone range in either of the following 2 types:

1) Zone signal ZONE1 ····· The output signal is turned ON at the position set by the proper parameter.
2) Position zone signal PZONE ····· The output signal is turned ON at the position set in the position table.

The feature can play a role as the sensor for judging whether the completion position is good or not at completion of pressing, setting the continuous operation zone in pitch feed or interlocking operations of other units in the setting zone.

I. Zone signal ZONE1

Set the zone range to the relevant parameter.

1) Parameter No.1 : Zone boundary 1+
2) Parameter No.2 : Zone boundary 1-

The zone signal ZONE is kept effective also during the emergency stop unless the memory of the origin is lost due to alarm.

II. Position zone signal PZONE

No.	Position [mm]	Velocity [mm/s]	Accele-ration [G]	Decele-ration [G]	Pressing [%]	Thresh-old [%]	Positioning width [mm]	Zone+ [mm]	Zone- [mm]	Acceleration/ Deceleration mode	Incre-mental	Transported load	Stop mode
0													
1	0.00	250.00	0.20	0.20	0	0	0.10	50.00	30.00	0	0	0	0
2	100.00	250.00	0.20	0.20	0	0	0.10	70.00	60.00	0	0	0	0
3	50.00	250.00	0.20	0.20	50	0	20.00	60.00	65.00	0	0	0	0

Setting of zone range

Zone ranges should be set in the position table.
While the operation corresponding to a position number is executed, the zone range set for the position number is valid. It is kept effective also during the emergency stop unless the actuator is operated or the memory of the origin is lost due to alarm.

III. Setting values and signal output range
The zone output range varies depending on the difference between the value set for the positive side of the zone and that for the negative side.

1) Value set for positive side > value set for negative side: The output signal is set to ON in the range and OFF out of the range.
2) Value set for positive side < value set for negative side: The output signal is set to OFF in the range and ON out of the range.

[Example]

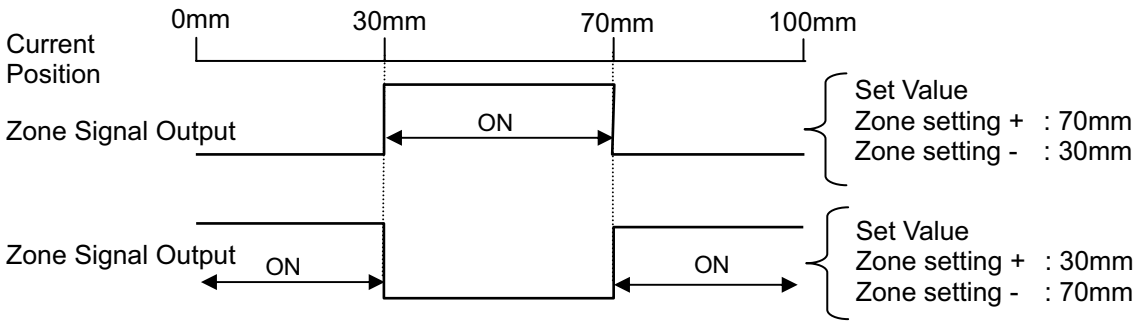

⚠ Caution: (1) Since zone signal becomes effective after the coordinate system is established after the home return is completed, it would not be output just with the power turned ON.
(2) The zone detection range would not turn ON unless the value exceeds that of the minimum resolution (actuator lead length/800).

(3) Alarm, Alarm Reset (*ALM, RES)

Model name	PIO signal	Input	Output
		RES	*ALM
ERC3 Main Body	Pattern 0	×	○
	Pattern 1	○	○
	Pattern 2	×	○

○ : Available, ×: Unavailable

1) Alarm signal *ALM is set to ON in the normal status but turned OFF at the occurrence of an alarm (Note 1) at a level equal to or higher than the operation release level.
2) Turning reset signal RES ON under occurrence of an alarm at the operation release level allows the alarm to be released. The action is taken at the rising edge (ON edge).
There is no reset signal in Patterns 0 and 2. Release with using a teaching tool such as the PC software, or turn OFF the control power supply.

Note 1 For the details and how to deal when an alarm is generated, refer to Chapter 8 Troubleshooting.

⚠ Caution: The alarm reset should be done after the cause of the alarm is confirmed and removed. If alarm reset and restart are repeated many times without removal of the cause, a severe failure such as motor burnout may occur.

[7] Operation with the Position No. Input = Operations of PIO Patterns 0 and 2

Described in this section is how to operate in PIO Pattern 0 and 2 of ERC3 unit. These patterns provide normal controller operation methods in which the ROBO cylinder is operated by turning the start signal ON after a position No. is entered.
Positioning, pitch feeding and pressing operations differ only in the settings in the position table and are the same in how to control the sequence.

(1) Positioning [Basic] (PC1 to PC*, CSTR, PEND, HEND)

Model name	PIO signal	Input		Output	
		PC1 to PC*	CSTR	PEND	HEND
ERC3 Main Body	PIO pattern 0	PC1 to 4	○	○	○
	PIO pattern 2	PC1 to 8	○	○	○

○ : Available, ×: Unavailable

[Caution] If the start signal CSTR is turned ON without performing a home-return operation after the power is turned ON, it automatically performs the home-return operation, and then conducts a positioning operation to the position number indicated at that time.
Also, there is no home-return signal in PIO Pattern 2. For such operations as interlocking, refer to “Home-Return Operation without Home-Return Signal” described later.

■ Sample use

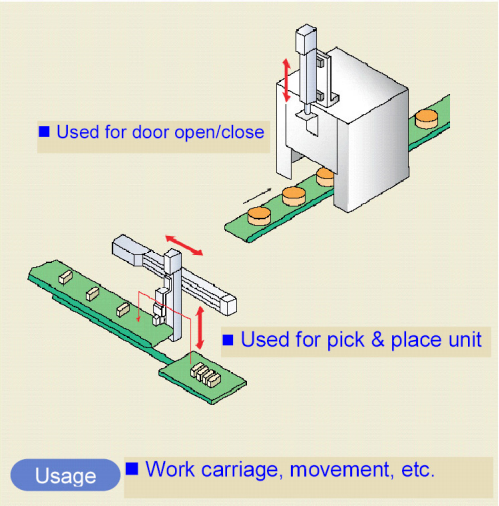

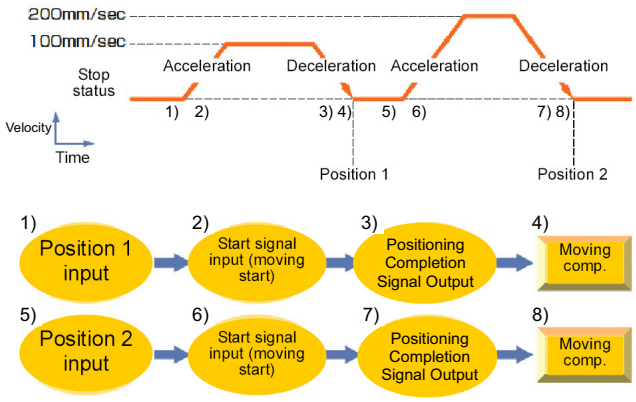

No.	Position [mm]	Velocity [mm/s]	Accele-ration [G]	Decele-ration [G]	Pressing [%]	Thresh-old [%]	Positioning width [mm]	Zone+ [mm]	Zone- [mm]	Acceleration/ Deceleration mode	Incre-mental	Transported load	Stop mode
0													
1	70.00	100.00	0.20	0.20	0	0	0.10	0.00	0.00	0	0	0	0
2	150.00	200.00	0.20	0.20	0	0	0.10	0.00	0.00	0	0	0	0

■ Control method

1) First enter command position No. PC1 to PC* with binary data. Next turn start signal CSTR ON. Then the actuator starts acceleration depending on the data in the specified position table for positioning to the target position.
2) At operation start, positioning complete signal PEND is turned OFF. Always turn the CSTR signal OFF. Unless CSTR Signal is turned OFF, the positioning complete signal PEND would not turn ON at the completion of positioning.
3) The positioning complete signal PEND turns ON when positioning is complete.
4) Positioning complete signal PEND is turned ON if the remaining moving distance enters into the positioning width. PEND signal that is turned ON will remain ON unless the start signal CSTR turns ON again, or the servo is turned OFF. It would not turn OFF even if it goes out of the positioning width. (Note 1)

Note 1 If INP (setting number: 1) is selected in Parameter No.39, PEND becomes INP (In-position) Signal, and will turn OFF when it goes out of the positioning width.

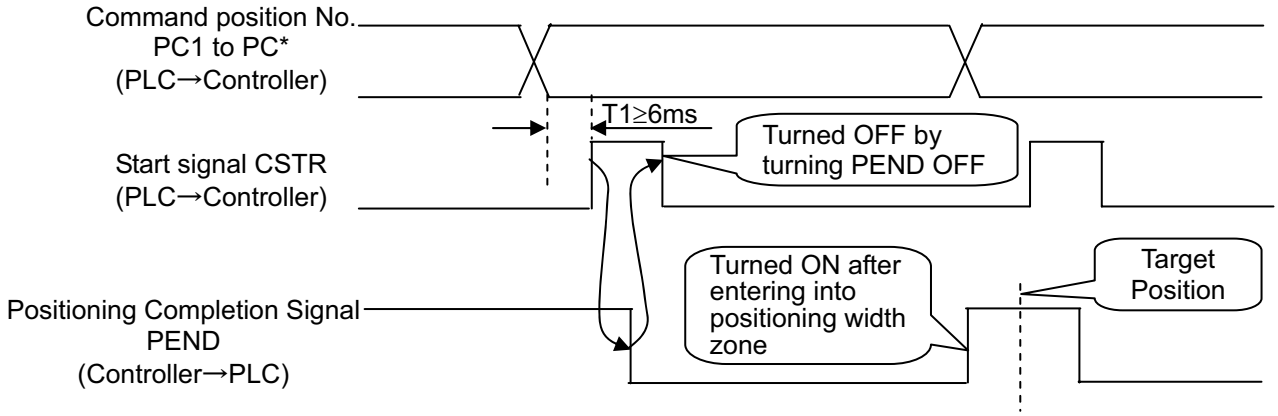

⚠Caution:

(1) Set the period taken from entering position No. to turning CSTR ON to 6ms or larger. In spite of 6ms timer process in the PLC, commands may be input to the controller concurrently to cause positioning to another position. Take the scanning time in the PLC into account to set a period as 2 to 4 times as the scanning time.
(2) At the completion of positioning, positioning complete signal PEND is not turned ON if start signal CSTR remains ON. If this occurs, turn CSTR OFF then PEND is turned ON immediately. Therefore, create the sequence program so that turning PEND OFF makes CSTR turned OFF and the PLC waits for the state in which PEND is turned ON.
(3) If a positioning is performed at the same position as the stop (complete) position number, PEND turns OFF once.
(4) If the setting of the positioning width wide, the actuator continues to move to the target position even after PEND turns ON.

[Important] Home-Return Operation without Home-Return Signal = Home-Return for Pattern 2
If a positioning operation is performed by the indicated position number without having a home-return operation, the actuator automatically performs a home-return operation, and then starts positioning operation by the indicated position number.
There is no home-return command in Pattern 2. Have a home return in this way.

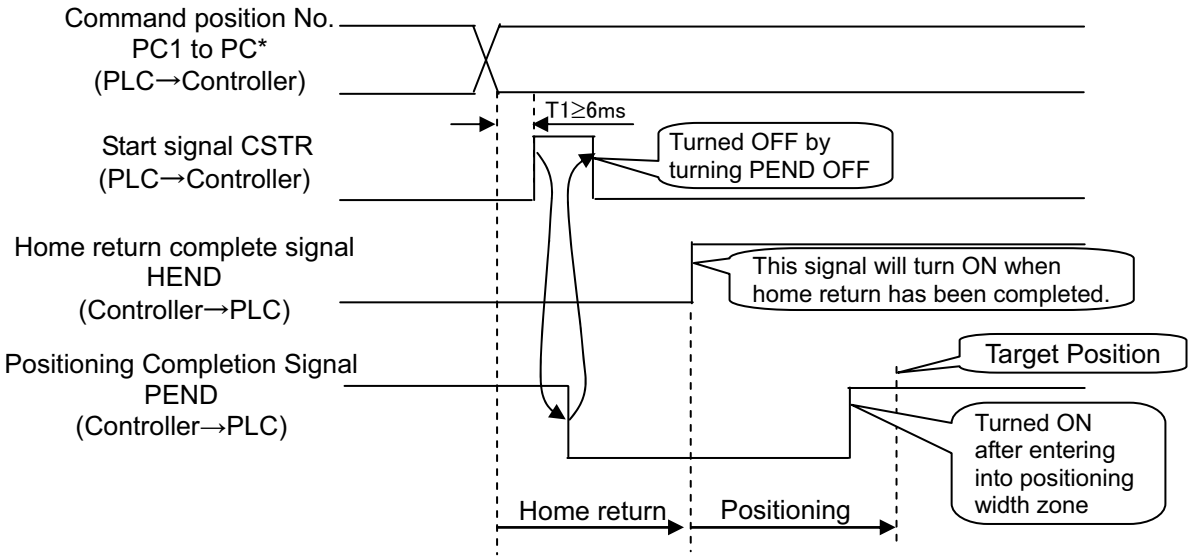

If there is a problem in this operation, have an interlocking to the start signal by the home-return complete signal HEND since there is the home-return signal HOME in PIO Pattern 1.
There is no home-return signal in PIO Pattern 2. Therefore, it is necessary to set 0.00mm to one of the position numbers as a position for positioning, and perform positioning to that position. The actuator performs positioning to the home position and the home-return complete signal HEND turns ON. Interlock the setting so positioning cannot be conducted at other positions by the home-return complete signal HEND.

■ Binary data ○ : ON ● : OFF

Command position No.	PC8	PC4	PC2	PC1
0	●	●	●	●
1	●	●	●	○
2	●	●	○	●
3	●	●	○	○
4	●	○	●	●
5	●	○	●	○
6	●	○	○	●
7	●	○	○	○
8	○	●	●	●
9	○	●	●	○
10	○	●	○	●
11	○	●	○	○
12	○	○	●	●
13	○	○	●	○
14	○	○	○	●
15	○	○	○	○

(2) Speed change during the movement

■ Sample use

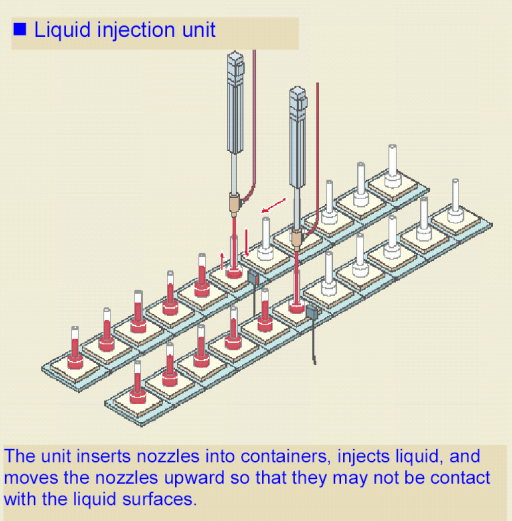

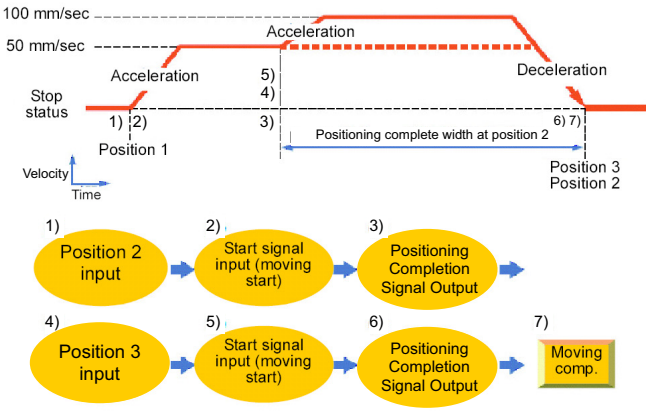

No.	Position [mm]	Velocity [mm/s]	Accele-ration [G]	Decele-ration [G]	Pressing [%]	Thresh-old [%]	Positioning width [mm]	Zone+ [mm]	Zone- [mm]	Acceleration/ Deceleration mode	Incre-mental	Transported load	Stop mode
0													
1	150.00	250.00	0.20	0.20	0	0	0.10	0.00	0.00	0	0	0	0
2	0.00	50.00	0.20	0.20	0	0	100.00	0.00	0.00	0	0	0	0
3	0.00	100.00	0.20	0.20	0	0	0.10	0.00	5.00	0	0	0	0

■ Control method

The speed of the actuator can be changed while it moves. Positions are used by the number of speeds. The method of controlling the operation to each position is the same as that described in (1) Positioning.

The example below describes the case of 2 speeds:

1) In this example, the speed is changed while the actuator moves from the position of 150mm to the position of 0mm. At first, set the positioning to the target position at the first speed in position No.2. In the positioning width, set the distance from the speed change position to the target position. The value is set to 100mm in the example. Thus, for position No.2, positioning complete signal PEND is turned ON at the position before the target position by 100mm.
2) Set the positioning to the target position at the second speed in position No.3.
3) Start position No.2. Then start position No.3 successively when PEND in position No.2 is turned ON. In normal positioning, position data specified later has always a priority over position data specified earlier. Thus, the operation in position No.3 is started on the way of the operation in position No.2.

In this example, the target positions No.2 and 3 are equal with each other. They may not be the same. However, setting the target positions to be equal with each other allows the distance from the speed change position to the target position to be known easily.
To increase in the number of speed change steps, add a position number and operation sequence, set the speed change position in the positioning width and operate the actuator continuously.

(3) Pitch Feeding (relative movement = incremental feed)

■ Sample use

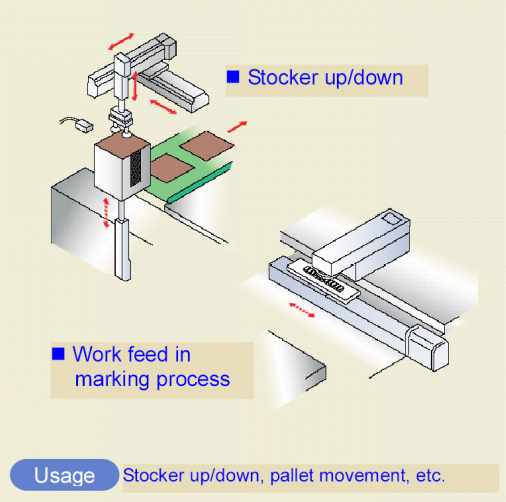

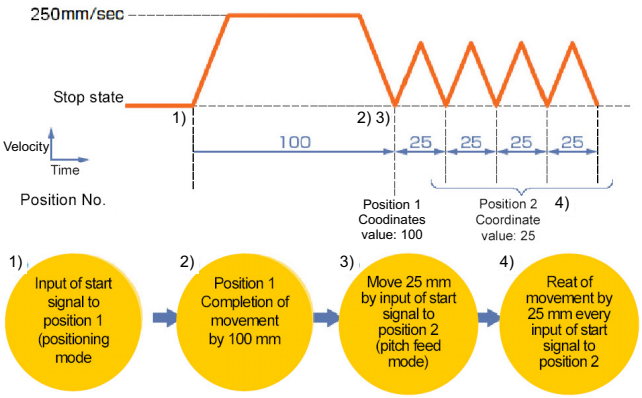

No.	Position [mm]	Velocity [mm/s]	Accele-ration [G]	Decele-ration [G]	Pressing [%]	Thresh-old [%]	Positioning width [mm]	Zone+ [mm]	Zone- [mm]	Acceleration/ Deceleration mode	Incre-mental	Transported load	Stop mode
0													
1	100.00	250.00	0.20	0.20	0	0	0.10	0.00	0.00	0	0	0	0
2	25.00	250.00	0.20	0.20	0	0	0.10	0.00	0.00	0	1	0	0

(Position No.2 sets pitch feed.)

■ Control method

1) The method of controlling pitch feed is the same as that described in (1) Positioning except the setting of the position table. Repeat the positioning of a specific position No.
2) For pitch feed, the position set in the position table indicates the pitch. Set the pitch (relative moving distance = incremental moving distance) in column “Position”.
3) If the operation command is issued, the actuator moves from the current stop position by “Position” in the position table. To perform continuous movement, repeat the operation. Any accumulation error does not occur because the home position (coordinate value 0) is specified as the base point.

⚠ Caution: In the pitch feed, do not perform a command with a pitch smaller than the minimum encoder resolution (lead/encoder pulse number) or that less than positioning accuracy repeatability.
There would be no deviation to occur even with the command because it is an operation command to the same position as the positioning complete condition, but the positioning control cannot be performed properly.

⚠ Caution: (1) If the actuator reaches the software limit corresponding to the stroke end in the pitch feed operation, the actuator stops at the position and positioning complete signal PEND is turned ON.

(2) Note that, in pitch feed just after pressing operation (to be in the pressing state), the start position is not the stop position at the completion of pressing but the coordinate value entered in “Position” of the pressing position data. The movement to the base point is added to the first pitch feed.

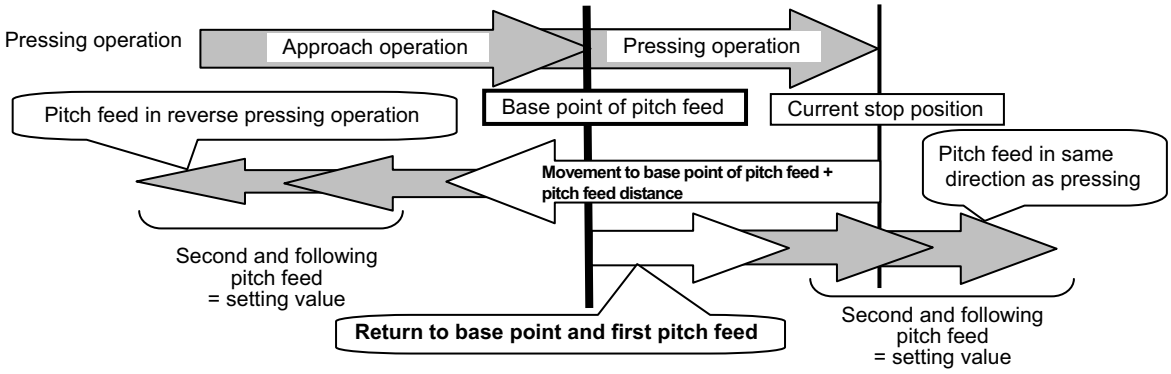

(3) If the position number for pitch feed is started (CSTR ON) during normal positioning, the actuator moves to the position of the coordinate resulting from adding the pitch feed distance to the target coordinate of the positioning. Repeating the start of pitch feed several times allows the pitch feed distance to be added to the target position by the number of repeats. Do not use the pitch feed function in such a way, because the PLC cannot confirm the complete position.

(4) Note that, if pitch feed is started (CSTR ON) repeatedly during pause, the actuator moves continuously by the distance based on the number of starts. Perform an interlocking so the start signal would not turn ON while in pause.

(5) At software limit (stroke end) in pitch feed, the actuator is decelerated to be stopped and positioning complete output PEND is output.

(6) Pressing is enabled by using the pitch feed function. However, do not make control of changing to pitch feed on the way of normal positioning (before PEND turning ON). Pressing is interrupted by using the pitch feed function as soon as start signal CSTR is turned ON. The PLC cannot manage the position of the actuator any more.

(4) Pressing operation

■ Sample use

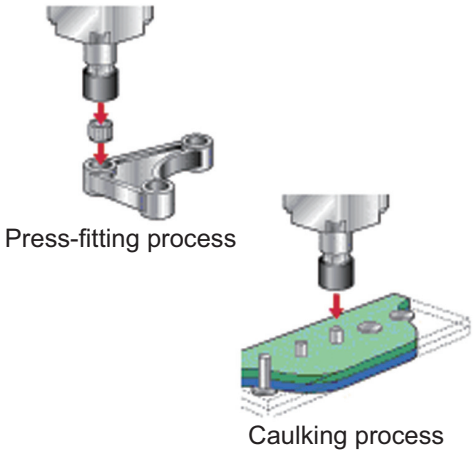

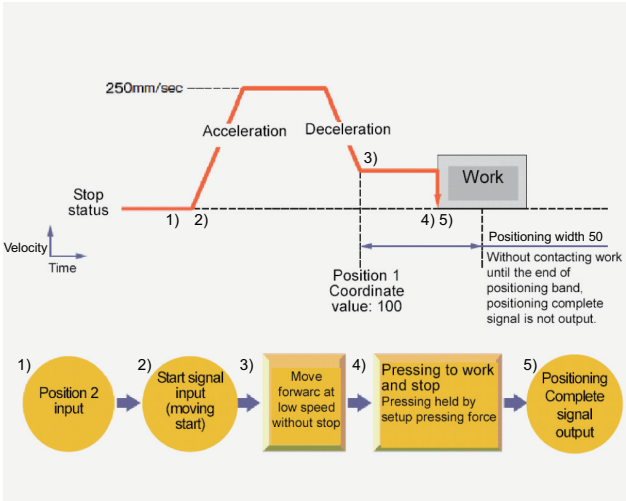

No.	Position [mm]	Velocity [mm/s]	Accele-ration [G]	Decele-ration [G]	Pressing [%]	Thresh-old [%]	Positioning width [mm]	Zone+ [mm]	Zone- [mm]	Acceleration/ Deceleration mode	Incre-mental	Transported load	Stop mode
0													
1	0.00	250.00	0.20	0.20	0	0	0.10	0.00	0.00	0	0	0	0
2	100.00	250.00	0.20	0.20	50	0	50.00	0.00	0.00	0	0	0	0

(Position No.2 sets pressing operation.)

■ Control method

1) The method of controlling the pressing operation is the same as that described in (1) Positioning except the setting of the position table. Any setting of “Pressing” in the position table allows the pressing operation to be done. “Positioning width” is assumed as pressing operation distance.
2) The actuator moves at the setting speed and rating torque to the position of the coordinate set in “Position” in the similar way as normal positioning. The operation is executed with the value set in “Positioning width” for the amount of movement in the pressing operation, and the torque (current limit) set in % in “Pressing” for the pressing operation as the upper limit.
3) The control method is the same as that in [1] Positioning. However, the processing of positioning complete signal PEND is different from that in [1] Positioning.
PEND is output when the shaft is stopped by pressing (pressing complete). If the work is not subject to pressing (miss-pressing), the actuator moves by the value set in “Positioning width” to stop but PEND is not turned ON.

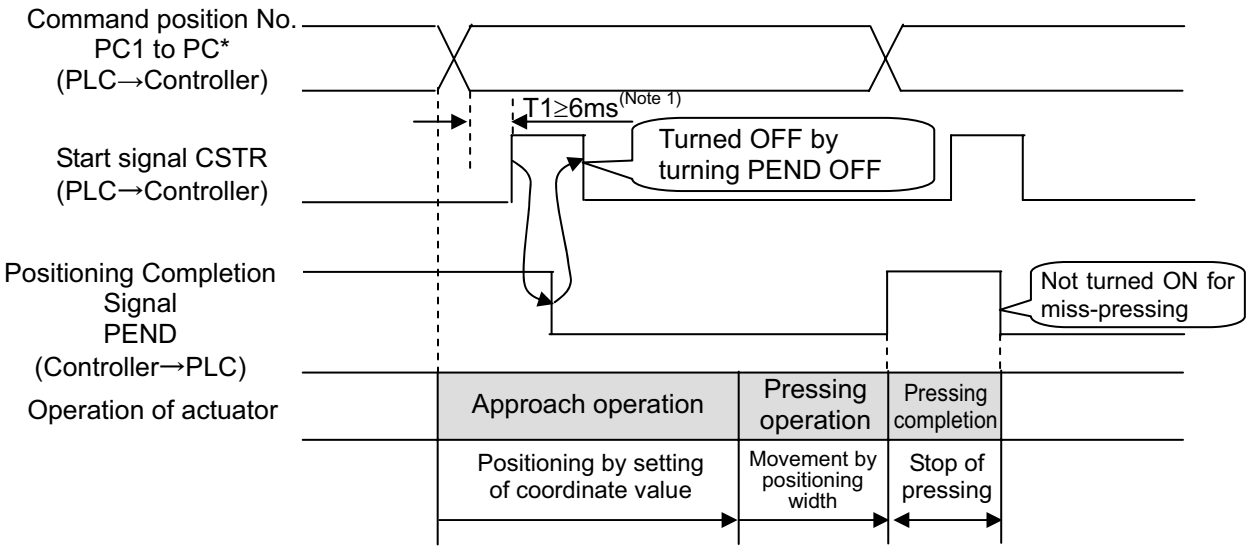

(Note 1) Set the period taken from entering the position number to turning CSTR ON to 6ms or longer. Because 6ms timer process on the PLC is also entered to the controller, positioning at another position may occur. Take the PLC scan time into account.

⚠ Caution: (1) The speed during pressing operation is set in Parameter No.34. The pressing operation speed is 20mm/s. Do not set any value larger than the value in the list.
If the speed setting in the position table is below this set value, pressing is performed with the set speed.

(2) The approach start position of pressing should be located at or before the pressing start position (coordinate 100mm or less in the above example) If not, the moving direction varies depending on the start position to be dangerous.
For example, pressing at coordinate larger than the pressing end position (larger than 150mm) is performed in the direction from the current position to the pressing end position. Note that pressing after positioning to the position of coordinate 100mm does not take place.

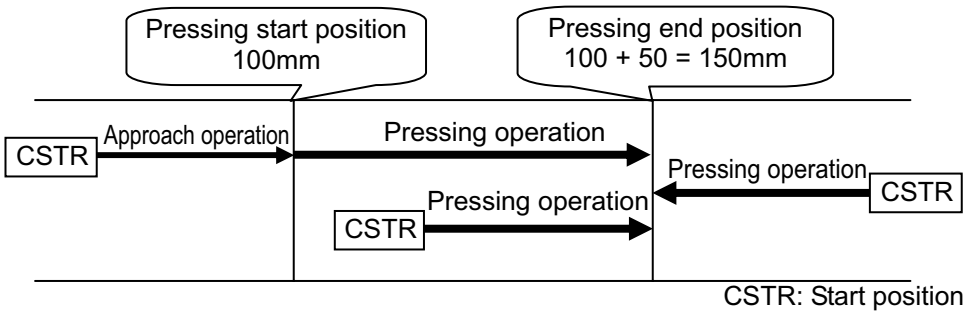

(3) The work is pressed after the pressing is completed. The work may move backward or forward. If the actuator is moved backward before the approach position, alarm code 0DC “Pressing operation range over error” occurs to stop the actuator. In movement of the work in the pressing direction, PEND is turned OFF if the load current becomes lower than the current limit (pressing [%]). Miss-pressing occurs when the actuator moves by the pressing moving distance set in “Positioning width”.

(4) Do not make control of changing to pressing on the way of normal positioning (before PEND turning ON). Depending on the position at which start signal CSTR is turned ON, the pressing is performed improperly. Then the PLC cannot manage the position of the actuator.

(5) If the actuator gets pressed to the work during the approach operation, 0DC “Pressing operation range over error” would be issued.

Judging completion of pressing operation

The operation monitors the torque (current limit value) in percent in “Pressing” of the position table and turns pressing complete signal PEND ON when the load current satisfies the condition shown below during pressing. PEND is turned ON at satisfaction of the condition if the work is not stopped.
(Accumulated time in which current reaches pressing value [%]) – (accumulated time in which current is less than pressing value [%]) ≥ 255ms (Parameter No.6)

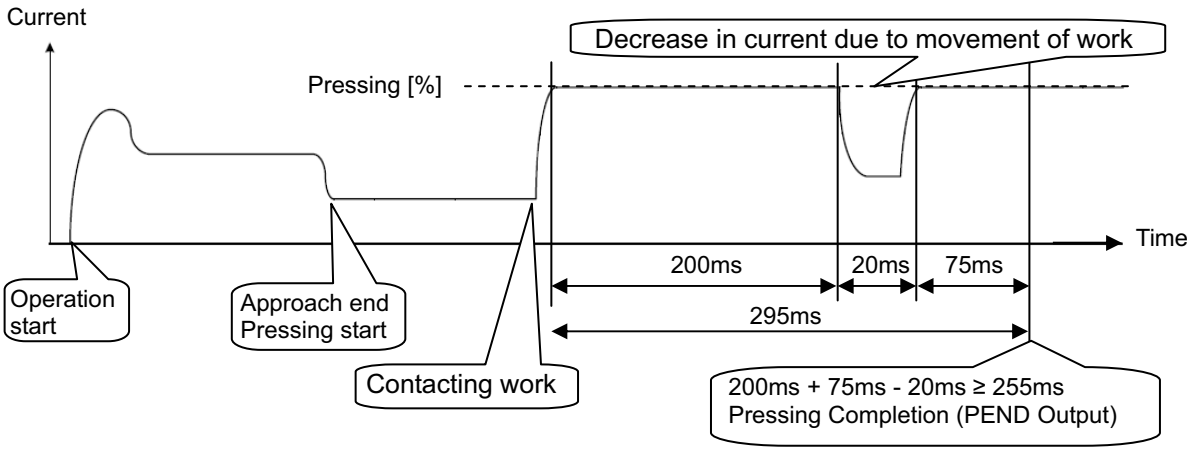

(5) Tension Operation

■ Image diagram

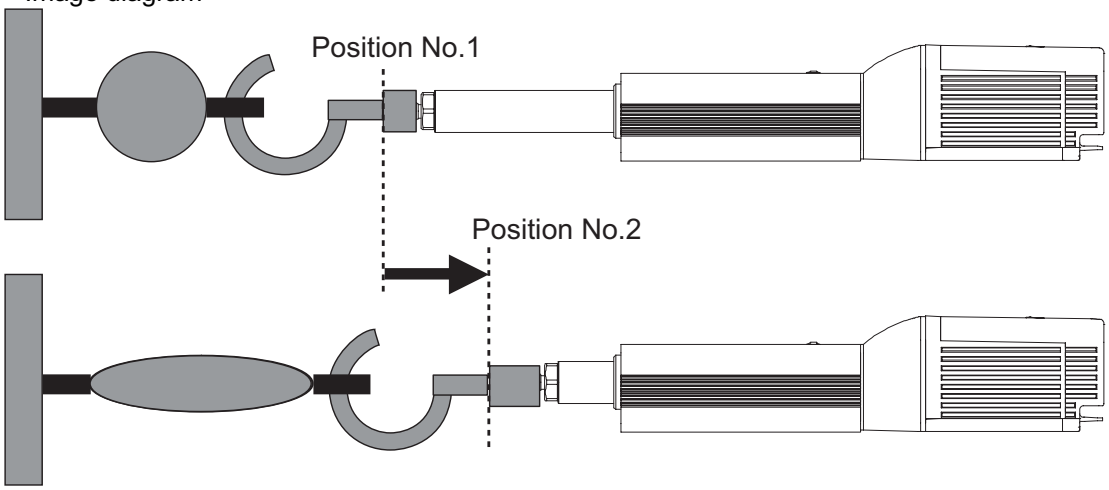

No.	Position [mm]	Velocity [mm/s]	Accele-ration [G]	Decele-ration [G]	Pressing [%]	Thresh-old [%]	Positioning width [mm]	Zone+ [mm]	Zone- [mm]	Acceleration/ Deceleration mode	Incre-mental	Transported load	Stop mode
0													
1	100.00	250.00	0.20	0.20	0	0	0.10	0.00	0.00	0	0	0	0
2	80.00	250.00	0.20	0.20	50	0	–50.00	0.00	0.00	0	0	0	0
3													

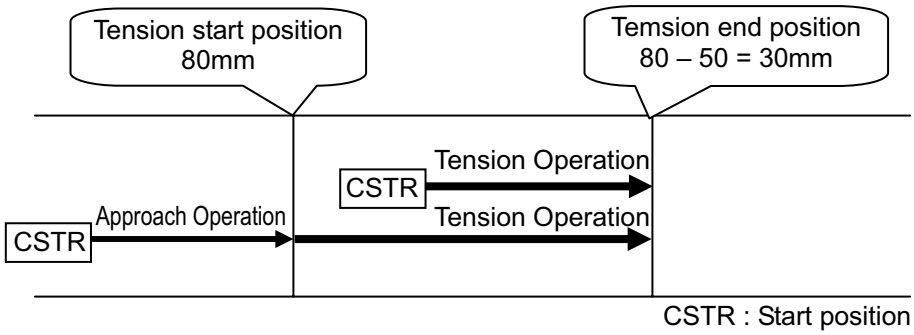

■ Control method

The method of controlling the tension operation is the same as that described in (4) Pressing operation. The control method is explained below by using the sample position table shown above.

1) Position No.2 indicates the settings of tension operation. The settings of “Position” and “Positioning width” show the tension start position and the tension quantity, respectively. Attach – (minus sign) to the tension quantity. Specify the upper limit of the torque required for tension in percent (limited current value) in “Pressing”. The speed, acceleration, and deceleration are the conditions of positioning to the coordinate value (80mm) set in “Position”.
2) Position No.1 indicates the tension start preparation position. Specify a value larger than the coordinate value at which the tension provided by position No.2 ends (80 – 50 = 30mm) in “Position”.
3) First define the positioning in position No.1. Next, the operation in position No.2 moves the actuator to the position of 80mm at the setting speed and rating torque and change to the tension operation. The actuator moves by 50mm in the negative direction in the tension operation. The upper limit of the tensile force is the torque set in percent.
4) In the similar way as pressing, the positioning complete signal is output when the shaft is stopped by tension (pressing complete). If the actuator cannot be stopped during movement within the setting positioning width (miss-pressing), it moves by the setting distance to stop but PEND is not turned ON.

⚠ Caution: (1) The speed during tension operation is set in Parameter No.34. The pressing operation speed is 20mm/s. The speed for pulling operation is same as that for pressing operation. Do not set any value larger than the value in the list.
If the speed setting in the position table is below this set value, pressing is performed with the set speed.

(2) The tension ready position should be the tension start position or forward. If not, the moving direction varies depending on the start position to be dangerous.
The tension operation from a coordinate (less than 30mm = 80 – 50 in the above example) located before the end position (30mm) changes to the pressing operation from the current position to the tension end position. Note that the tension operation after positioning to the position of 80mm does not take place.

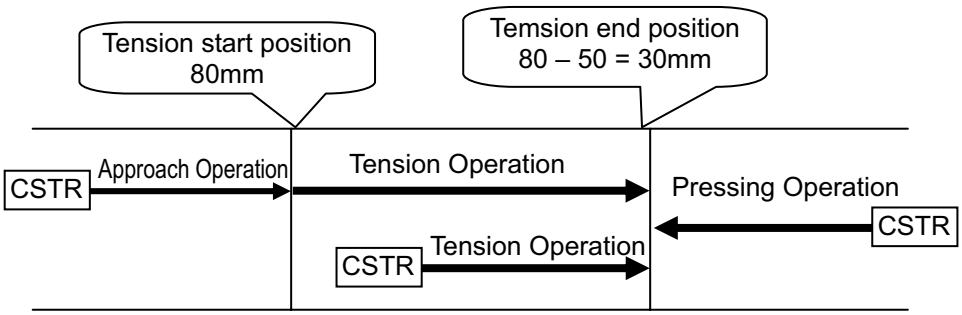

CSTR: Start position

(3) The work is pulled also after completion of the tension. The work is drawn back or pulled further if the work is moved. When the work is drawn back before the approach position, alarm code 0DC “pressing operation range over error” occurs to stop the work. When the work is moved in the tension direction and the load current becomes less than the current limit value (pressing in percent), PEND is turned OFF. The work reaches the tension moving distance set in “Positioning width” to cause miss-pressing.

(4) Do not make control of changing to tension operation on the way of normal positioning (before PEND turning ON). Depending on the position at which start signal CSTR is turned ON, the tension operation is performed improperly. Then the PLC cannot manage the position of the actuator.

(6) Multi-step pressing

■ Image diagram

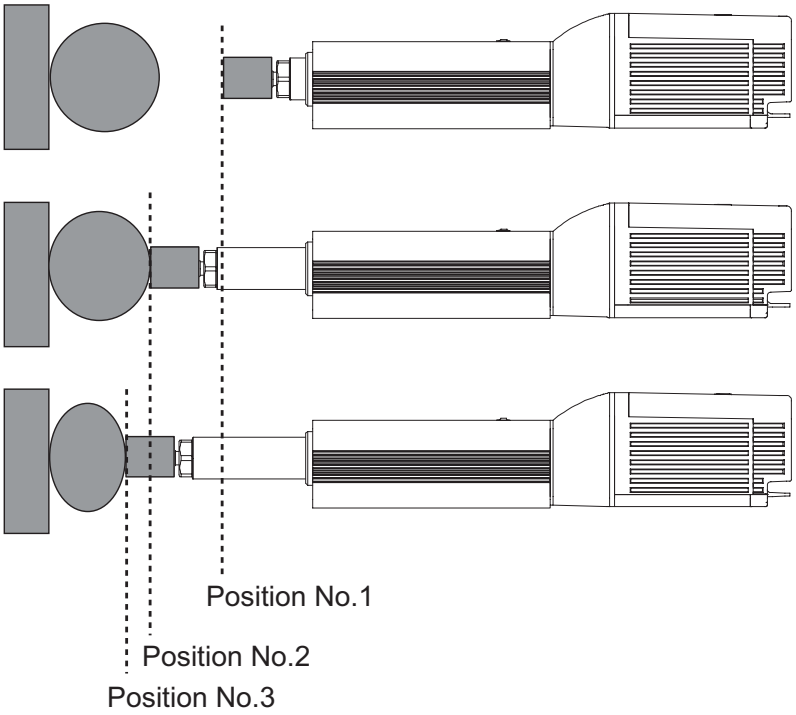

No.	Position [mm]	Velocity [mm/s]	Accele-ration [G]	Decele-ration [G]	Pressing [%]	Thresh-old [%]	Positioning width [mm]	Zone+ [mm]	Zone- [mm]	Acceleration/ Deceleration mode	Incre-mental	Transported load	Stop mode
0													
1	0.00	250.00	0.20	0.20	0	0	0.10	0.00	0.00	0	0	0	0
2	50.00	250.00	0.20	0.20	30	0	20.00	0.00	0.00	0	0	0	0
3	50.00	250.00	0.20	0.20	50	0	20.00	0.00	0.00	0	0	0	0
4													

■ Control method

After pressing, the pressing pressure can only be changed in the pressing state.
The method of controlling multi-step pressing is the same as that described in (4) Pressing operation.

1) Set the weak pressing (30%) in position No.2 and perform the pressing operation.
2) If pressing complete signal PEND is turned ON, start the pressing operation with pressing pressure (50%) greater than the first pressure set in position No.3.
   The position data in position No.3 should be the same as that in position No.2 except the setting in “Pressing”.
3) To add a pressing step with another pressing pressure, add a sequence consisting of a position number and a pressing operation.

(7) Pause and Operation Interruption (*STP, PEND)

Model name	PIO signal	Input	Output
		*STP	PEND
ERC3 Main Body	Pattern 0 and 2	○	○

○: Available, ×: Unavailable

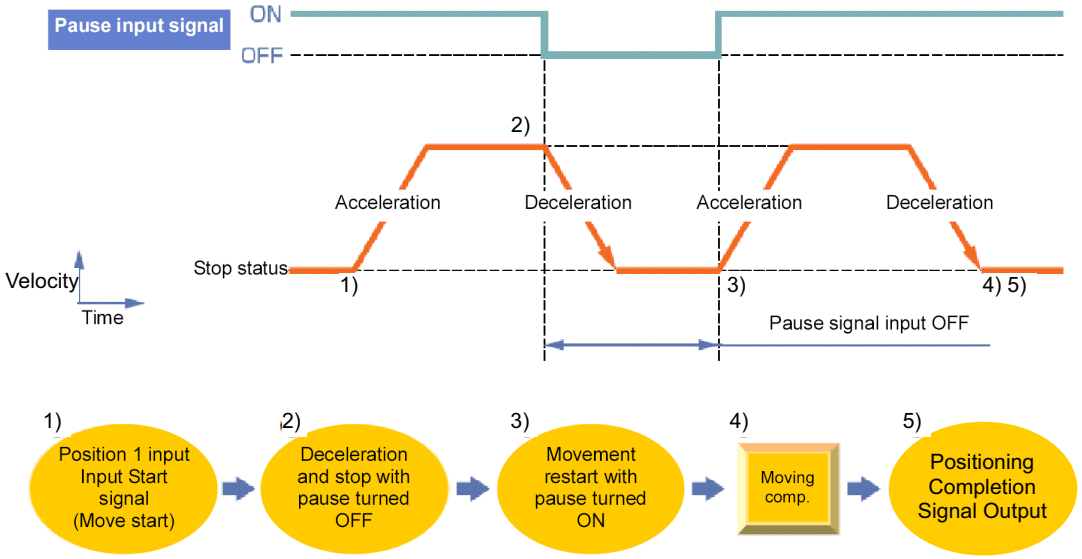

■ Control method

Pause is possible during movement. The pause signal is an input signal always set to ON. So, it is normally used to remain ON. Use this as an interlock in such a case interference gets into the moving direction while the actuator is operating.

1) If pause signal *STP is turned off during operation of the actuator, the actuator is decelerated to a stop. The deceleration is defined by the value set in the position table.
2) The positioning complete signal PEND would not turn ON while in pause.
3) If pause signal *STP is returned to ON, the actuator continues the remaining movement. The acceleration is the value set in the position table.

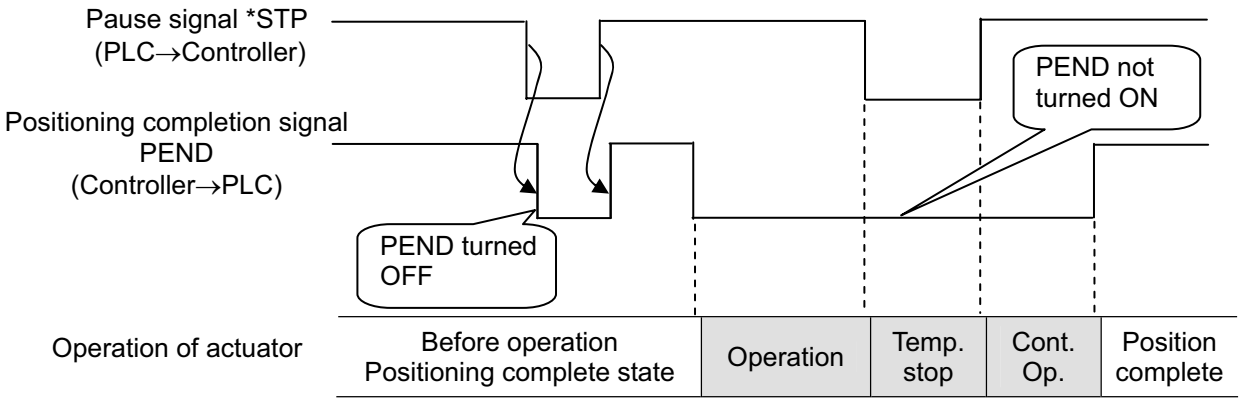

⚠ Caution: Turning *STP OFF with the actuator being in the positioning complete state causes PEND to be turned OFF. Note that this situation may not occur when a sequence program is created.

[8] Direct Position Specification (3-point <Solenoid valve> type) = PIO Pattern 1

The start signal is provided for every position number. Only turning ON the relevant input signal according to the table shown below allows the operation based on the data in the target position number to be performed. The operation mode is called the solenoid valve mode because solenoid valves can directly drive air cylinders.
Also, the complete position number is output for each position number once positioning is complete.
Positioning, pressing, and pitch feed are possible. Their control methods are the same as those of other patterns.

(1) Positioning [Basic] (ST0 to ST2, PE0 to PE2)

Model name	Position No.	Input	Output
ERC3 Main Body	0	ST0	PE0
	1	ST1	PE1
	2	ST2	PE2

[Caution]
- Speed change is not allowed during movement.
- There is no home-return signal. The actuator automatically performs the home-return operation with the first start signal ST* after the power is turned ON, and then performs an operation regarding the data in the indicated position number. For the details refer to “Home-Return Operation” described later.

■ Sample use

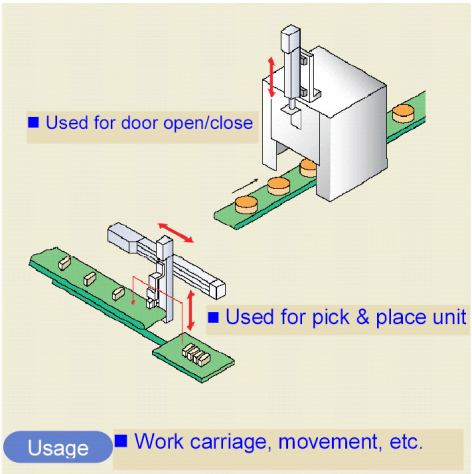

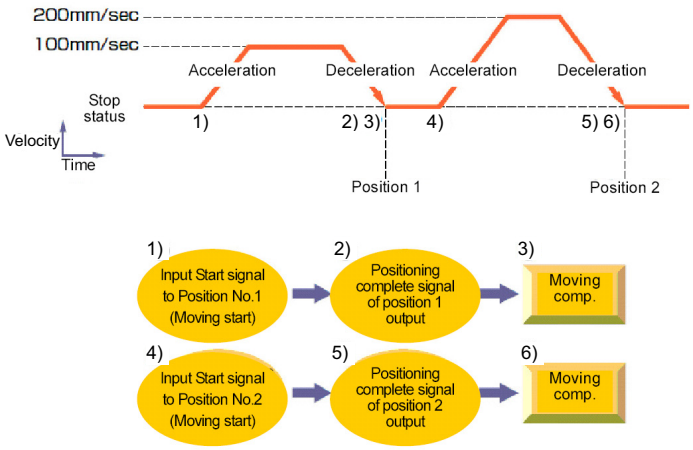

No.	Position [mm]	Velocity [mm/s]	Accele-ration [G]	Decele-ration [G]	Pressing [%]	Thresh-old [%]	Positioning width [mm]	Zone+ [mm]	Zone- [mm]	Acceleration/ Deceleration mode	Incre-mental	Transported load	Stop mode
0	0.00	100.00	0.20	0.20	0	0	0.10	0.00	0.00	0	0	0	0
1	70.00	100.00	0.20	0.20	0	0	0.10	0.00	0.00	0	0	0	0
2	150.00	200.00	0.20	0.20	0	0	0.10	0.00	0.00	0	0	0	0

■ Control method

1) When start signal ST* is turned ON, the actuator starts acceleration based on the data in the specified position table for positioning to the target position.
2) Current Position No. PE* of the commanded position turns ON once the positioning is complete.
3) Once the current position No. PE* signal turns ON, turn OFF ST* Signal.
4) Current Position No. PE* turns ON if the remaining movement amount is in the range of the positioning width. PE* signal that is turned ON will remain ON unless the start signal ST* turns ON again, or the servo is turned OFF. It would not turn OFF even if it goes out of the positioning width. (Note 1)

Note 1 If INP (setting number: 1) is selected in Parameter No.39, PE* becomes INP (In-position) Signal, and will turn OFF when it goes out of the positioning width.
(Note) It can be switched over with Parameter No.39.

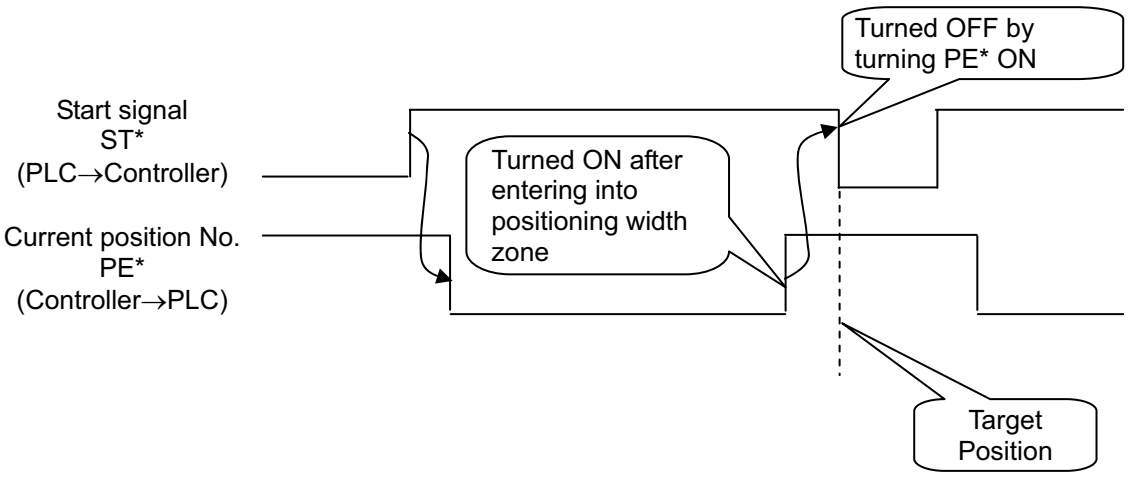

⚠ Caution: (1) If the ST* signal is turned ON for the position after completion of positioning, both the PE* signal remain ON (except the pitch feed operation).
(2) PE* Signal turns ON when the actuator gets into the positioning width. Accordingly, they may be turned ON under operation of the actuator if a large positioning width is set.
(3) Interlock should be taken so that two or more ST* signals are set to ON simultaneously.
1) Entering the ST* signal of another position during positioning is invalid. If the ST* signal of another position is turned ON during positioning, the operation is terminated after the completion of the positioning being operated.
2) Entering the ST* signal of another position with the ST* signal of the current position remaining ON after the completion of positioning allows the positioning to the other position to be executed.
(4) If Parameter No.27 “Move command type” is set to “0” (factory setting), turning ST* OFF during positioning caused the operation to be interrupted.

[Important] Home return
In the first positioning operation after the power is supplied, home-return operation is automatically performed, and then positioning operation with the data of the indicated position number starts. There is no home-return command in Pattern 1. Have a home return in this way.

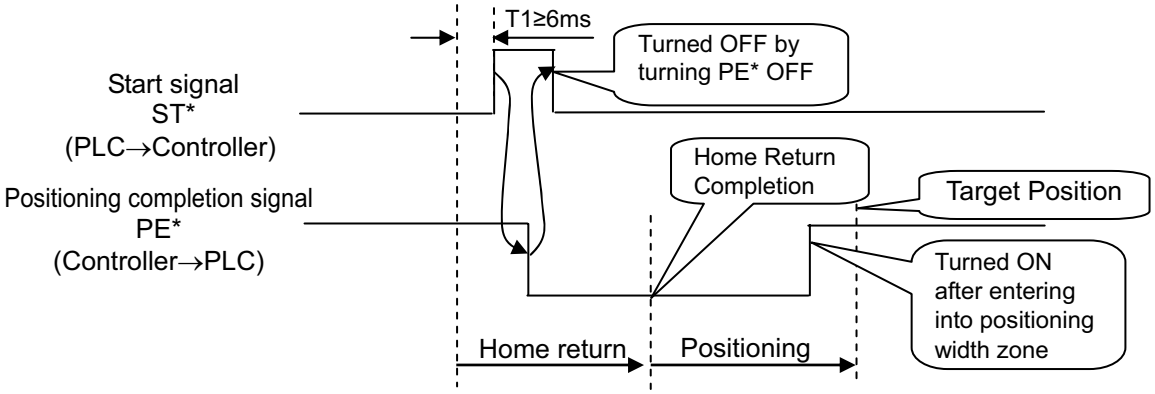

If there is a problem in this operation, set 0.00mm to one of the position numbers as a position for positioning, and perform positioning to that position. The actuator performs positioning to the home position and PE* of the indicated position turns ON. Interlock the setting so positioning cannot be conducted at other positions by this PE* Signal.

(2) Pitch Feeding (relative movement = incremental feed)

■ Sample use

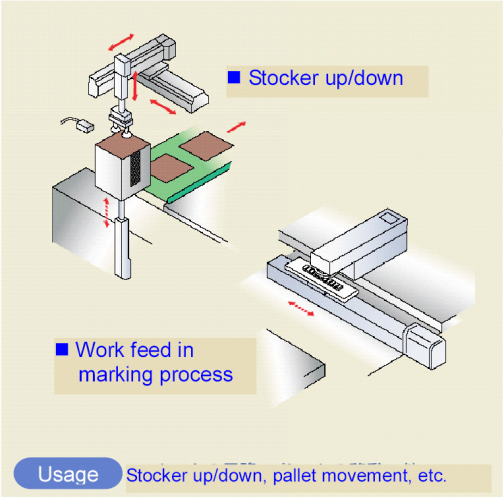

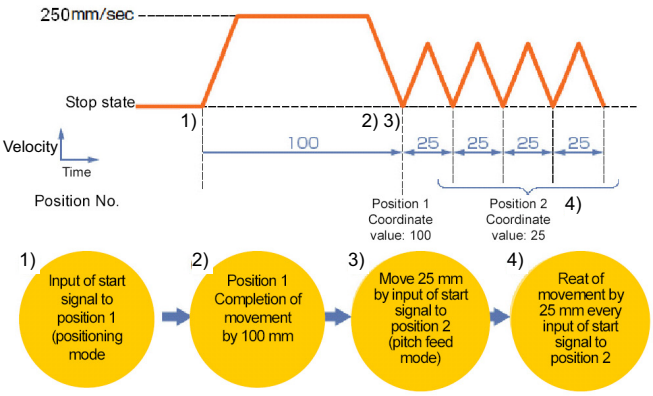

No.	Position [mm]	Velocity [mm/s]	Accele-ration [G]	Decele-ration [G]	Pressing [%]	Thresh-old [%]	Positioning width [mm]	Zone+ [mm]	Zone- [mm]	Acceleration/ Deceleration mode	Incre-mental	Transported load	Stop mode
0													
1	100.00	250.00	0.20	0.20	0	0	0.10	0.00	0.00	0	0	0	0
2	25.00	250.00	0.20	0.20	0	0	0.10	0.00	0.00	0	1	0	0

(Position No.2 sets pitch feed.)

■ Control method

1) The method of controlling pitch feed is the same as that described in [1] Positioning except the setting of the position table. Repeat the positioning of a specific position No.
2) For pitch feed, the position set in the position table indicates the pitch. Set the pitch (relative moving distance = incremental moving distance) in column “Position”.
3) If the operation command is issued, the actuator moves from the current stop position by “Position” in the position table. To perform continuous movement, repeat the operation. Any accumulation error does not occur because the home position (coordinate value 0) is specified as the base point.

⚠ Caution:

(1) If ST* Signal is turned ON at the same position number to repeat pitch feeding after positioning is complete, PE* Signal turns OFF at the operation start like the positioning in (1), and then turns back ON once the positioning is complete.

(2) If the actuator reaches the software limit (stroke end) in pitch feed, the actuator is decelerated to be stopped and current position No. PE* is turned ON at the stop position.

(3) PE* Signal turns ON when the actuator gets into the positioning width. Accordingly, they may be turned ON under operation of the actuator if a large positioning width is set.

(4) SInterlock should be taken so that two or more ST* signals are set to ON simultaneously.

1) Entering the ST* signal of another position during positioning is invalid. If the ST* signal of another position is turned ON during positioning, the operation is terminated after the completion of the positioning being operated.

2) Entering the ST* signal of another position with the ST* signal of the current position remaining ON after the completion of positioning allows the positioning to the other position to be executed.

(5) If Parameter No.27 “Move command type” is set to “0” (factory setting), turning ST* OFF during positioning caused the operation to be interrupted.

(6) Note that, when Parameter No.27 “Move command type” is set to “1”, starting (ST* ON) pitch feed repeatedly during pause causes the actuator to be moved successively by the number of starts. If this situation is supposed, cancel the remaining moving distance by turning reset signal RES ON in the pause state or take interlock so that start signals are not turned on during pause.

(7) The pressing operation is enabled by using the pitch feed function.

(8) In the pitch feed, do not perform a command with a pitch smaller than the minimum encoder resolution (lead / encoder pulse number) or that less than positioning accuracy repeatability.
There would be no deviation to occur even with the command because it is an operation command to the same position as the positioning complete condition, but the positioning control cannot be performed properly.

(3) Pressing operation

■ Sample use

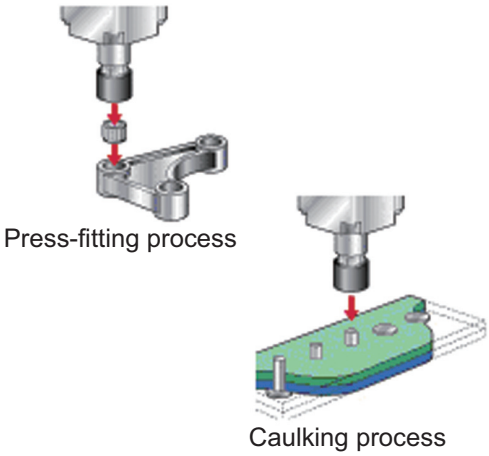

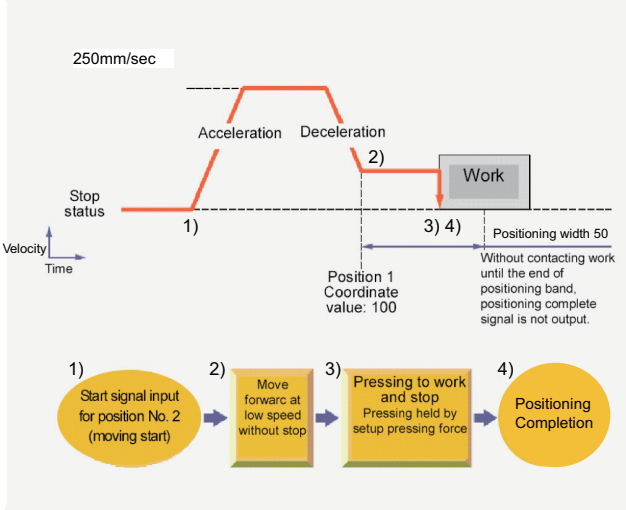

No.	Position [mm]	Velocity [mm/s]	Accele-ration [G]	Decele-ration [G]	Pressing [%]	Thresh-old [%]	Positioning width [mm]	Zone+ [mm]	Zone- [mm]	Acceleration/ Deceleration mode	Incre-mental	Transported load	Stop mode
0													
1	0.00	250.00	0.20	0.20	0	0	0.10	0.00	0.00	0	0	0	0
2	100.00	250.00	0.20	0.20	50	0	50.00	0.00	0.00	0	0	0	0

(Position No.2 sets pressing operation.)

■ Control method

1) The method of controlling the pressing operation is the same as that described in (1) Positioning except the setting of the position table. Any setting of “Pressing” in the position table allows the pressing operation to be done. “Positioning width” is assumed as pressing operation distance.

2) The actuator moves at the setting speed and rating torque to the position of the coordinate set in “Position” in the similar way as normal positioning. The operation is executed with the value set in “Positioning width” for the amount of movement in the pressing operation, and the torque (current limit) set in % in “Pressing” for the pressing operation as the upper limit.

③ Current Position No. PE* is output when the axis stops by pressing operation (pressing complete). Also, even when not pressing a work piece (pressing error), a movement is made for the setting of “positioning width”, and then turns ON.

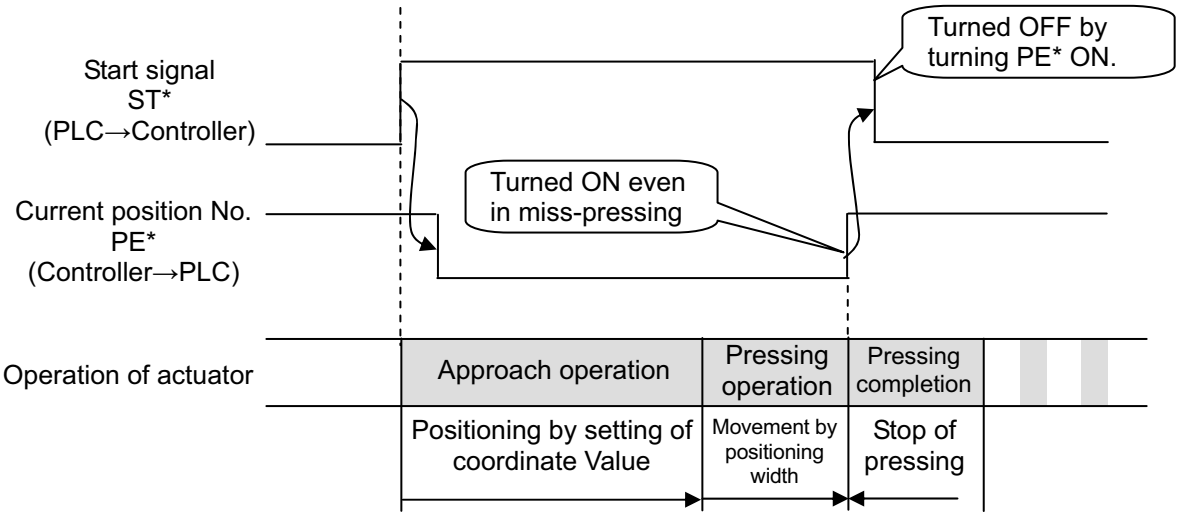

⚠ Caution: (1) The speed during pressing operation is set in Parameter No.34. The pressing operation speed is 20mm/s. Do not set any value larger than the value in the list. If the speed setting in the position table is below this set value, pressing is performed with the set speed.

(2) The approach start position of pressing should be located at or before the pressing start position (coordinate 100mm or less in the above example) If not, the moving direction varies depending on the start position to be dangerous.
For example, pressing at coordinate larger than the pressing end position (larger than 150mm) is performed in the direction from the current position to the pressing end position. It would not proceed to the pressing operation at 150mm point after positioning at 100mm point.

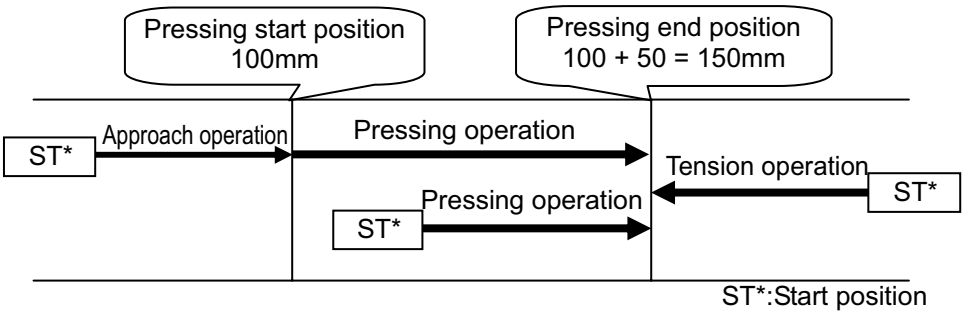

(3) The work is pressed after the pressing is completed. The work may moves backward or forward. If the actuator is moved backward before the approach position, alarm code 0DC “Pressing operation range over error” occurs to stop the actuator. In movement of the work in the pressing direction, PE* is turned OFF if the load current becomes lower than the current limit (pressing [%]). Miss-pressing occurs when the actuator moves by the pressing moving distance set in “Positioning width”.

(4) If the actuator gets pressed to the work during the approach operation, 0DC “Pressing operation range over error” would be issued.

Judging completion of pressing operation

PIO converter monitors the torque (current limiting value) set in % in “Pressing” in the position table, and turns ON the pressing complete signal PE* when the load current reaches the following condition. PE* is turned ON at satisfaction of the condition if the work is not stopped.

Accumulated time in which current reaches pressing value [%]) – (accumulated time in which current is less than pressing value [%]) ≥ 255ms (Parameter No.6)

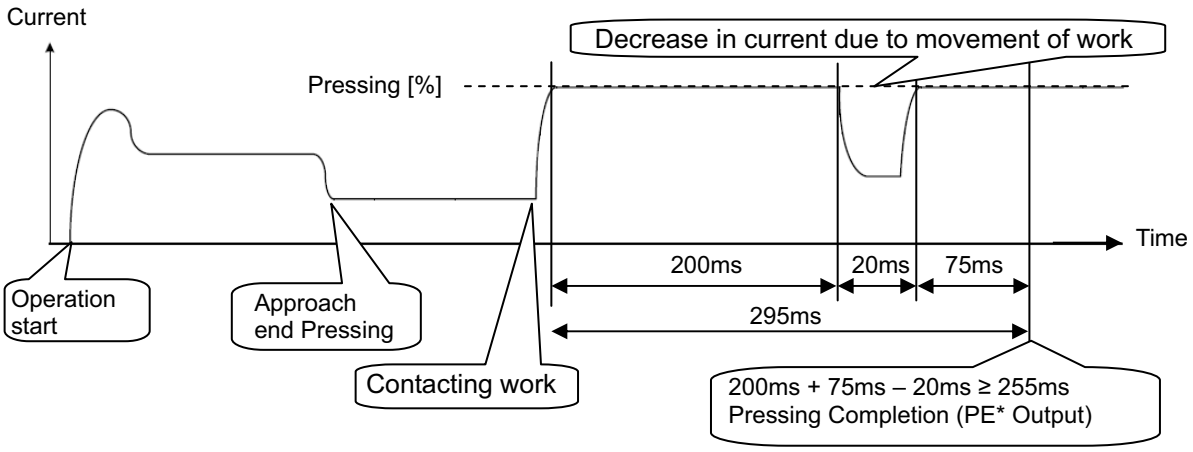

(4) Tension Operation

■ Image diagram

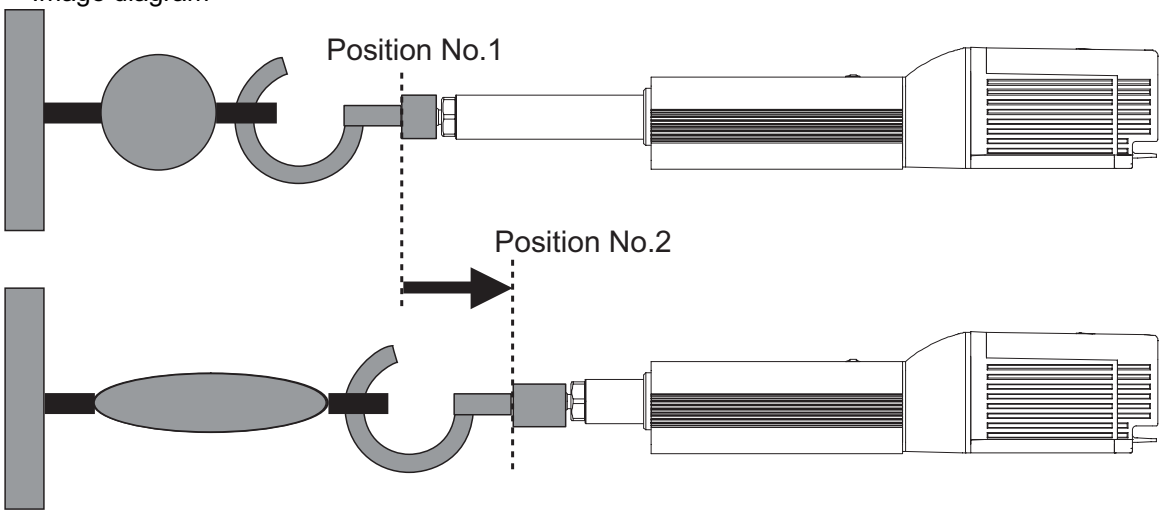

No.	Position [mm]	Velocity [mm/s]	Accele-ration [G]	Decele-ration [G]	Pressing [%]	Thresh-old [%]	Positioning width [mm]	Zone+ [mm]	Zone- [mm]	Acceleration/ Deceleration mode	Incre-mental	Transported load	Stop mode
0													
1	100.00	250.00	0.20	0.20	0	0	0.10	0.00	0.00	0	0	0	0
2	80.00	250.00	0.20	0.20	50	0	–50.00	0.00	0.00	0	0	0	0
3													

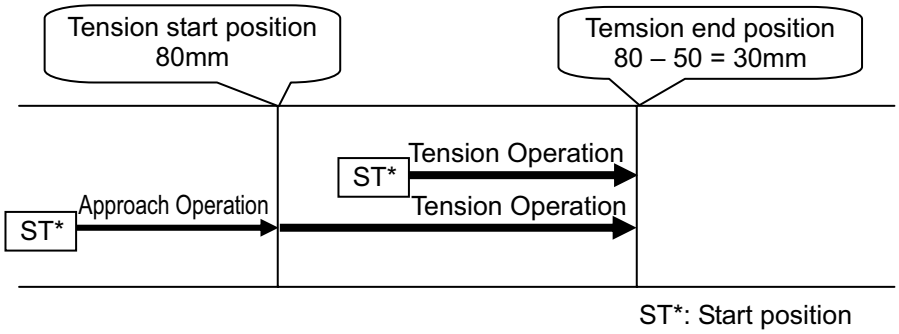

■ Control method

The control logic for the pulling operation is as same as the one for (3) Pressing Operation. The control method is explained below by using the sample position table shown above.

1) Position No.2 indicates the settings of tension operation. The settings of “Position” and “Positioning width” show the tension start position and the tension quantity, respectively. Attach – (negative sign) to the tension quantity. Specify the upper limit of the torque required for tension in percent (limited current value) in “Pressing”. The speed, acceleration, and deceleration are the conditions of positioning to the coordinate value (80mm) set in “Position”.
2) Position No.1 indicates the tension start preparation position. Specify a value larger than the coordinate value at which the tension provided by position No.2 ends (80 – 50 = 30mm) in “Position”.
3) First define the positioning in position No.1. Next, the operation in position No.2 moves the actuator to the position of 80mm at the setting speed and rating torque and change to the tension operation. The actuator moves by 50mm in the negative direction in the tension operation. The upper limit of the tensile force is the torque set in percent.
4) Like the pressing operation, Current Position No. PE* is output when the axis stops by pressing operation (pressing complete). Also, even when not stopping during a move in the set range (pressing error), a movement is made for the setting of “Positioning width”, and then turns ON.

⚠ Caution: (1) The speed during tension operation is set in Parameter No.34. The pressing operation speed is 20mm/s. The speed for pulling operation is same as that for pressing operation. Do not set any value larger than the value in the list.
If the speed setting in the position table is below this set value, pressing is performed with the set speed.

(2) The tension ready position should be the tension start position or forward. If not, the moving direction varies depending on the start position to be dangerous.
The tension operation from a coordinate (less than 30mm = 80 – 50 in the above example) located before the end position (30mm) changes to the pressing operation from the current position to the tension end position. Note that the tension operation after positioning to the position of 80mm does not take place.

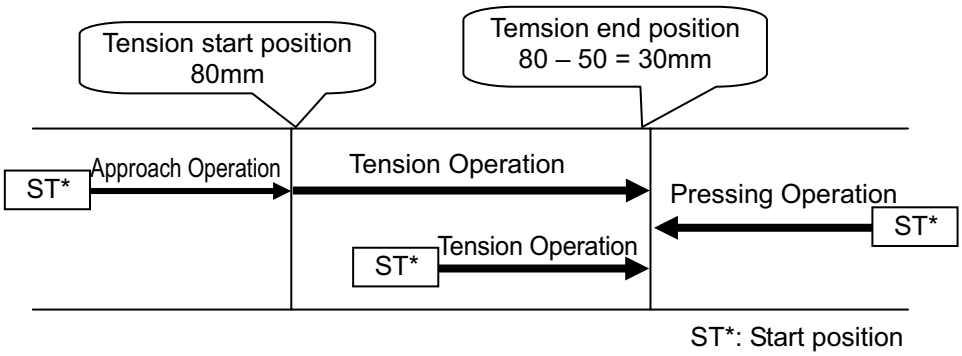

(3) The work is pulled also after completion of the tension. The work is drawn back or pulled further if the work is moved. When the work is drawn back before the approach position, alarm code 0DC “pressing operation range over error” occurs to stop the work. When the work is moved in the tension direction and the load current becomes less than the current limit value (pressing in percent), PE* is turned OFF. The work reaches the tension moving distance set in “Positioning width” to cause miss-pressing.

(5) Multi-step pressing

■ Image diagram

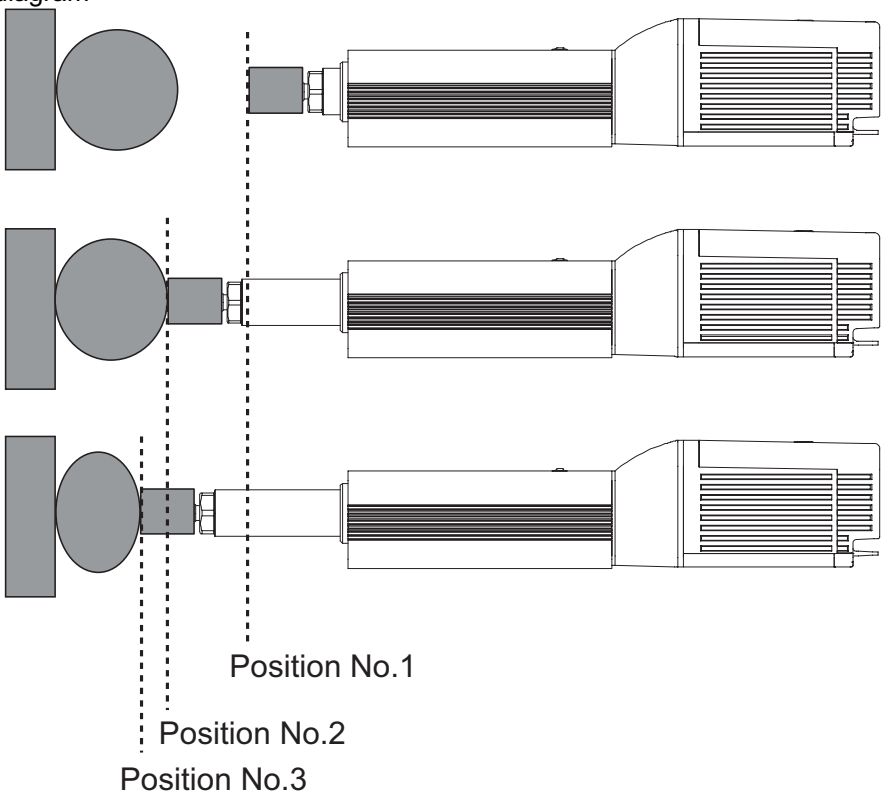

No.	Position [mm]	Velocity [mm/s]	Accele-ration [G]	Decele-ration [G]	Pressing [%]	Thresh-old [%]	Positioning width [mm]	Zone+ [mm]	Zone- [mm]	Acceleration/ Deceleration mode	Incre-mental	Transported load	Stop mode
0													
1	0.00	250.00	0.20	0.20	0	0	0.10	0.00	0.00	0	0	0	0
2	50.00	250.00	0.20	0.20	30	0	20.00	0.00	0.00	0	0	0	0
3	50.00	250.00	0.20	0.20	50	0	20.00	0.00	0.00	0	0	0	0
4													

■ Control method

It is available to change only the pressing pressure after performing the pressing operation once and while keeping the pressing.
The method of controlling multi-step pressing is the same as that described in (4) Pressing operation.

1) Set the weak pressing (30%) in position No.2 and perform the pressing operation.
2) If pressing complete signal PE2 is turned ON, start the pressing operation with pressing pressure (50%) greater than the first pressure set in position No.3.
In this particular operation, turn ON ST3 after completion of ST2, and turn OFF ST2 when PE2 is turned OFF. In usual case, do not turn ON two or more ST* signals simultaneously.
The position data in position No.3 should be the same as that in position No.2 except the setting in “Pressing”.

(6) Pause and Operation Interruption (ST*, *STP, RES, PE*)

Pause is possible during movement. In this mode, the following two methods are possible for pause.

1) Use of pause signal *STP
   Turning reset signal RES ON during the pause allows the remaining moving distance to be cancelled to interrupt the operation.
2) Use of start signal ST*
   This method is valid when Parameter No.27 “Move command type” is set to “0” (factory setting). The actuator can only be moved while the ST* signal is set to ON and stopped if ST* is turned OFF. Since setting the ST* signal to OFF is assumed as interrupt of operation, the remaining moving distance may not be cancelled.

I. Use of pause signal *STP

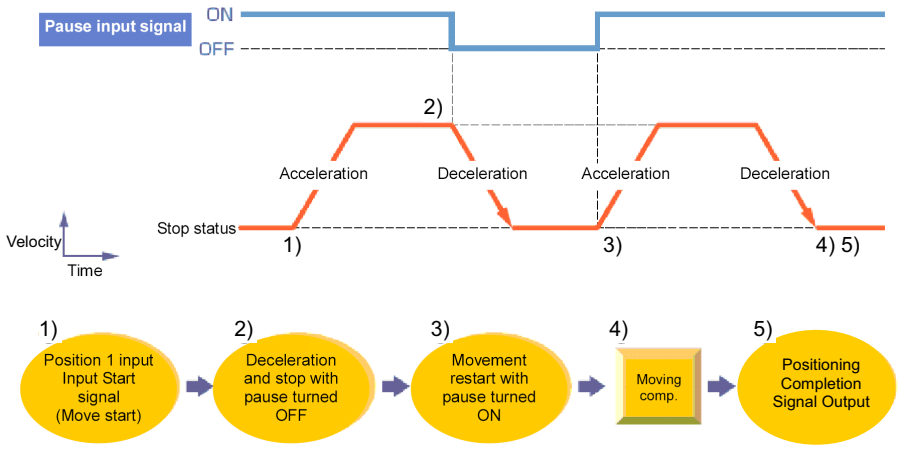

■ Control method

The pause signal is an input signal always set to ON. So, it is normally used to remain ON. Use this function for interlock in case where an object is invaded into the moving direction of the actuator being moved.

1) If pause signal *STP is turned OFF during operation of the actuator, the actuator is decelerated to a stop. The deceleration is defined by the value set in the position table. During pause, current position No. PE* is not turned ON.
2) If pause signal *STP is returned to ON, the actuator continues the remaining movement. The acceleration is the value set in the position table.
3) Turning reset signal RES ON during pause (*STP being OFF) allows the remaining movement to be canceled to interrupt the operation.

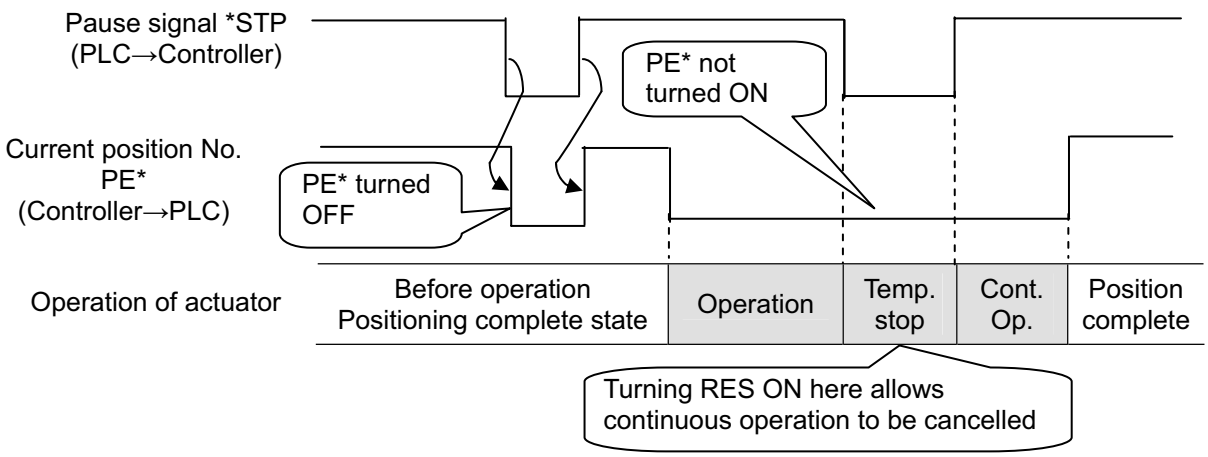

⚠ Caution: (1) At occurrence of an alarm in the release level [Note 1], RES can reset the alarm. Cancel the remaining moving distance after confirmation that alarm signal *ALM (being ON in normal state and OFF at occurrence of an alarm) is set to ON.
(2) If *STP is turned OFF when the actuator is in a positioning complete condition, PE* would not turn OFF.

Note 1 Refer to Chapter 8 Troubleshooting for details of alarms.

II. Use of start signal ST*

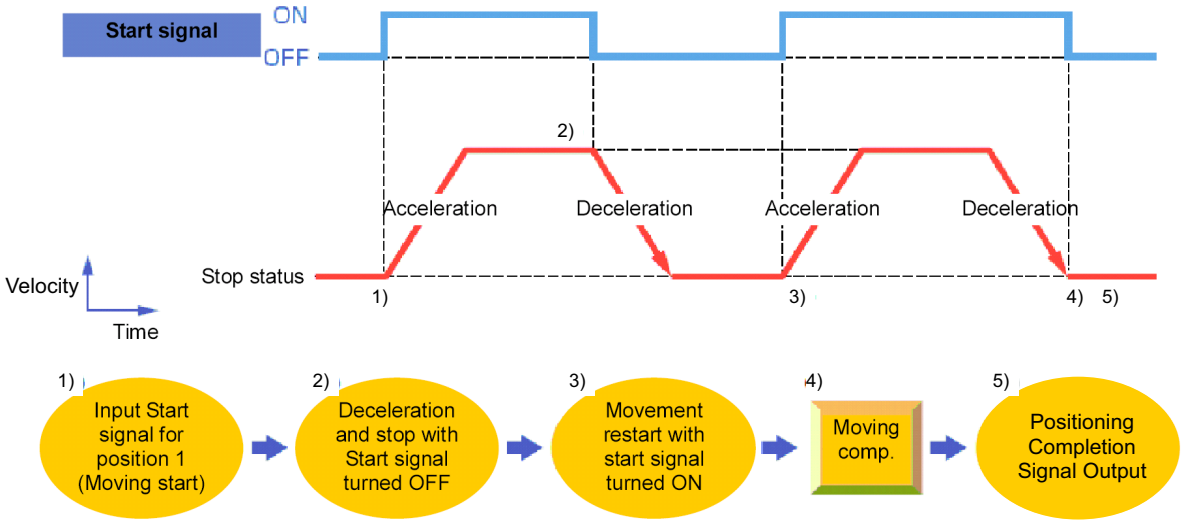

■ Control method

It is available to pause the operation if turning OFF the start signal ST* during the operation. Use the control method for interlock in case where an object is invaded into the moving direction of the actuator being moved.

1) If the ST* signal is turned OFF during movement, the actuator is paused. The deceleration is the value set in the position table.
2) ST* Signal being turned OFF is identified as a cancel of positioning. PE* would not turn ON.
3) If the ST* signal is turned ON again, the remaining movement is continued. The acceleration is the value set in the position table.

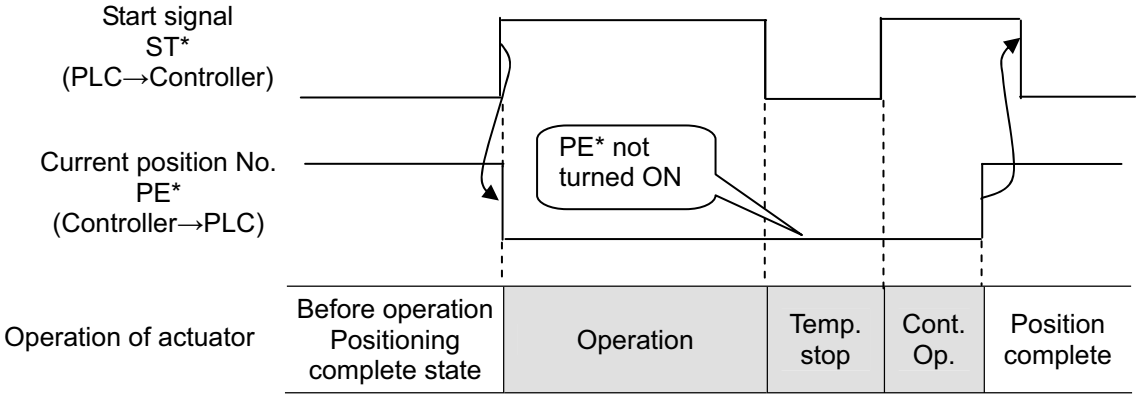

4.2.3 Operation in Positioner Mode 2 (Operation Using PIO Converter)

To perform an operation of Position Mode 2, PIO Converter (option) is necessary. By using PIO Converter, an operation with extended function of ERC3 is available.
It is available to select 6 types of PIO patterns with the parameters. This PIO Pattern cannot be switched over after the system is finished to be established or during the actuator operation. Choose the optimum pattern beforehand considering the system operation specifications and prepare the cables and sequence design.

[1] PIO Pattern Selection and Main Functions

○ : Valid function

PIO Pattern (Parameter No.25)		0	1	2	3	4	5
Mode		Positioning mode	Teaching mode	256-point mode	512-point mode	Solenoid valve mode 1	Solenoid valve mode 2
Major functions	Number of positioning points	64	64	256	512	7	3
	Operation with the Position No. Input	○	○	○	○	×	×
	Position No. direct command operation	×	×	×	×	○	○
	Positioning	○	○	○	○	○	○
	Velocity change during the movement	○	○	○	○	×	×
	Pressing (tension)	○	○	○	○	○	×
	Pitch feeding (relative moving feed)	○	○	○	○	○	×
	Home return signal input	○	○	○	○	○	×
	Pause	○	○	○	○	○	△ (Note 1)
	Jog moving signal	×	○	×	×	×	×
	Teaching signal input (Current position writing)	×	○	×	×	×	×
	Brake release signal input	○	×	○	○	○	○
	Moving signal output	○	○	×	×	×	×
	Zone signal output	○	×	×	×	○	○
	Position zone signal output	○	○	○	×	○	○

(Note 1) The pause signal is not provided. [Refer to 4.2.3 [8] (5).]

(Reference)

Zone signal output signal : The zone range is set to the Parameters No.1 and 2 and No.23 and 24, and becomes always effective after the home return is complete.

Position zone signal : This feature is associated with the specified position number. The zone range is set in the position table. The zone range is enabled only when the position is specified but disabled if another position is specified.

[2] Overview of major Functions

Major functions	Description
Number of positioning points	Number of positioning points which can be set in the position table.
Operation with the Position No. Input	Normal operation started by turning the start signal ON after position No. is entered with binary data.
Position No. direct command operation	Operation enabled by turning the signal directly corresponding to a position No. ON
Positioning	Positioning enabled at an arbitrary position by the data set in the position table
Velocity change during the movement	Velocity change enabled by activating another position No. during movement
Pressing (tension)	Operation by an arbitrary pressing (tension) force set in the position table enabled
Pitch feeding (relative moving feed)	Pitch feed by an arbitrary moving distance set in the position table enabled
Home return signal input	Input signal exclusively used for home return. Set to ON to start home return
Pause	The operation can be interrupted or continued by setting this signal to ON or OFF, respectively.
Jog moving signal	The actuator can only be moved while the input is set to ON.
Teaching signal input (Current position writing)	Setting the input signal to ON allows the coordinate value in the stop state to be written to the position table.
Brake release signal input	The brake (option) can only be released while the input is set to ON.
Moving signal output	The output signal is set to ON while the actuator is moved.
Zone signal output	The output signal is set to ON while the actuator is entered within the zone defined by the coordinate values set as parameters.
Position zone signal output	The output signal is set to ON while the actuator is entered within the zone defined by the coordinate values set in the position table.

[3] Power Supply and Emergency Stop Release (CP24, MPI, MPO, EMG(-))
[Refer to 3.3.3 Circuit Diagram]

(1) Built-in Drive Cutoff Relay Type (Model: RCB-CV-□□□)

1) Supply the power (CP24, GND), first.
2) Secondly, turn ON the motor power source and the emergency stop signal at the same time. Do not attempt to turn ON the emergency stop signal prior to the motor power source.
   Jumper MPI and MPO in advance (is already jumpered at the delivery). By releasing the emergency stop (turning ON EMG(-) Signal), built-in relay turns ON and power is supplied to the driving source.
3) Once the emergency stop signal EMG(-) is turned OFF, a cutoff of the motor power supply by the built-in relay is conducted at the same time as the servo being turned OFF. Do not attempt to cut off the motor power supply (MPI and MPO) in advance to the emergency stop signal EMG(-) being turned OFF.

(2) External Drive Cutoff Relay Type (Model: RCB-CVG-□□□)

1) Supply the power (CP24, GND), first.
2) Secondly, turn ON the motor power source and the emergency stop signal at the same time. Do not attempt to turn ON the emergency stop signal prior to the motor power source.
   Connect a contact for the cutoff relay between MPI and MPO and turn it ON at the same time as releasing the emergency stop (turning EMG(-) Signal ON).
3) If the emergency stop signal EMG turns OFF, the servo also turns OFF. Have the motor power (MPI, MPO) cut off at the same time. Do not attempt to cut off the motor power (MPI, MPO) prior to the emergency stop signal EMG being turned OFF.

[4] Time Constant for Control Signal Input

For the input signal for control of this controller, it is set to 6ms of input time constant to prevent an error operation due to chattering or noise from the next page and later.
Therefore, input each input signal for 6ms or more (Note) continuously. The signal cannot be identified if it is less than 6ms.

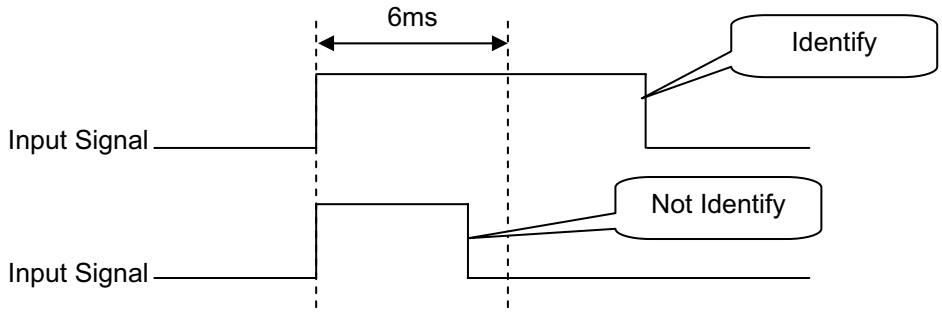

[5] Operation Ready and Auxiliary Signals

(1) Emergency stop status EMGS

PIO signal	Output
	*EMGS
Common to Patterns 0 to 5	○

○ : Available, ×: Unavailable

1) The emergency stop status EMGS is turned ON when in normal condition and turned OFF when EMG(-) terminal on “3.3.3 Circuit Diagram” is 0V (emergency stop condition or disconnected).
2) It turns back ON once the emergency stop condition is released and EMG(-) terminal goes up to 24V DC.
   Have an appropriate safety treatment such as interlock with this signal for the host controller (PLC, etc.).

[Caution] EMGS is different from the emergency stop output caused by a controller alarm.

(2) Servo ON (SON, SV, PEND)

PIO signal	Input	Output	
	SON	SV	PEND
Other than pattern 5	○	○	○
Pattern 5	○	○	×

○ : Available, ×: Unavailable

1) Servo ON signal SON is the input signal making the servo motor of the actuator operable.
2) If the servo-on is performed to enable operation, the SV output signal is turned ON. Concurrently positioning completion signal PEND is turned ON.
3) With the power being supplied, then controller cannot be operated while the SV signal remains OFF. If the SON signal is turned OFF under operation of the actuator, the actuator is decelerated and stopped with the maximam torque. After the stop, the servo OFF occurs to enter the motor into the free running state.
   For an actuator equipped with a brake, the brake gets to the operating condition.

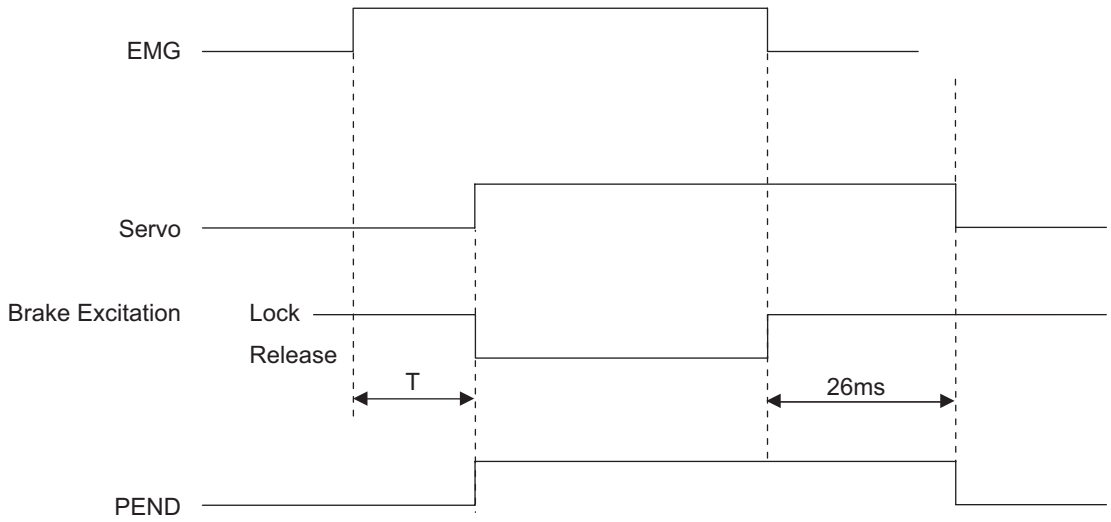

T (before detecting excitation) = SON signal identification (6ms) + Excitation detection time (T1 + T2) × Number of retry (10 times Max.) + Servo ON delay time (T3)
T (after detecting excitation) = SON signal identification (6ms) + Servo ON delay time (T3)

T1 : Parameter No.30 It differs depending on the setting of excitation detection type.
Set Value = 0 → 160ms
Set Value = 1, 2 → 220ms
T2 : Parameter No.29 Setting of excitation phase signal detection time
It is set to 10ms in the initial setting.
T3 : Fixed to 20ms

(Note) • Excitation check operation is performed at the first servo-on process after the power is turned ON, or when the home return is completed for the simple absolute type to identify the magnetic poles of the motor.
• PEND would not turn ON in the pause condition.

(3) Home Return (HOME, HEND, PEND, MOVE)

PIO signal	Input	Output		
	HOME	HEND	PEND	MOVE
Patterns 0 to 1	○	○	○	○
Patterns 2 to 4	○	○	○	×
Pattern 5	×(Note 1)	○	×	×

○ : Available, ×: Unavailable

Note 1 Pattern 5 cannot make a home return with HOME signal. Refer to 4.2.3 [8] (1) for how to perform a home-return operation.

The HOME signal is intended for automatic home return. The HOME signal is caught at the rising edge (ON edge) to start the home return. At completion of the home return, home return completion signal HEND is turned ON. The home-return complete signal HEND is kept ON unless the memory of origin point is lost for a reason such as alarm. During the home return operation, positioning completion signal PEND and moving signal MOVE are set to OFF and ON, respectively.

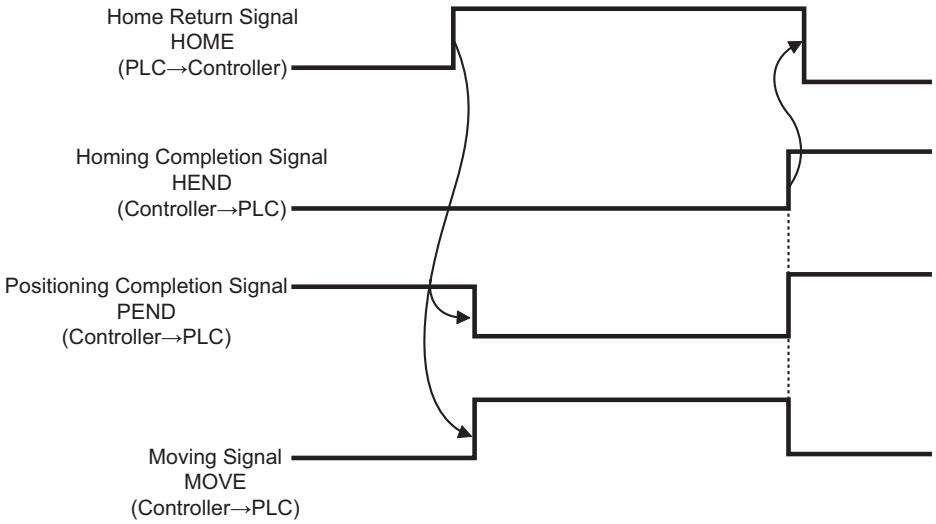

[Operation of Actuator]

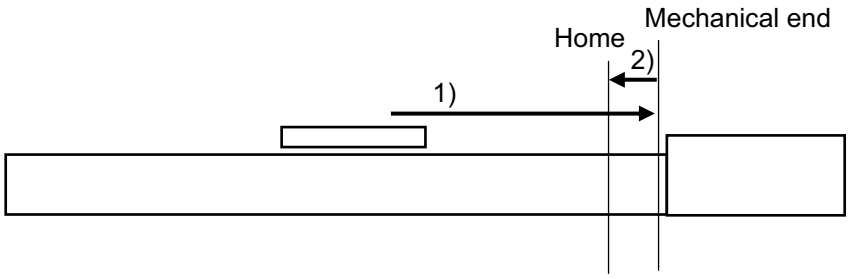

1) With the HOME signal being ON, the actuator moves toward the mechanical end at the home return speed. The movement speed is 20mm/s.
2) The actuator is turned at the mechanical end and stopped at the home position. The moving distance is the value set by Parameter No.22 “Home return offset level”.

⚠ Caution: In the home reverse specification, the actuator moves in the reverse direction. Make sure to refer to Chapter 7 Parameter when a change to Parameter No.22 “Home return offset level”.

(4) Zone Signal and Position Zone Signal (ZONE1, ZONE2, PZONE)

PIO signal	Output		
	ZONE1	ZONE2 (Note 2)	PZONE (Note 2)
Pattern 0	○	○	○
Pattern 1	○ (Note 2)	×	○
Pattern 2	○ (Note 2)	×	○
Pattern 3 (Note 1)	×	×	×
Pattern 4	○	○	○
Pattern 5	○	○	○

○ : Available, ×: Unavailable

Note 1 Pattern 3 does not possess the zone signal output function.
Note 2 In Parameter No.149 Zone Output Switchover, ZONE can be selected instead of PZONE.

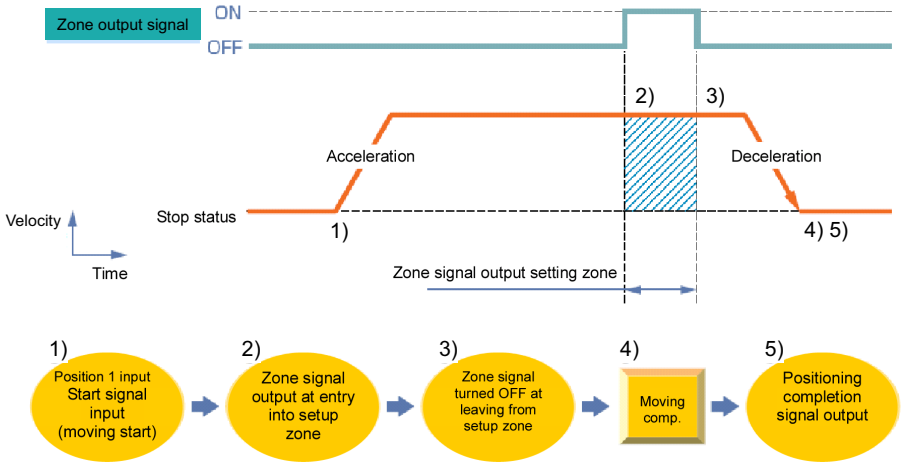

The relevant signal can be turned ON while the actuator passes or stops in the zone range in either of the following 2 types:

1) Zone signal (ZONE1, ZONE2)····· The output signal is turned ON at the position set by the proper parameter.
2) Position zone signal PZONE ····· The output signal is turned ON at the position set in the position table.

The feature can play a role as the sensor for judging whether the completion position is good or not at completion of pressing, setting the continuous operation zone in pitch feed or interlocking operations of other units in the setting zone.

I. Zone signal (ZONE1, ZONE2)
Set the zone range to the relevant parameter.

1) Parameter No.1 : Zone boundary 1+
2) Parameter No.2 : Zone boundary 1-
3) Parameter No.23 : Zone boundary 2+
4) Parameter No.24 : Zone boundary 2-

The zone signal ZONE is kept effective also during the emergency stop unless the memory of the origin is lost due to alarm.

II. Position zone signal PZONE

No.	Position [mm]	Velocity [mm/s]	Accele-ration [G]	Decele-ration [G]	Pressing [%]	Thresh-old [%]	Positioning width [mm]	Zone+ [mm]	Zone- [mm]	Acceleration/ Deceleration mode	Incre-mental	Transported load	Stop mode
0													
1	0.00	250.00	0.20	0.20	0	0	0.10	50.00	30.00	0	0	0	0
2	100.00	250.00	0.20	0.20	0	0	0.10	70.00	60.00	0	0	0	0
3	50.00	250.00	0.20	0.20	50	0	20.00	60.00	65.00	0	0	0	0

Setting of zone range

Zone ranges should be set in the position table.
While the operation corresponding to a position number is executed, the zone range set for the position number is valid. It is kept effective also during the emergency stop unless the actuator is operated or the memory of the origin is lost due to alarm.

III. Setting values and signal output range
The zone output range varies depending on the difference between the value set for the positive side of the zone and that for the negative side.

1) Value set for positive side > value set for negative side: The output signal is set to ON in the range and OFF out of the range.
2) Value set for positive side < value set for negative side: The output signal is set to OFF in the range and ON out of the range.

[Example of Line Axis]

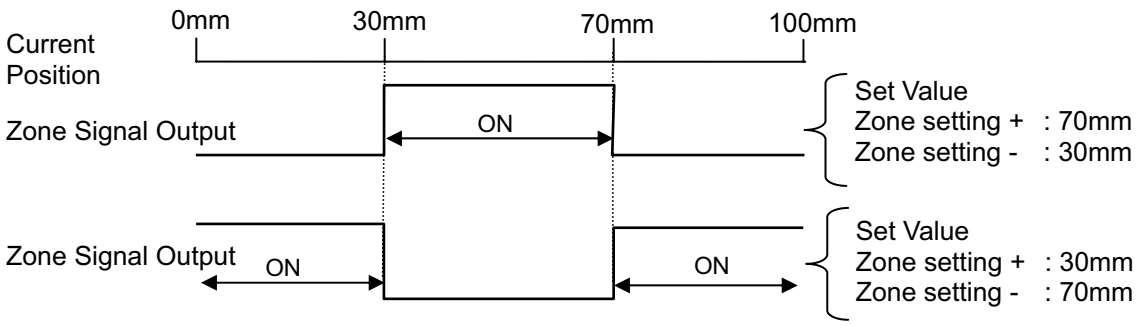

⚠ Caution: (1) Since this signal becomes effective after the coordinate system is established after the home return is completed, it would not be output just with the power turned ON.
(2) The zone detection range would not turn ON unless the value exceeds that of the minimum resolution (actuator lead length/800).

(5) Alarm, Alarm Reset (*ALM, RES)

PIO signal	Input	Output
	RES	*ALM
Common to Patterns 0 to 5	○	○

○ : Available, ×: Unavailable

1) Alarm signal *ALM is set to ON in the normal status but turned OFF at the occurrence of an alarm (Note 1) at a level equal to or higher than the operation release level.
2) Turning reset signal RES ON under occurrence of an alarm at the operation release level allows the alarm to be released. The action is taken at the rising edge (ON edge).

Note 1 Check the Chapter 8 Troubleshooting for details of alarms.

⚠ Caution: (1) Reset signal RES has two features, or alarm reset under occurrence of an alarm and operation interruption (cancellation of remaining moving distance) under temporary stop.
For the operation interruption under temporary stop, refer to the description of the operation in each pattern.
(2) The alarm reset should be done after the cause of the alarm is confirmed and removed. If alarm reset and restart are repeated many times without removal of the cause, a severe failure such as motor burnout may occur.

(6) Binary Output of Alarm Data Output (*ALM, PM1 to 8)

PIO signal	Output	
	*ALM	PM1 to 8
Common to Patterns 0 to 3	○	○
Pattern 4(Note 1)	○	×
Pattern 5(Note 1)	○	×

○ : Available, ×: Unavailable

(Note 1) Patterns 4 and 5 do not have this function.

1) If an alarm at a level equal to or higher than the operation release level occurs, completed position number output signals PM1 to PM8 output the alarm information in the binary code format.
2) The PLC can read the binary code of alarm signal *ALM as the strobe signal to refer to alarm information.

○: ON ●: OFF

*ALM	ALM8 (PM8)	ALM4 (PM4)	ALM2 (PM2)	ALM1 (PM1)	Binary Code	Description: Alarm code is shown in ( ).
○	●	●	●	●	–	Normal
●	●	●	○	●	2	Software reset during servo ON (090) Position number error during teaching (091) PWRT signal detected during movement (092) PWRT signal detected before completion of home return (093)
●	●	●	○	○	3	Move command during servo OFF (080) Position Command in Incomplete Home Return (082) Absolute position move command when home return is not yet completed (083) Movement Command during Home Return Operation (084) Position No. error during movement (085) Move command while pulse train input is effective (086) Command deceleration error (0A7)
●	●	○	●	●	4	Mismatched PCB (0F4)
●	●	○	●	○	5	
●	●	○	○	●	6	Parameter data error (0A1) Position data error (0A2) Position command data error (0A3) Unsupported motor/encoder type (0A8)
●	●	○	○	○	7	Excitement detection error (0B8) Home return timeout (0BE)

(Note) *ALM Signal is an active low signal. It is ON when the power is applied to the controller, and turns OFF when the signal is output.

○: ON ●: OFF

*ALM	ALM8 (PM8)	ALM4 (PM4)	ALM2 (PM2)	ALM1 (PM1)	Binary Code	Description: Alarm code is shown in ( ).
●	○	●	●	●	8	Actual speed excessive (0C0)
●	○	●	●	○	9	Overcurrent (0C8) Overvoltage (0C9) Overheat (0CA) Control power source voltage error (0CC) Drop in control supply voltage (0CE) Drive source error (0D4)
●	○	●	○	○	11	Command counter overflow (0A4) Command counter overflow in Incomplete home return (0D5) Deviation Overflow (0D8) Software stroke limit over error (0D9) Pressing motion range over error (0DC)
●	○	○	●	●	12	Servo error (0C1) Overload (0E0)
●	○	○	●	○	13	Encoder receipt error (0E5) Absolute encoder error detection 1 (0ED) Absolute encoder error detection 2 (0EE) Absolute encoder error detection 3 (0EF)
●	○	○	○	●	14	CPU Error (0FA) Logic Error (0FC)
●	○	○	○	○	15	Nonvolatile memory write verify error (0F5) Nonvolatile memory write timeout (0F6) Nonvolatile memory data destroyed (0F8)

(Note) *ALM Signal is an active low signal. It is ON when the power is applied to the controller, and turns OFF when the signal is output.

(7) Brake release BKRL

PIO signal	Input
	BKRL
Pattern 0	○
Pattern 1(Note 1)	×
Patterns 2 to 5	○

○ : Available, ×: Unavailable

(Note 1) Pattern 1 does not have this feature

The brake can be released while BKRL signal is set to ON. If a brake is installed in the actuator, the brake is automatically controlled by servo ON/OFF. Releasing the brake may be required to move the slider and/or the rod by hand in case of installation of the actuator in the machine or direct teach*1. This operation can be performed not only by the brake release switch on the front panel of the PIO converter, but also by the brake release signal BKRL.

*1 Direct teach : This operation is intended to get coordinate values to the position by moving the slider and/or the rod by hand.

⚠ Warning:
(1) Take sufficient care to release the brake. Inappropriate brake release may cause people to be injured and/or the actuator, the work and/or the machine to be damaged.
(2) After the brake is released, always make the brake applied again. Any operation with the brake remaining released is extremely dangerous. The slider or rod may drop to cause people to be injured and/or the actuator, the work and/or the machine to be damaged.
(3) Make certain that this signal is turned OFF (brake is activated) when the power is supplied to the controller.

[6] Operation with the Position No. Input = Operations of PIO Patterns 0 to 3

This is the operation method for PIO Patterns 0 to 3. This is a standard operation method when using PIO Converter that operates by turning the start signal ON after inputting the position number.
The control methods of positioning, pitch feed, and pressing are the same as those described before.

(1) Positioning [Basic] (PC1 to PC**, CSTR, PM1 to PM**, PEND, MOVE)

PIO signal	Input		Output		
	PC1 to PC**	CSTR	PM1 to PM**	PEND	MOVE
PIO pattern 0	PC1 to 32	○	PM1 to 32	○	○
PIO pattern 1	PC1 to 32	○	PM1 to 32	○	○
PIO pattern 2	PC1 to 128	○	PM1 to 128	○	×
PIO pattern 3	PC1 to 256	○	PM1 to 256	○	×

○ : Available, ×: Unavailable

(Note) Operation without home return leads the operation based on the data of the specified position No. after automatic home return. If one or more problems are found, interlock by home return complete signal HEND is required.

■ Sample use

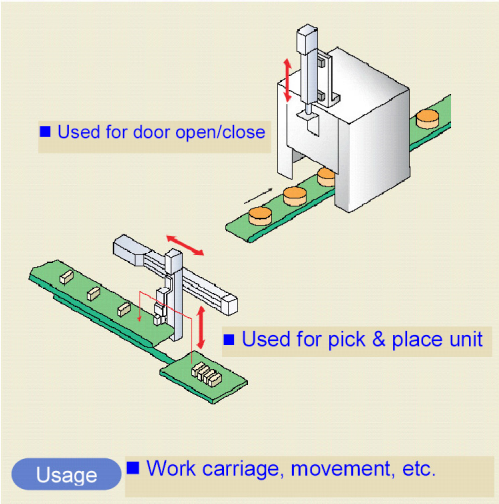

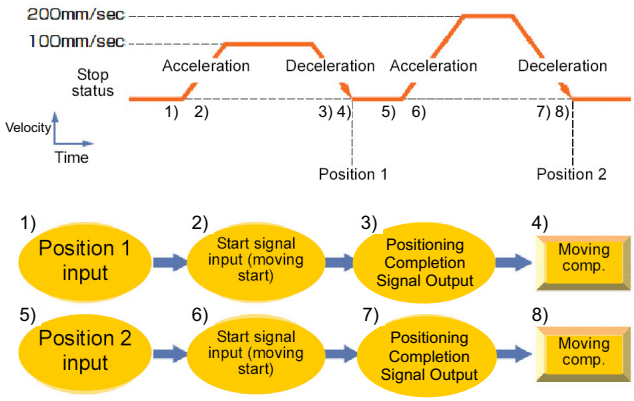

No.	Position [mm]	Velocity [mm/s]	Accele-ration [G]	Decele-ration [G]	Pressing [%]	Thresh-old [%]	Positioning width [mm]	Zone+ [mm]	Zone- [mm]	Acceleration/ Deceleration mode	Incre-mental	Transported load	Stop mode
0													
1	70.00	100.00	0.20	0.20	0	0	0.10	0.00	0.00	0	0	0	0
2	150.00	200.00	0.20	0.20	0	0	0.10	0.00	0.00	0	0	0	0

■ Control method

1) First enter command position No. PC1 to PC** with binary data. Next turn start signal CSTR ON. Then the actuator starts acceleration depending on the data in the specified position table for positioning to the target position.
2) At operation start, positioning complete signal PEND is turned OFF. Always turn the CSTR signal OFF. Without it, the completed position number is not output and the positioning complete signal is not turned ON at the completion of positioning.
3) When the positioning is completed, the positioning complete position numbers are output from complete position No.PM1 to PM** with binary data and also positioning complete signal PEND is turned ON.
4) Moving signal MOVE is turned ON as soon as the operation is started and turned OFF at the completion of positioning.
5) Positioning complete signal PEND is turned ON if the remaining moving distance enters into the positioning width. PEND signal that is turned ON will remain ON unless the start signal CSTR turns ON again, or the servo is turned OFF. It would not turn OFF even if it goes out of the positioning width. (Note 1)

Note 1 A switchover is available to INP (Setting 1) in Parameter No.39. PEND becomes an in-position signal that turns OFF out of the positioning width.

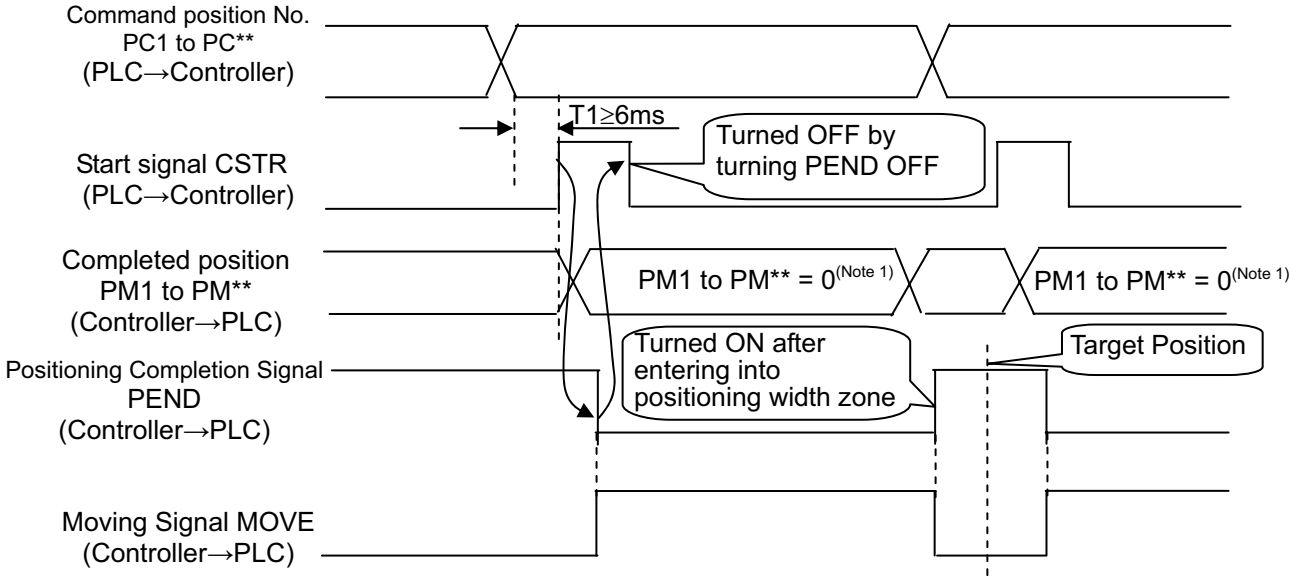

Note 1 The completion position No. output is set to 0 during movement of the actuator.

⚠Caution:

(1) Set the period taken from entering position No. to turning CSTR ON to 6ms or larger. In spite of 6ms timer process in the PLC, commands may be input to the controller concurrently to cause positioning to another position. Take the scanning time in the PLC into account to set a period as 2 to 4 times as the scanning time. Set the value similarly if the PLC reads the complete position.
(2) At the completion of positioning, positioning complete signal PEND is not turned ON if start signal CSTR remains ON. If this occurs, turn CSTR OFF then PEND is turned ON immediately. Therefore, create the sequence program so that turning PEND OFF makes CSTR turned OFF and the PLC waits for the state in which PEND is turned ON.
(3) At the positioning to the position same as that specified in the stop (complete) position number, PEND is turned OFF once but moving signal MOVE is not turned ON.
Therefore, use PEND to turn CSTR OFF.
(4) MOVE turns ON at the start of an operation and PEND turns OFF at almost the same time. MOVE turns OFF when there is no more movement command existing. Therefore, in the normal stop, PEND turns ON after MOVE is turned OFF, however, when the positioning width setting is wide, PEND would turn ON even during an operation of the actuator.

■ Binary data ○ : ON ● : OFF

Command position No.	PC256	PC128	PC64	PC32	PC16	PC8	PC4	PC2	PC1
Completed position No.	PM256	PM128	PM64	PM32	PM16	PM8	PM4	PM2	PM1
0	●	●	●	●	●	●	●	●	●
1	●	●	●	●	●	●	●	●	○
2	●	●	●	●	●	●	●	○	●
3	●	●	●	●	●	●	●	○	○
4	●	●	●	●	●	●	○	●	●
5	●	●	●	●	●	●	○	●	○
6	●	●	●	●	●	●	○	○	●
7	●	●	●	●	●	●	○	○	○
8	●	●	●	●	●	○	●	●	●
9	●	●	●	●	●	○	●	●	○
10	●	●	●	●	●	○	●	○	●
⋮	⋮	⋮	⋮	⋮	⋮	⋮	⋮	⋮	⋮
509	○	○	○	○	○	○	○	●	○
510	○	○	○	○	○	○	○	○	●
511	○	○	○	○	○	○	○	○	○

(2) Speed change during the movement

■ Sample use

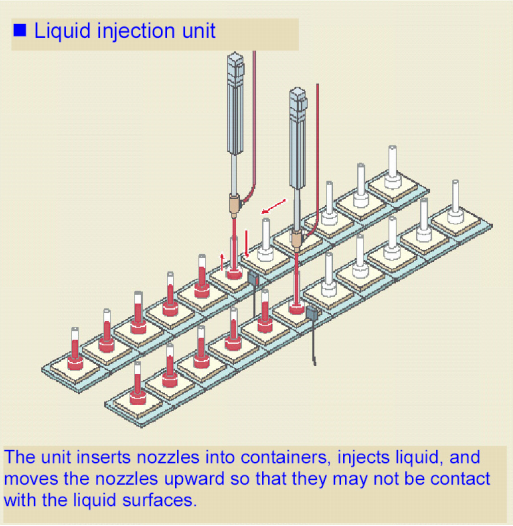

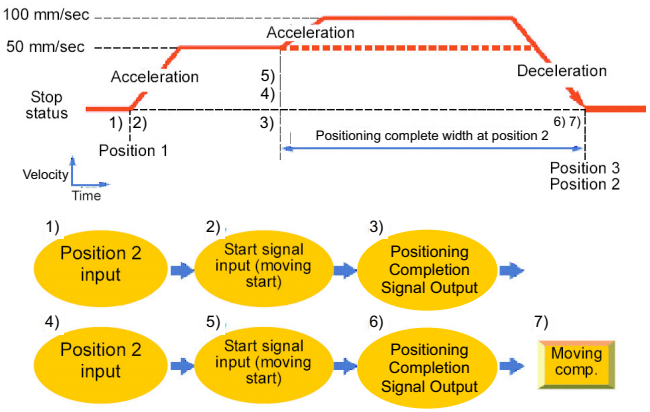

No.	Position [mm]	Velocity [mm/s]	Accele-ration [G]	Decele-ration [G]	Pressing [%]	Thresh-old [%]	Positioning width [mm]	Zone+ [mm]	Zone- [mm]	Acceleration/ Deceleration mode	Incre-mental	Transported load	Stop mode
0													
1	150.00	250.00	0.20	0.20	0	0	0.10	0.00	0.00	0	0	0	0
2	0.00	50.00	0.20	0.20	0	0	100.00	0.00	0.00	0	0	0	0
3	0.00	100.00	0.20	0.20	0	0	0.10	0.00	5.00	0	0	0	0

■ Control method

The speed of the actuator can be changed while it moves. Positions are used by the number of speeds. The method of controlling the operation to each position is the same as that described in (1) Positioning.

The example below describes the case of 2 speeds:

1) In this example, the speed is changed while the actuator moves from the position of 150mm to the position of 0mm. At first, set the positioning to the target position at the first speed in position No.2. In the positioning width, set the distance from the speed change position to the target position. The value is set to 100mm in the example. Thus, for position No.2, positioning complete signal PEND is turned ON at the position before the target position by 100mm.
2) Set the positioning to the target position at the second speed in position No.3.
3) Start position No.2. Then start position No.3 successively when PEND in position No.2 is turned ON. In normal positioning, position data specified later has always a priority over position data specified earlier. Thus, the operation in position No.3 is started on the way of the operation in position No.2.

In this example, the target positions No.2 and 3 are equal with each other. They may not be the same. However, setting the target positions to be equal with each other allows the distance from the speed change position to the target position to be known easily.
To increase in the number of speed change steps, add a position number and operation sequence, set the speed change position in the positioning width and operate the actuator continuously.

(3) Pitch Feeding (relative movement = incremental feed)

■ Sample use

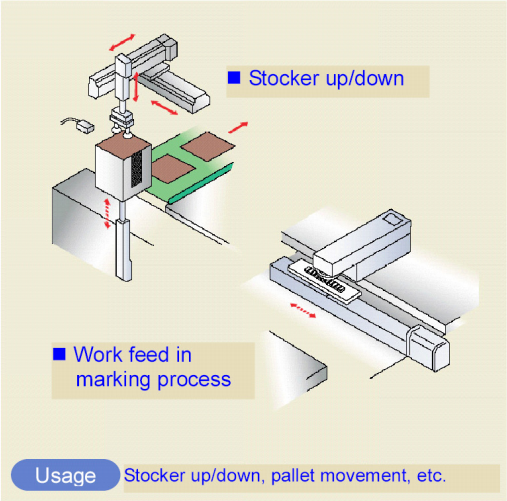

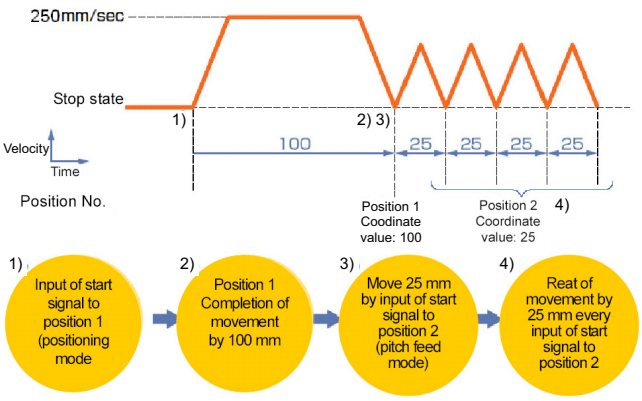

No.	Position [mm]	Velocity [mm/s]	Accele-ration [G]	Decele-ration [G]	Pressing [%]	Thresh-old [%]	Positioning width [mm]	Zone+ [mm]	Zone- [mm]	Acceleration/ Deceleration mode	Incre-mental	Transported load	Stop mode
0													
1	100.00	250.00	0.20	0.20	0	0	0.10	0.00	0.00	0	0	0	0
2	25.00	250.00	0.20	0.20	0	0	0.10	0.00	0.00	0	1	0	0

(Position No.2 sets pitch feed.)

■ Control method

1) The method of controlling pitch feed is the same as that described in (1) Positioning except the setting of the position table. Repeat the positioning of a specific position No.
2) For pitch feed, the position set in the position table indicates the pitch. Set the pitch (relative moving distance = incremental moving distance) in column “Position”.
3) If the operation command is issued, the actuator moves from the current stop position by “Position” in the position table. To perform continuous movement, repeat the operation. Any accumulation error does not occur because the home position (coordinate value 0) is specified as the base point.

⚠ Caution: In the pitch feed, do not perform a command with a pitch smaller than the minimum encoder resolution (lead/encoder pulse number) or that less than positioning accuracy repeatability.
There would be no deviation to occur even with the command because it is an operation command to the same position as the positioning complete condition, but the positioning control cannot be performed properly.

⚠ Caution: (1) If the actuator reaches the software limit corresponding to the stroke end in the pitch feed operation, the actuator stops at the position and positioning complete signal PEND is turned ON.

(2) Note that, in pitch feed just after pressing operation (to be in the pressing state), the start position is not the stop position at the completion of pressing but the coordinate value entered in “Position” of the pressing position data. The movement to the base point is added to the first pitch feed.

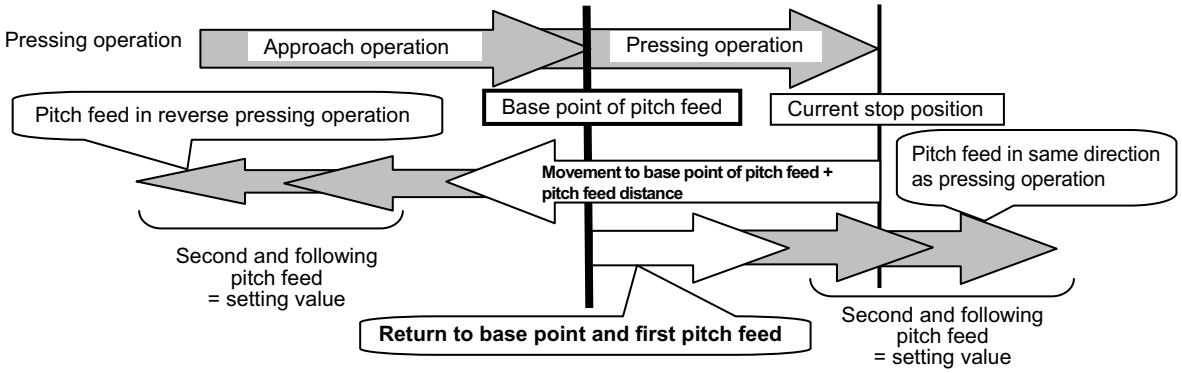

(3) If the position number for pitch feed is started (CSTR ON) during normal positioning, the actuator moves to the position of the coordinate resulting from adding the pitch feed distance to the target coordinate of the positioning. Repeating the start of pitch feed several times allows the pitch feed distance to be added to the target position by the number of repeats. Do not use the pitch feed function in such a way, because the PLC cannot confirm the complete position.

(4) Note that, if pitch feed is started (CSTR ON) repeatedly during pause, the actuator moves continuously by the distance based on the number of starts. In such a case, cancel the remaining moving distance by turning reset signal RES to ON in the pause state or take interlock so that the start signal is not turned ON during pause.

(5) At software limit (stroke end) in pitch feed, the actuator is decelerated to be stopped and positioning complete output PEND is output.

(6) MOVE turns ON at the start of an operation and PEND turns OFF at almost the same time. MOVE turns OFF when there is no more movement command existing. Therefore, in the normal stop, PEND turns ON after MOVE is turned OFF, however, when the positioning width setting is wide, PEND would turn ON even during an operation of the actuator.

(7) Pressing is enabled by using the pitch feed function. However, do not make control of changing to pitch feed on the way of normal positioning (before PEND turning ON). Pressing is interrupted by using the pitch feed function as soon as start signal CSTR is turned ON. The PLC cannot manage the position of the actuator any more.

(4) Pressing operation

■ Sample use

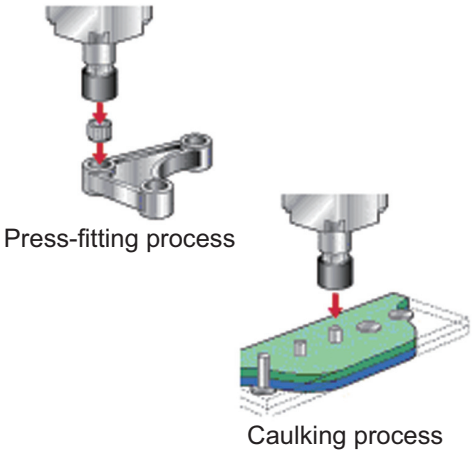

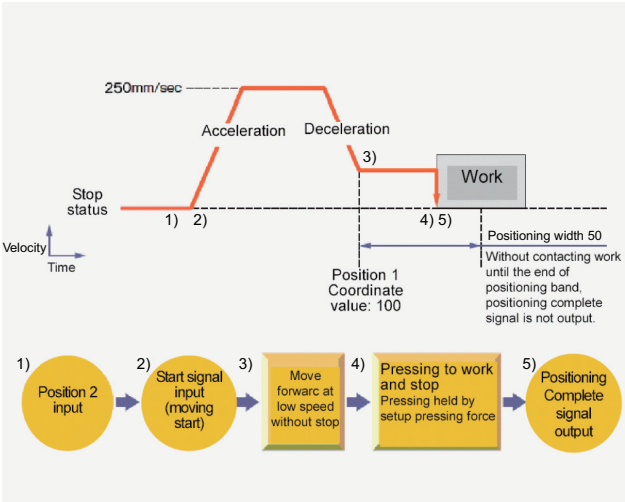

No.	Position [mm]	Velocity [mm/s]	Accele-ration [G]	Decele-ration [G]	Pressing [%]	Thresh-old [%]	Positioning width [mm]	Zone+ [mm]	Zone- [mm]	Acceleration/ Deceleration mode	Incre-mental	Transported load	Stop mode
0													
1	0.00	250.00	0.20	0.20	0	0	0.10	0.00	0.00	0	0	0	0
2	100.00	250.00	0.20	0.20	50	0	50.00	0.00	0.00	0	0	0	0

(Position No.2 sets pressing operation.)

■ Control method

1) The method of controlling the pressing operation is the same as that described in (1) Positioning except the setting of the position table. Any setting of “Pressing” in the position table allows the pressing operation to be done. “Positioning width” is assumed as pressing operation distance.
2) The actuator moves at the setting speed and rating torque to the position of the coordinate set in “Position” in the similar way as normal positioning. Then the operation changes to pressing. The amount of movement during the pressing operation is the set value in “Positioning Width” and the pressing operation is executed with the torque (current limit value) in % set in “Pressing” in PIO Patterns 1 to 3 as the upper limit.
3) The control method is the same as that in (1) Positioning. However, the processing of positioning complete signal PEND is different from that in (1) Positioning.
PEND is output when the shaft is stopped by pressing (pressing complete). If the work is not subject to pressing (miss-pressing), the actuator moves by the value set in “Positioning width” to stop but PEND is not turned ON.

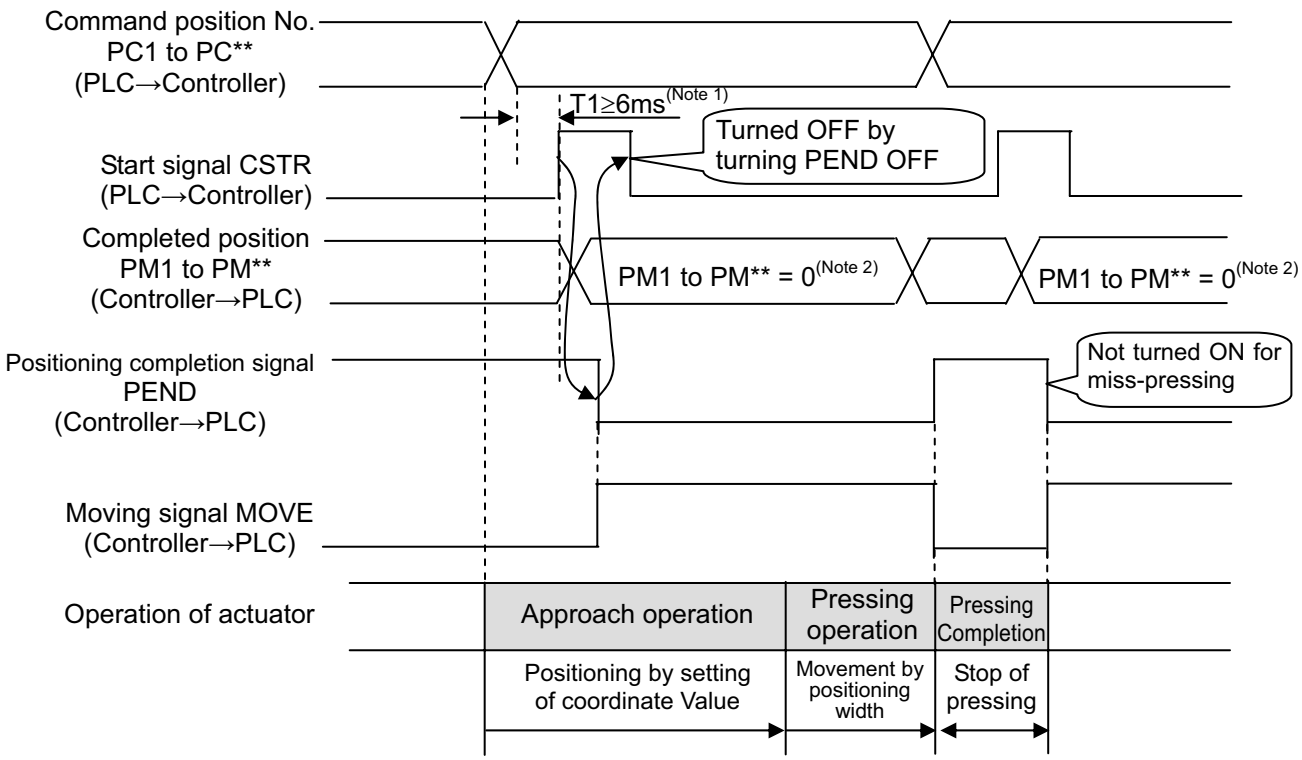

Note 1 Set the period taken from entering the position number to turning CSTR ON to 6ms or longer. Because 6ms timer process on the PLC is also entered to the controller, positioning at another position may occur. Take the PLC scan time into account.

Note 2 The completion position No. output is set to 0 during movement of the actuator.

⚠ Caution: (1) The speed during pressing operation is set in Parameter No.34. The pressing operation speed is 20mm/s.
Do not set any value larger than the value in the list. If the speed setting in the position table is below this set value, pressing is performed with the set speed.

(2) The approach start position of pressing should be located at or before the pressing start position (coordinate 100mm or less in the above example) If not, the moving direction varies depending on the start position to be dangerous.
For example, pressing at coordinate larger than the pressing end position (larger than 150mm) is performed in the direction from the current position to the pressing end position. Note that pressing after positioning to the position of coordinate 100mm does not take place.

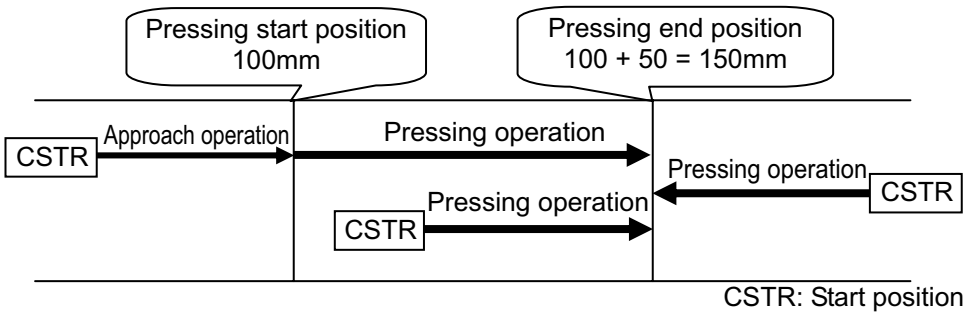

(3) The work is pressed after the pressing is completed. The work may move backward or forward. If the actuator is moved backward before the approach position, alarm code 0DC “Pressing operation range over error” occurs to stop the actuator. In movement of the work in the pressing direction, PEND is turned OFF if the load current becomes lower than the current limit (pressing [%]). Miss-pressing occurs when the actuator moves by the pressing moving distance set in “Positioning width”.

(4) Do not make control of changing to pressing on the way of normal positioning (before PEND turning ON). Depending on the position at which start signal CSTR is turned ON, the pressing is performed improperly. Then the PLC cannot manage the position of the actuator.

(5) If the actuator gets pressed to the work during the approach operation, 0DC “Pressing operation range over error” would be issued.

Judging completion of pressing operation

The operation monitors the torque (current limit value) in percent in “Pressing” of the position table and turns pressing complete signal PEND ON when the load current satisfies the condition shown below during pressing. PEND is turned ON at satisfaction of the condition if the work is not stopped.
(Accumulated time in which current reaches pressing value [%]) – (accumulated time in which current is less than pressing value [%]) ≥ 255ms (Parameter No.6)

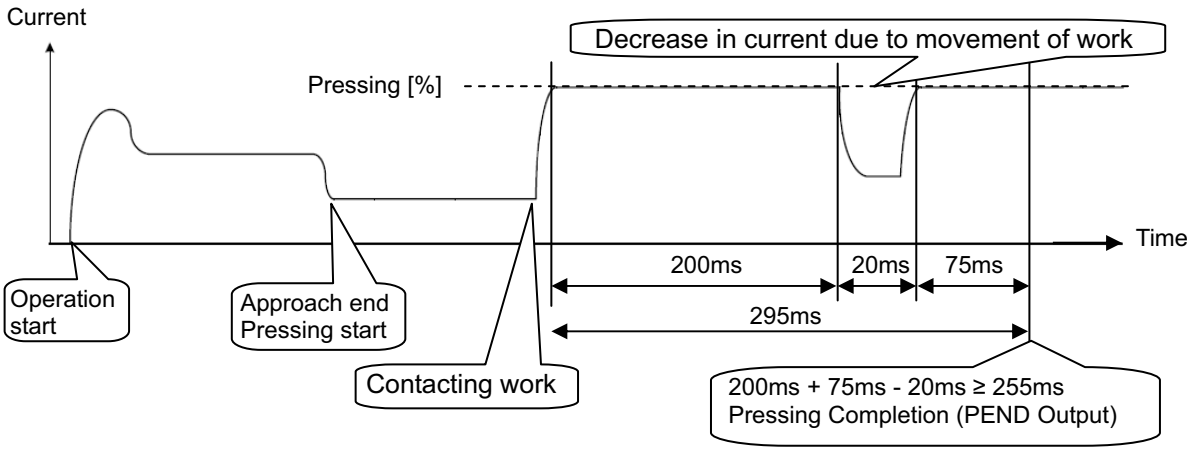

(5) Tension Operation

■ Image diagram

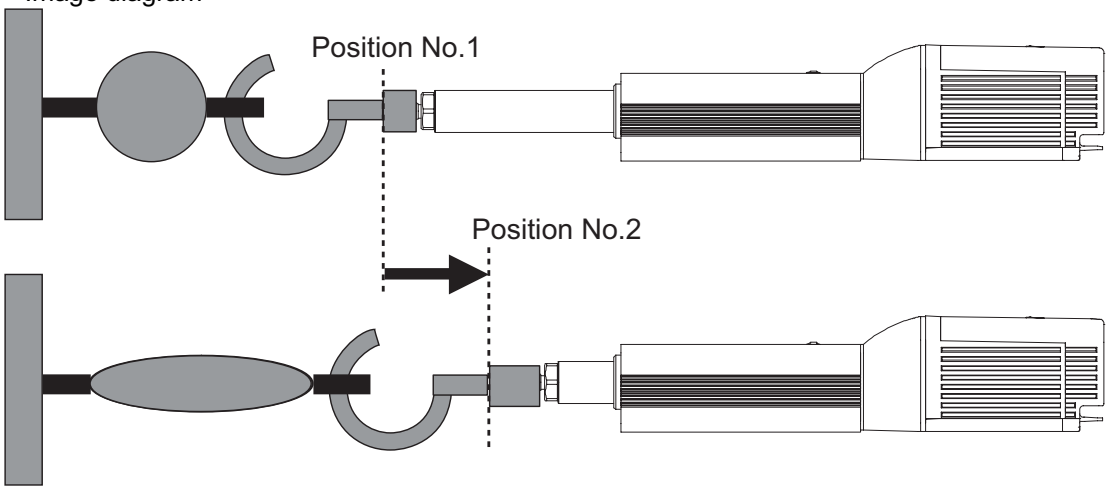

No.	Position [mm]	Velocity [mm/s]	Accele-ration [G]	Decele-ration [G]	Pressing [%]	Thresh-old [%]	Positioning width [mm]	Zone+ [mm]	Zone- [mm]	Acceleration/ Deceleration mode	Incre-mental	Transported load	Stop mode
0													
1	100.00	250.00	0.20	0.20	0	0	0.10	0.00	0.00	0	0	0	0
2	80.00	250.00	0.20	0.20	50	0	–50.00	0.00	0.00	0	0	0	0
3													

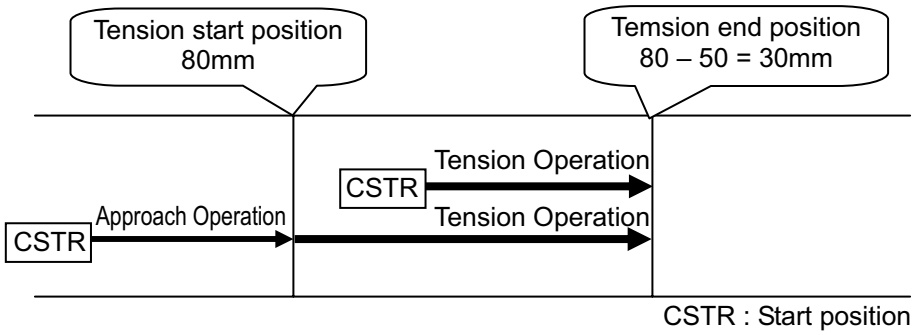

■ Control method

The method of controlling the tension operation is the same as that described in (4) Pressing operation. The control method is explained below by using the sample position table shown above.

1) Position No.2 indicates the settings of tension operation. The settings of “Position” and “Positioning width” show the tension start position and the tension quantity, respectively. Attach – (minus sign) to the tension quantity. Specify the upper limit of the torque required for tension in percent (current limit value) in “Pressing”. The speed, acceleration, and deceleration are the conditions of positioning to the coordinate value (80mm) set in “Position”.
2) Position No.1 indicates the tension start preparation position. Specify a value larger than the coordinate value at which the tension provided by position No.2 ends (80 – 50 = 30mm) in “Position”.

3) First define the positioning in position No.1. Next, the operation in position No.2 moves the actuator to the position of 80mm at the setting speed and rating torque and change to the tension operation. The actuator moves by 50mm in the negative direction in the tension operation. The upper limit of the tensile force is the torque set in percent.
4) In the similar way as pressing, the positioning complete signal is output when the shaft is stopped by tension (pressing complete). If the actuator cannot be stopped during movement within the setting positioning width (miss-pressing), it moves by the setting distance to stop but PEND is not turned ON.

⚠ Caution: (1) The speed during tension operation is set in Parameter No.34. The pressing operation speed is 20mm/s. The speed for pulling operation is same as that for pressing operation.
Do not set any value larger than the value in the list. If the speed setting in the position table is below this set value, pressing is performed with the set speed.

(2) The tension ready position should be the tension start position or forward. If not, the moving direction varies depending on the start position to be dangerous.
The tension operation from a coordinate (less than 30mm = 80 – 50 in the above example) located before the end position (30mm) changes to the pressing operation from the current position to the tension end position. Note that the tension operation after positioning to the position of 80mm does not take place.

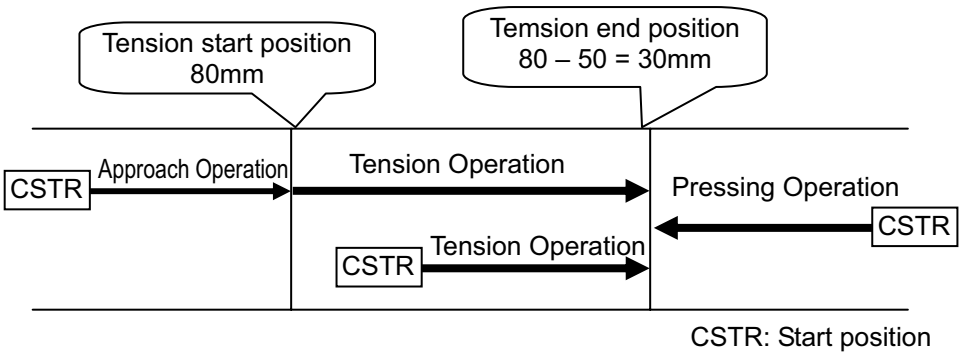

(3) The work is pulled also after completion of the tension. The work is drawn back or pulled further if the work is moved. When the work is drawn back before the approach position, alarm code 0DC “pressing operation range over error” occurs to stop the work. When the work is moved in the tension direction and the load current becomes less than the current limit value (pressing in percent), PEND is turned OFF. Naturally, the work reaches the tension moving distance set in “Positioning width” to cause miss-pressing.
(4) Do not make control of changing to tension operation on the way of normal positioning (before PEND turning ON). Depending on the position at which start signal is turned ON, the tension operation is performed improperly. Then the PLC cannot manage the position of the actuator.

(6) Multi-step pressing

■ Image diagram

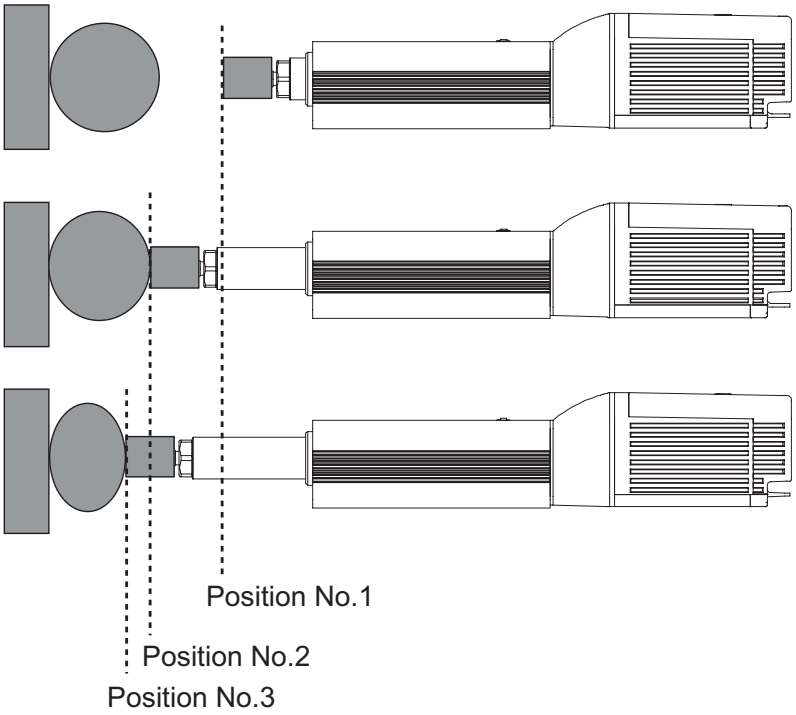

No.	Position [mm]	Velocity [mm/s]	Accele-ration [G]	Decele-ration [G]	Pressing [%]	Thresh-old [%]	Positioning width [mm]	Zone+ [mm]	Zone- [mm]	Acceleration/ Deceleration mode	Incre-mental	Transported load	Stop mode
0													
1	0.00	250.00	0.20	0.20	0	0	0.10	0.00	0.00	0	0	0	0
2	50.00	250.00	0.20	0.20	30	0	20.00	0.00	0.00	0	0	0	0
3	50.00	250.00	0.20	0.20	50	0	20.00	0.00	0.00	0	0	0	0
4													

■ Control method

After pressing, the pressing pressure can only be changed in the pressing state.
The method of controlling multi-step pressing is the same as that described in (4) Pressing operation. The control method is explained below by using the sample position table shown above.

1) Set the weak pressing (30%) in position No.2 and perform the pressing operation.
2) If pressing complete signal PEND is turned ON, start the pressing operation with pressing pressure (50%) greater than the first pressure set in position No.3.
   The position data in position No.3 should be the same as that in position No.2 except the setting in “Pressing”.
3) To add a pressing step with another pressing pressure, add a sequence consisting of a position number and a pressing operation.

(7) Teaching by PIO (MODE, MODES, PWRT, WEND, JISL, JOG+, JOG-)

PIO signal	Input					Output	
	MODE	JISL	JOG+	JOG-	PWRT	MODES	WEND
Other than pattern 1	×	×	×	×	×	×	×
Pattern 1	○	○	○	○	○	○	○

○: Existence of signal, ×: No signal

(Note) It is the function available only in Pattern 1.

Teaching by PIO is enabled.
It is possible to select the teaching mode, move the actuator to the target position with jog or inching operation, and write the coordinate value into any position number.

I. Teaching Mode Selecting

1) To select the teaching mode, set teaching mode signal MODE to ON. If the teaching mode is selected, mode status signal MODES is turned ON.
   - While the actuator is operating, MODE signal input is invalid. Therefore, after the operation is completed, the MODES signal is turned ON.
   - With the MODES signal being ON, the CSTR signal is changed to teaching signal PWRT. Therefore, it is not possible to operate the actuator by specifying a position No.
2) To cancel the teaching mode to return to the normal operation mode, set the MODE signal to OFF. If the MODE signal is turned OFF, the MODES signal is turned OFF to return to the normal operation mode.

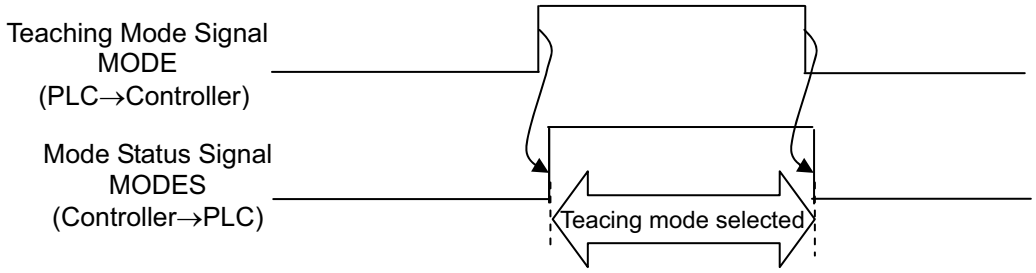

II. Jog/inching switch and jog input

1) Jog/inching switching signal JISL indicates whether the jog operation[Note 1] or inching operation[Note 2] is performed by the jog input signal.
   JISL signal OFF ····· Jog operation
   JISL signal ON ····· Inching operation
2) There are two jog input signals, or JOG+ for operation in the positive direction and JOG- for operation in the negative direction.

Note 1 Jog operation: The actuator is moved while the jog input signal is set to ON.
- JOG+ ·····While JOG+ is set to ON, the actuator is moved in the positive direction. If JOG+ is turned OFF, the actuator is decelerated and then stopped.
- JOG- ·····While JOG- is set to ON, the actuator is moved in the negative direction. If JOG- is turned OFF, the actuator is decelerated and then stopped.
- Velocity ····· Value set in Parameter No.26 “PIO jog speed”.
- Acceleration/Deceleration ····· Rating acceleration/deceleration of actuator
- Pause Signal *STP ····· Enabled

Note 2 Inching operation: Once the jog input signal is turned ON, the actuator is moved by a certain distance.
- JOG+ ·····Once JOG+ is turned ON, the actuator is moved by a certain distance in the positive direction.
- JOG- ·····Once JOG- is turned ON, the actuator is moved by a certain distance in the negative direction.
- Moving distance ····· Value set in Parameter No.48 “PIO inching distance”.
- Velocity ····· Value set in Parameter No.26 “PIO jog speed”.
- Acceleration/Deceleration ····· Rating acceleration/deceleration of actuator
- Pause Signal *STP ····· Enabled

⚠ Warning: (1) In home return incomplete state, software limit cannot stop the actuator. Take interlock and prohibit the operation or perform the operation carefully.
(2) If the JISL signal is changed during inching operation, the inching being operated is continued. If JISL is changed during job operation, the jog is stopped.

III. Writing current data to position table

1) The feature is valid only when the teaching mode is selected (with the MODES signal being ON).
2) Specify the position number to which the current data is written in the binary data format in command position No.PC1 to PC32. Turn current value writing signal PWRT ON.
3) The coordinate value of the current position is written into the position table for the controller. If position data is written previously, only the coordinate value in “Position” is only rewritten.
   If nothing is written, the values set in the parameters below are written as the speed, acceleration/deceleration, positioning width, acceleration/deceleration mode and stop mode. Other data is set to “0”.
   - Velocity ····· Parameter No.8 “Default speed”
   - Acceleration ····· Parameter No.9 “Default acceleration/deceleration”
   - Deceleration ····· Parameter No.9 “Default acceleration/deceleration”
   - Positioning width ····· Parameter No.10 “Default positioning width (in-position)”
   - Acceleration/deceleration mode ··· Parameter No.52 “Default acceleration/deceleration mode”
   - Stop mode ····· Parameter No.53 “Default stop mode”
4) At the completion of writing, controller write complete signal WEND is output. Then turn the PWRT signal OFF.
5) When the PWRT signal is turned “OFF” the WEND signal is also turned “OFF”.
   Turn OFF PWRT after confirming WEND is turned ON.
   Turning it OFF before turning ON disturbs the proper data writing.

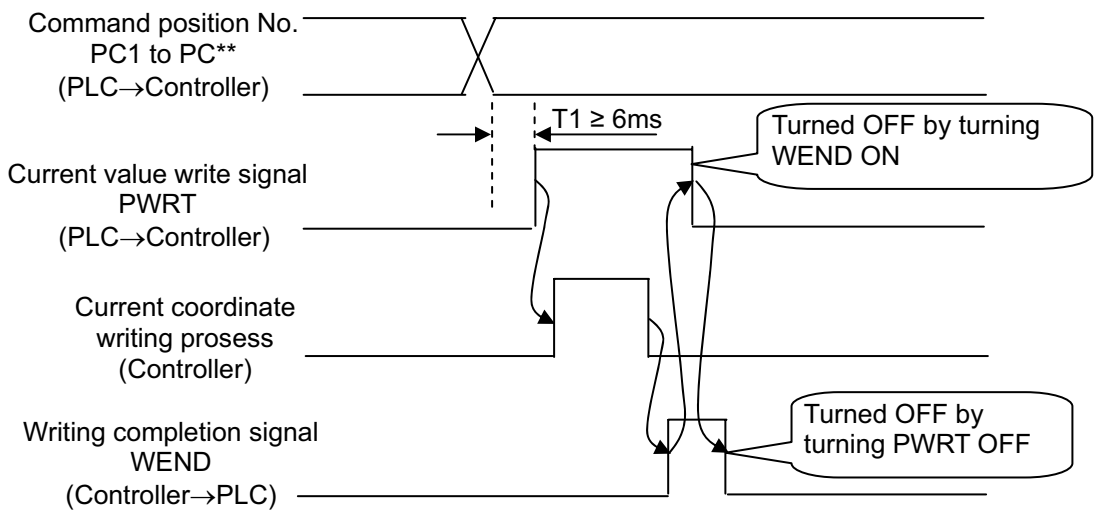

⚠ Caution:

(1) Set the period taken from entering position No. to turning the PWRT ON to 6ms or longer. In spite of 6ms timer process in the PLC, commands may be input to the controller concurrently to cause writing to another position. Take the scanning time in the PLC into account, set a period as 2 to 4 times as the scanning time.

(2) Turning the PWRT signal ON in the state in which home return is not completed (the HEND signal is set to ON) causes alarm 093 "PWRT signal detected before completion of home return" to occur.

(3) Turning PWRT signal OFF before turning WEND signal ON disturbs the proper data writing.

(4) Writing processing with position table screen remaining open on a teaching tool such as PC cannot lead the data on the screen to be updated. To update and confirm writing data, take the following actions:

1) PC software ·····Left-click the button.

2) Teaching Pendant or Touch Panel Teaching ···Change to user adjustment screen, input "4" in adjustment No. and return to the position table screen after software reset.

Check the relevant Instruction Manual for details of operation.

(8) Pause and Operation Interruption (*STP, RES, PEND, MOVE)

PIO signal	Input		Output	
	*STP	RES	PEND	MOVE
Pattern 0 to 1	○	○	○	○
Pattern 2 to 3	○	○	○	×

○: Available, ×: Unavailable

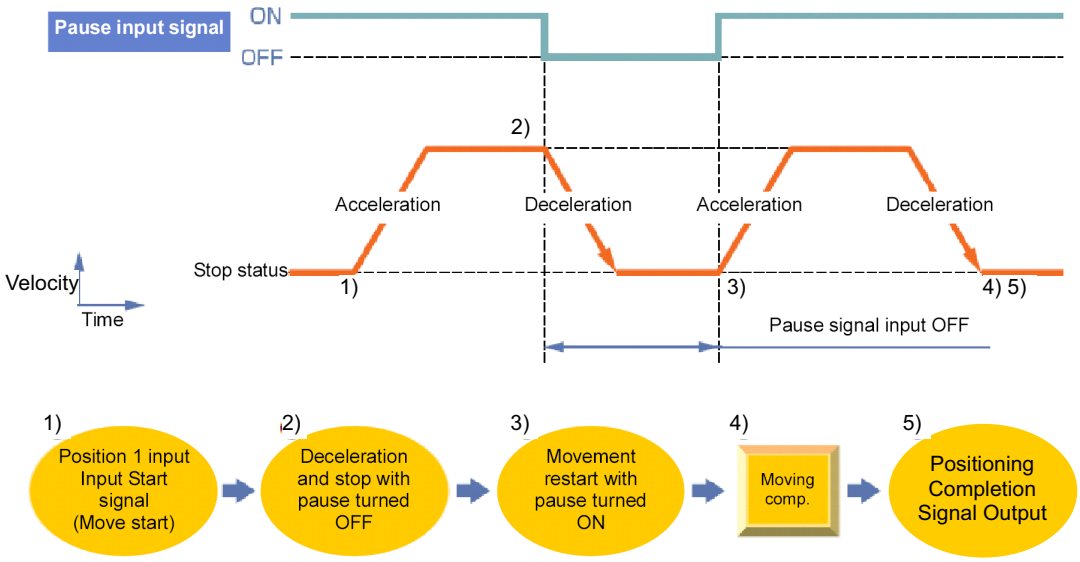

■ Control method

Pause is possible during movement. In addition, the remaining moving distance can be cancelled to interrupt the operation.

The pause signal is an input signal always set to ON. So, it is normally used to remain ON. Use this function for interlock in case where an object is invaded into the moving direction of the actuator being moved.

1) If pause signal *STP is turned OFF during operation of the actuator, the actuator is decelerated to a stop. The deceleration is defined by the value set in the position table.
2) During pause, moving signal MOVE is set to OFF but positioning complete signal PEND is not turned ON.
3) If pause signal *STP is returned to ON, the actuator continues the remaining movement. The acceleration is the value set in the position table.
4) Turning reset signal RES ON during pause (*STP being OFF) allows the remaining movement to be canceled to interrupt the operation.

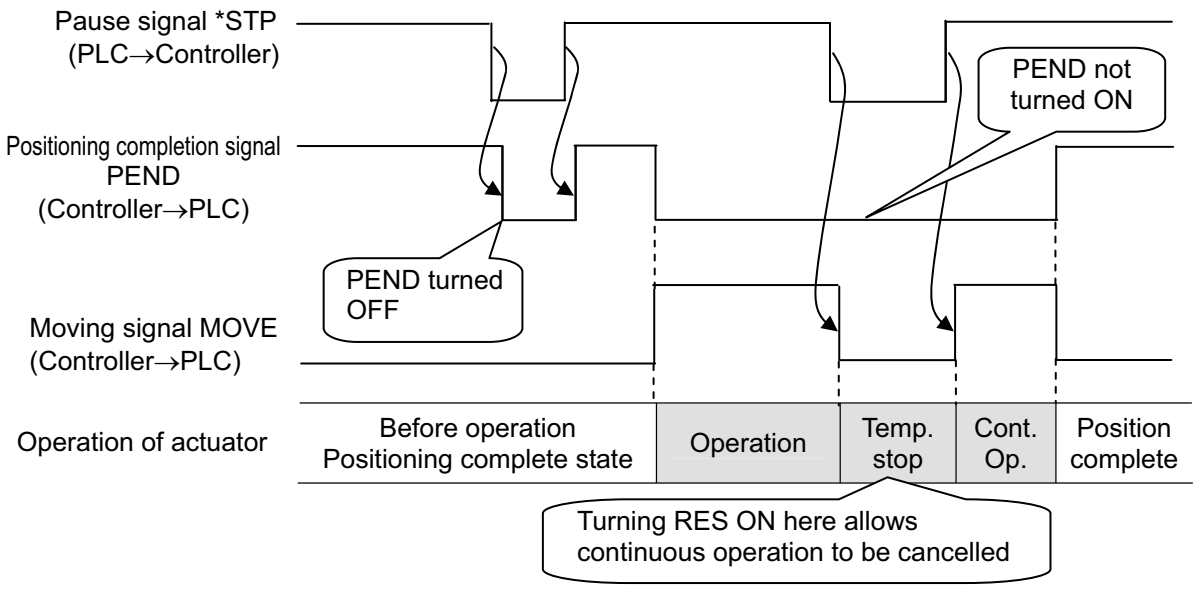

⚠ Caution: (1) At occurrence of an alarm in the release level(Note 1), RES can reset the alarm. Cancel the remaining moving distance after confirmation that alarm signal *ALM (being ON in normal state and OFF at occurrence of an alarm) is set to ON.
(2) Turning *STP OFF with the actuator being in the positioning complete state causes PEND to be turned OFF. Note that this situation may not occur when a sequence program is created.

Note 1 Check the Chapter 7 Troubleshooting for details of alarms.

[7] Direct Position Specification (Solenoid Valve Mode 1) = Operation of PIO Pattern 4

The start signal is provided for every position number. Only turning ON the relevant input signal according to the table shown below allows the operation based on the data in the target position number to be performed. The operation mode is called the solenoid valve mode because solenoid valves can directly drive air cylinders.

At the completion of positioning, every completed position number is output as well as the positioning complete signal.

Positioning, pressing, and pitch feed are possible. Their control methods are the same as those of other patterns.

(1) Positioning [Basic] (ST1 to ST6, PE1 to PE6, PEND)

Position No.	Input	Output	
0	ST0	PE0	PEND
1	ST1	PE1	PEND
2	ST2	PE2	PEND
3	ST3	PE3	PEND
4	ST4	PE4	PEND
5	ST5	PE5	PEND
6	ST6	PE6	PEND

[Caution]
- Speed change is not allowed during movement.
- If start signal ST* is issued without home return, the home return operation is automatically done before the operation based on the data of the specified position number. When this specification is not desired, interlock by home return complete signal HEND is required.

■ Sample use

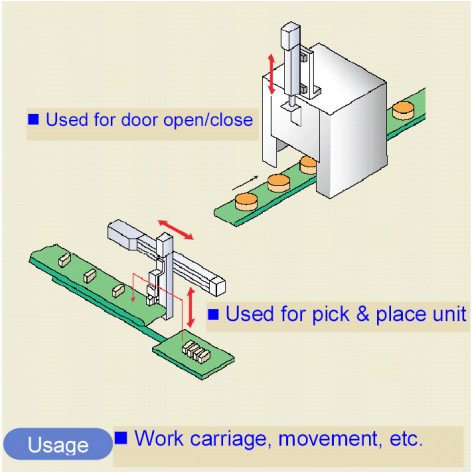

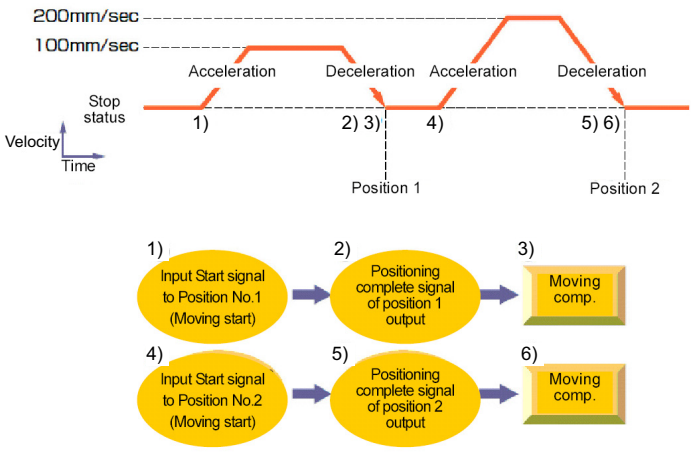

No.	Position [mm]	Velocity [mm/s]	Accele-ration [G]	Decele-ration [G]	Pressing [%]	Thresh-old [%]	Positioning width [mm]	Zone+ [mm]	Zone- [mm]	Acceleration/ Deceleration mode	Incre-mental	Transported load	Stop mode
0	0.00	100.00	0.20	0.20	0	0	0.10	0.00	0.00	0	0	0	0
1	70.00	100.00	0.20	0.20	0	0	0.10	0.00	0.00	0	0	0	0
2	150.00	200.00	0.20	0.20	0	0	0.10	0.00	0.00	0	0	0	0

■ Control method

1) When start signal ST* is turned ON, the actuator starts acceleration based on the data in the specified position table for positioning to the target position.
2) For PIO converter, when the positioning is finished, the positioning complete signal PEND turns ON at the same time as Current Position No. PE* of the commanded position.
3) For PIO converter, turn OFF ST* Signal once PEND Signal is turned ON.
4) Current position No. PE* and positioning completion signal PEND are turned ON if the remaining moving distance is entered into the positioning width zone. Once Current Position No. PE* and PEND Signal are turned ON, they remain ON unless the start signal ST* is turned ON or the servo is turned OFF. They would not turn off even out of the positioning width range. (Note 1)

Note 1 A switchover is available to INP (Setting 1) in Parameter No.39. PEND becomes an in-position signal that turns OFF out of the positioning width.

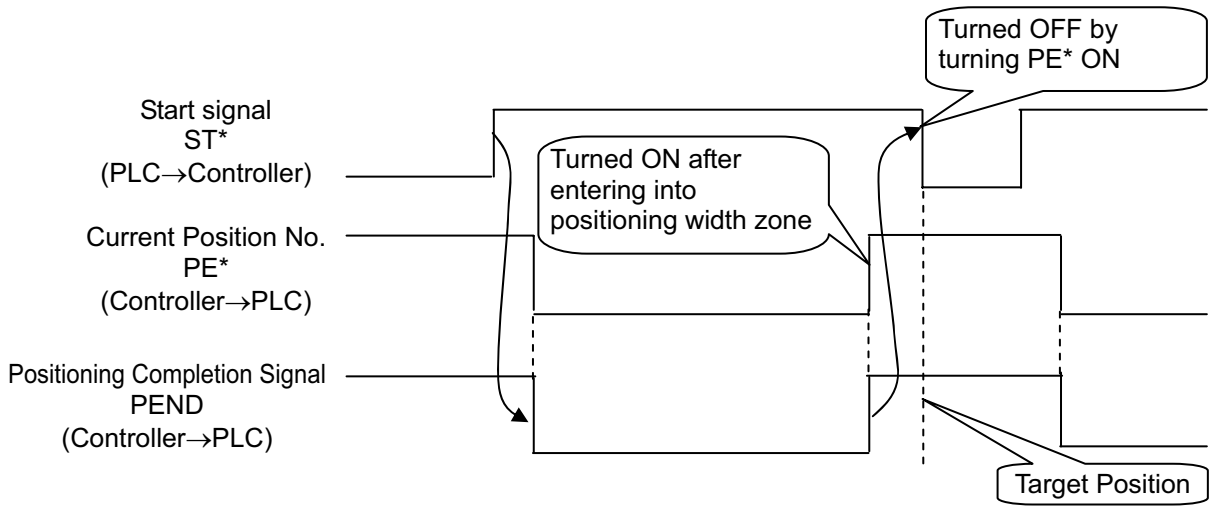

⚠ Caution: (1) If the ST* signal is turned ON for the position after completion of positioning, both the PE* and PEND signals remain ON (except the pitch feed operation).
(2) Both the PE* and PEND signals are set to ON in the positioning width zone. Accordingly, they may be turned ON under operation of the actuator if a large positioning width is set.
(3) Interlock should be taken so that two or more ST* signals are set to ON simultaneously.
1) Entering the ST* signal of another position during positioning is invalid. If the ST* signal of another position is turned ON during positioning, the operation is terminated after the completion of the positioning being operated.
2) Entering the ST* signal of another position with the ST* signal of the current position remaining ON after the completion of positioning allows the positioning to the other position to be executed.
(4) If Parameter No.27 “Move command type” is set to “0” (factory setting), turning ST* OFF during positioning caused the operation to be interrupted.

(2) Pitch Feeding (relative movement = incremental feed)

■ Sample use

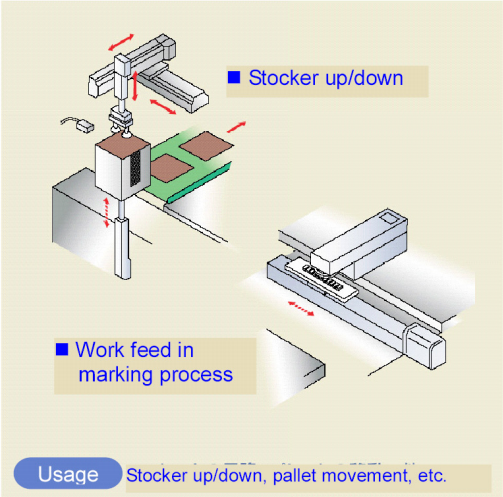

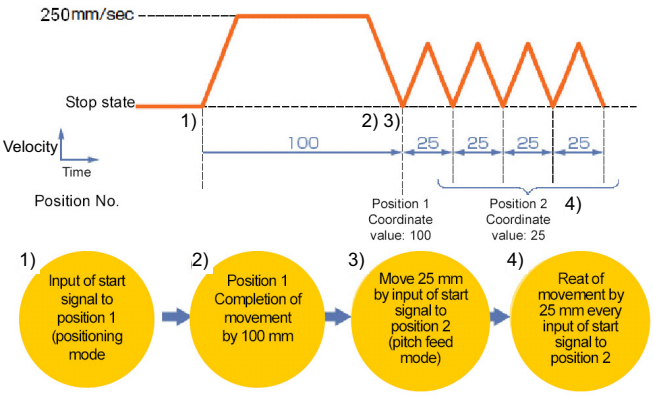

No.	Position [mm]	Velocity [mm/s]	Accele-ration [G]	Decele-ration [G]	Pressing [%]	Thresh-old [%]	Positioning width [mm]	Zone+ [mm]	Zone- [mm]	Acceleration/ Deceleration mode	Incre-mental	Transported load	Stop mode
0													
1	100.00	250.00	0.20	0.20	0	0	0.10	0.00	0.00	0	0	0	0
2	25.00	250.00	0.20	0.20	0	0	0.10	0.00	0.00	0	1	0	0

(Position No.2 sets pitch feed.)

■ Control method

1) The method of controlling pitch feed is the same as that described in (1) Positioning except the setting of the position table. Repeat the positioning of a specific position No.
2) For pitch feed, the position set in the position table indicates the pitch. Set the pitch (relative moving distance = incremental moving distance) in column “Position”.
3) If the operation command is issued, the actuator moves from the current stop position by “Position” in the position table. To perform continuous movement, repeat the operation. Any accumulation error does not occur because the home position (coordinate value 0) is specified as the base point.

⚠ Caution:

(1) Because pitch feed is repeated, turning ON the ST* signal of the same position after completion of positioning causes both the PE* and PEND signals to be turned OFF at operation start and turned ON again at completion of positioning in the same way as (1) Positioning.

(2) If the actuator reaches the software limit (stroke end) in pitch feed, the actuator is decelerated to be stopped and current position No. PE* and positioning complete signal PEND are turned ON at the stop position.

(3) Both the PE* and PEND signals are set to ON in the positioning width zone. Accordingly, they may be turned ON under operation of the actuator if a large positioning width is set.

(4) Interlock should be taken so that two or more ST* signals are set to ON simultaneously.
   1) Entering the ST* signal of another position during positioning is invalid. If the ST* signal of another position is turned ON during positioning, the operation is terminated after the completion of the positioning being operated.
   2) Entering the ST* signal of another position with the ST* signal of the current position remaining ON after the completion of positioning allows the positioning to the other position to be executed.

(5) If Parameter No.27 “Move command type” is set to “0” (factory setting), turning ST* OFF during positioning caused the operation to be interrupted.

(6) Note that, when Parameter No.27 “Move command type” is set to “1”, starting (ST* ON) pitch feed repeatedly during pause causes the actuator to be moved successively by the number of starts. If this situation is supposed, cancel the remaining moving distance by turning reset signal RES ON in the pause state or take interlock so that start signals are not turned ON during pause.

(7) The pressing operation is enabled by using the pitch feed function.

(8) In the pitch feed, do not perform a command with a pitch smaller than the minimum encoder resolution (lead / encoder pulse number) or that less than positioning accuracy repeatability.
   There would be no deviation to occur even with the command because it is an operation command to the same position as the positioning complete condition, but the positioning control cannot be performed properly.

(3) Pressing operation

■ Sample use

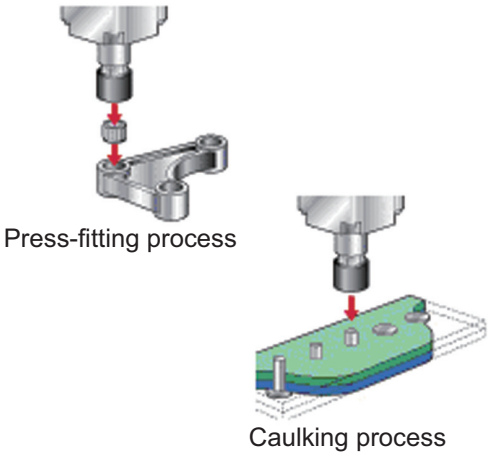

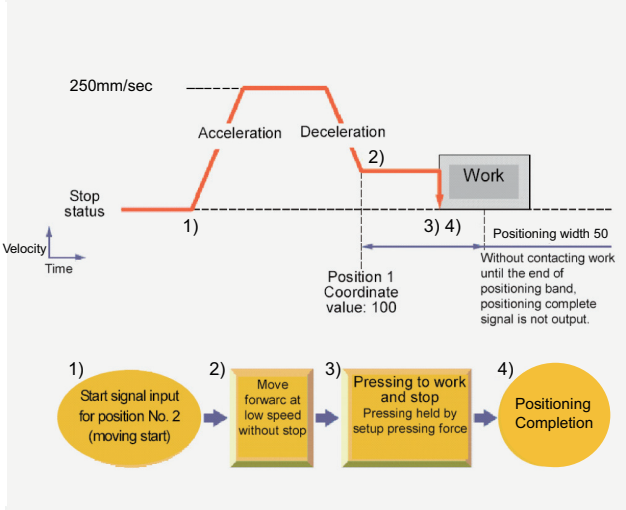

No.	Position [mm]	Velocity [mm/s]	Accele-ration [G]	Decele-ration [G]	Pressing [%]	Thresh-old [%]	Positioning width [mm]	Zone+ [mm]	Zone- [mm]	Acceleration/ Deceleration mode	Incre-mental	Transported load	Stop mode
0													
1	0.00	250.00	0.20	0.20	0	0	0.10	0.00	0.00	0	0	0	0
2	100.00	250.00	0.20	0.20	50	0	50.00	0.00	0.00	0	0	0	0

(Position No.2 sets pressing operation.)

■ Control method

1) The method of controlling the pressing operation is the same as that described in (1) Positioning except the setting of the position table. Any setting of “Pressing” in the position table allows the pressing operation to be done. “Positioning width” is assumed as pressing operation distance.
2) The actuator moves at the setting speed and rating torque to the position of the coordinate set in “Position” in the similar way as normal positioning. The operation is executed with the value set in “Positioning width” for the amount of movement in the pressing operation, and the torque (current limit) set in % in “Pressing” for the pressing operation as the upper limit.
3) The control method is the same as that in (1) Positioning. However, the processing of positioning complete signal PEND is different from that in (1) Positioning.
PEND is output when the shaft is stopped by pressing (pressing complete). If the work is not subject to pressing (miss-pressing), the actuator moves by the value set in “Positioning width” to stop but PEND is not turned ON. The current position No. PE* is turned ON at the completion of pressing and even in miss-pressing.

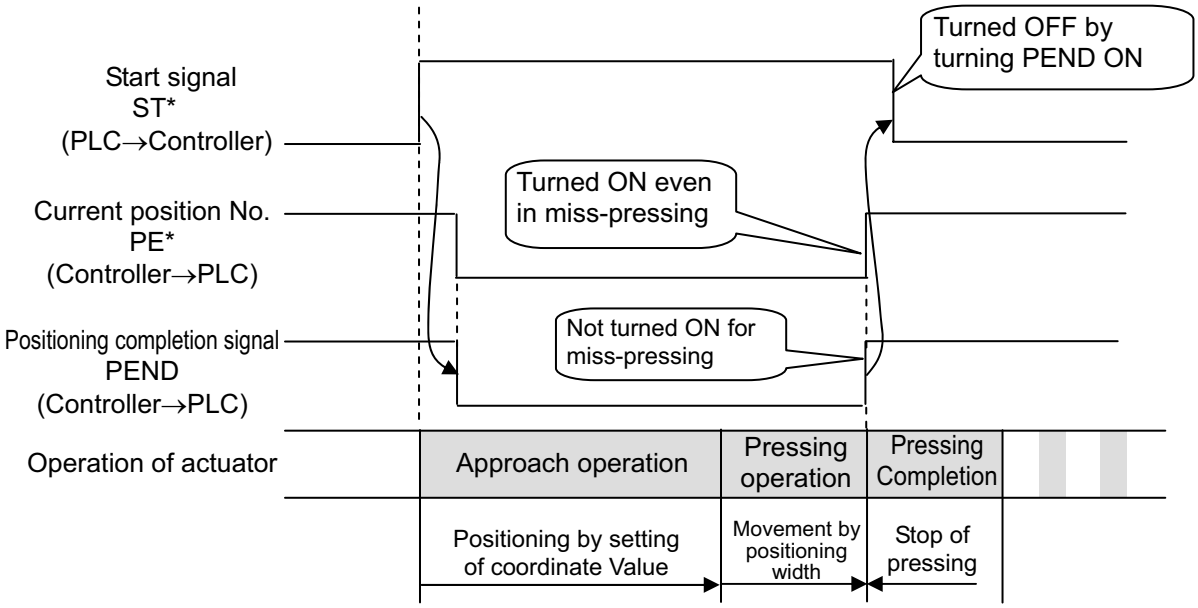

⚠ Caution: (1) The speed during pressing operation is set in Parameter No.34. The pressing operation speed is 20mm/s.
Do not set any value larger than the value in the list. If the speed setting in the position table is below this set value, pressing is performed with the set speed.

(2) The approach start position of pressing should be located at or before the pressing start position (coordinate 100mm or less in the above example) If not, the moving direction varies depending on the start position to be dangerous.
For example, pressing at coordinate larger than the pressing end position (larger than 150mm) is performed in the direction from the current position to the pressing end position. It would not proceed to the pressing operation at 150mm point after positioning at 100mm point.

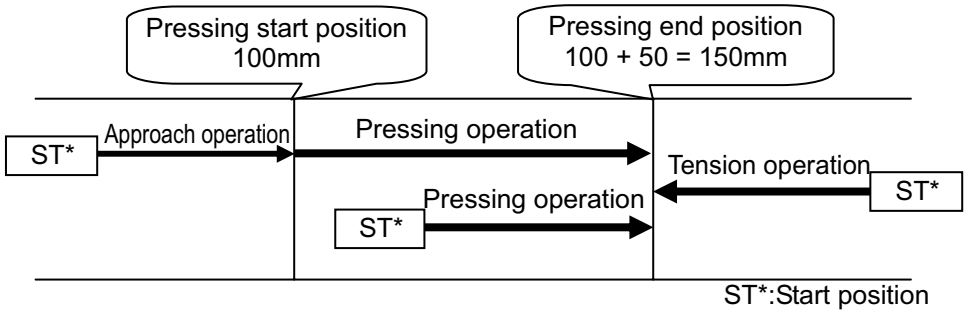

(3) The work is pressed after the pressing is completed. The work may moves backward or forward. If the actuator is moved backward before the approach position, alarm code 0DC “Pressing operation range over error” occurs to stop the actuator. In movement of the work in the pressing direction, PEND is turned OFF if the load current becomes lower than the current limit (pressing [%]). Miss-pressing occurs when the actuator moves by the pressing moving distance set in “Positioning width”.

(4) If the actuator gets pressed to the work during the approach operation, 0DC “Pressing operation range over error” would be issued.

Judging completion of pressing operation

The torque (current limit value) set in % in “Pressing” in the position table, and turns ON the pressing complete signal PEND when the load current reaches the following condition. PEND is turned ON at satisfaction of the condition if the work is not stopped. It is the same for PE*.

(Accumulated time in which current reaches pressing value [%]) – (accumulated time in which current is less than pressing value [%]) ≥ 255ms (Parameter No.6)

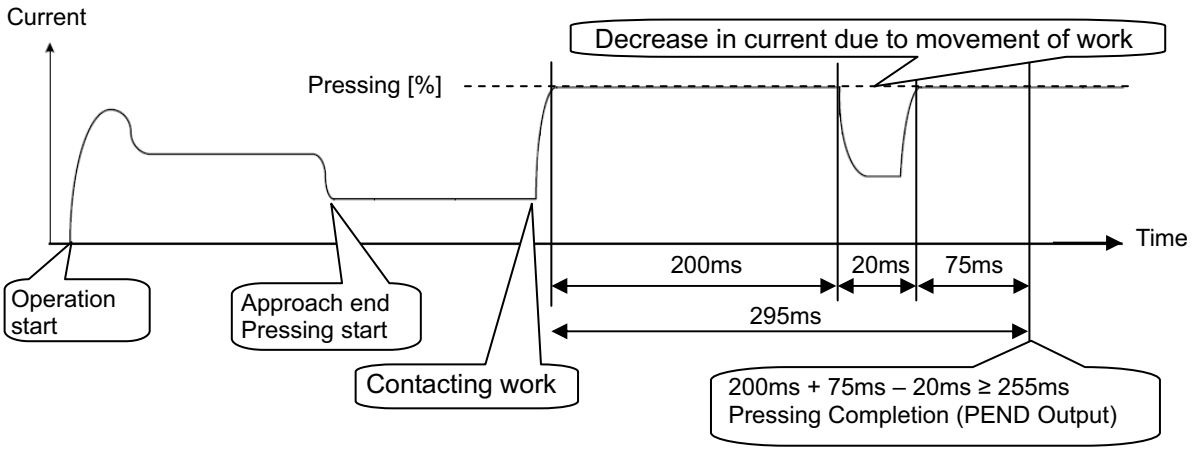

(4) Tension Operation

■ Image diagram

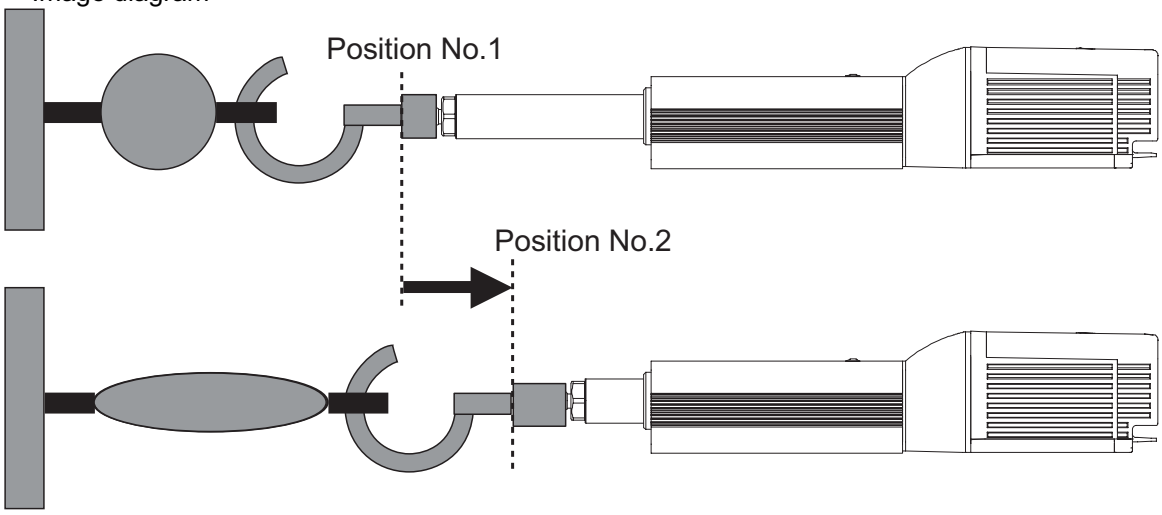

No.	Position [mm]	Velocity [mm/s]	Accele-ration [G]	Decele-ration [G]	Pressing [%]	Thresh-old [%]	Positioning width [mm]	Zone+ [mm]	Zone- [mm]	Acceleration/ Deceleration mode	Incre-mental	Transported load	Stop mode
0													
1	100.00	250.00	0.20	0.20	0	0	0.10	0.00	0.00	0	0	0	0
2	80.00	250.00	0.20	0.20	50	0	–50.00	0.00	0.00	0	0	0	0
3													

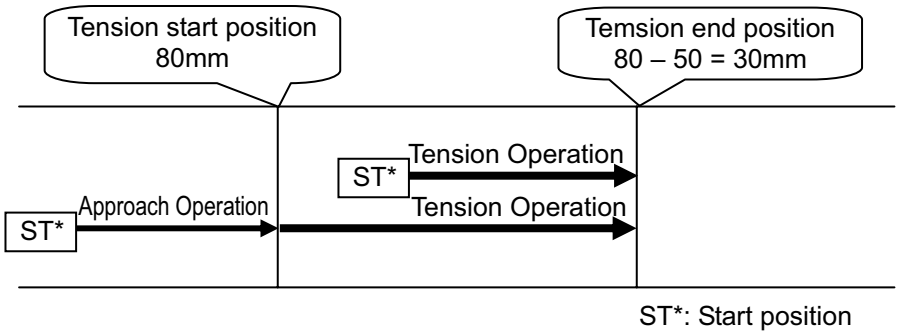

■ Control method

The control logic for the pulling operation of PIO converter is as same as the one for (3) Pressing operation. The control method is explained below by using the sample position table shown above.

1) Position No.2 indicates the settings of tension operation. The settings of “Position” and “Positioning width” show the tension start position and the tension quantity, respectively. Attach – (negative sign) to the tension quantity. Specify the upper limit of the torque required for tension in percent (limited current value) in “Pressing”. The speed, acceleration, and deceleration are the conditions of positioning to the coordinate value (80mm) set in “Position”.
2) Position No.1 indicates the tension start preparation position. Specify a value larger than the coordinate value at which the tension provided by position No.2 ends (80 – 50 = 30mm) in “Position”.

3) First define the positioning in position No.1. Next, the operation in position No.2 moves the actuator to the position of 80mm at the setting speed and rating torque and change to the tension operation. The actuator moves by 50mm in the negative direction in the tension operation. The upper limit of the tensile force is the torque set in percent.
4) In the similar way as pressing, the positioning complete signal is output when the shaft is stopped by tension (pressing complete). If the actuator cannot be stopped during movement within the setting positioning width (miss-pressing), it moves by the setting distance to stop but PEND is not turned ON. The current position No. PE* is turned ON at the completion of pressing and even in miss-pressing.

⚠ Caution: (1) The speed during tension operation is set in Parameter No.34. The pressing operation speed is 20mm/s.
Do not set any value larger than the value in the list. If the speed setting in the position table is below this set value, pressing is performed with the set speed.

(2) The tension ready position should be the tension start position or forward. If not, the moving direction varies depending on the start position to be dangerous.
The tension operation from a coordinate (less than 30mm = 80 – 50 in the above example) located before the end position (30mm) changes to the pressing operation from the current position to the tension end position. Note that the tension operation after positioning to the position of 80mm does not take place.

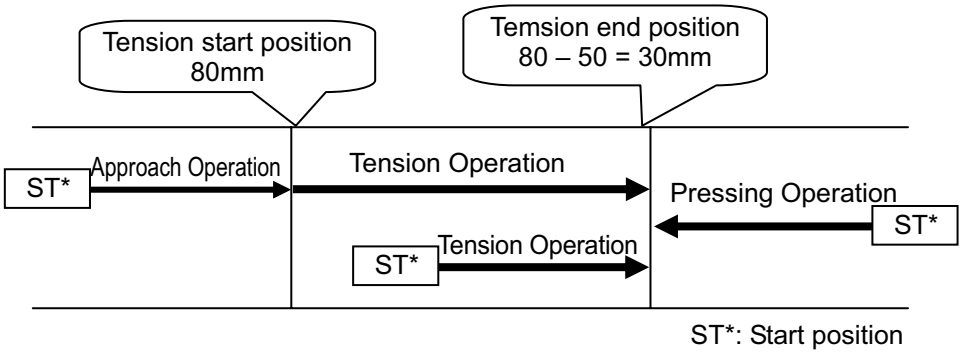

(3) The work is pulled also after completion of the tension. The work is drawn back or pulled further if the work is moved. When the work is drawn back before the approach position, alarm code 0DC “pressing operation range over error” occurs to stop the work. When the work is moved in the tension direction and the load current becomes less than the current limit value (pressing in percent), PEND is turned OFF. The work reaches the tension moving distance set in “Positioning width” to cause miss-pressing.

(5) Multi-step pressing

■ Image diagram

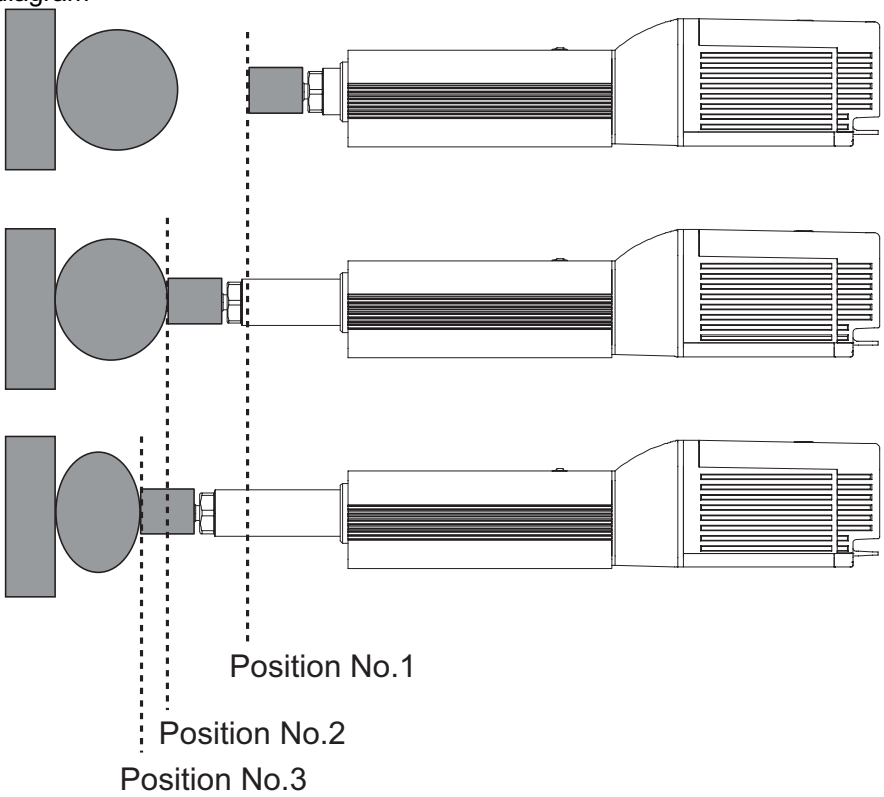

No.	Position [mm]	Velocity [mm/s]	Accele-ration [G]	Decele-ration [G]	Pressing [%]	Thresh-old [%]	Positioning width [mm]	Zone+ [mm]	Zone- [mm]	Acceleration/ Deceleration mode	Incre-mental	Transported load	Stop mode
0													
1	0.00	250.00	0.20	0.20	0	0	0.10	0.00	0.00	0	0	0	0
2	50.00	250.00	0.20	0.20	30	0	20.00	0.00	0.00	0	0	0	0
3	50.00	250.00	0.20	0.20	50	0	20.00	0.00	0.00	0	0	0	0
4													

■ Control method

For PIO converter, it is available to change only the pressing pressure after performing the pressing operation once and while keeping the pressing.
The method of controlling multi-step pressing is the same as that described in (3) Pressing operation.

1) Set the weak pressing (30%) in position No.2 and perform the pressing operation.
2) If pressing complete signal PEND is turned ON, start the pressing operation with pressing pressure (50%) greater than the first pressure set in position No.3.
   In this particular operation, turn ON ST3 after completion of ST2, and turn OFF ST2 when PEND is turned OFF. In usual case, do not turn ON two or more ST* signals simultaneously.
   The position data in position No.3 should be the same as that in position No.2 except the setting in “Pressing”.
3) To add a pressing step with another pressing pressure, add a sequence consisting of a position number and a pressing operation.

(6) Pause and Operation Interruption (ST*, *STP, RES, PE*, PEND)
Pause is possible during movement. In this mode, the following two methods are possible for pause.

1) Use of pause signal *STP
Turning reset signal RES ON during the pause allows the remaining moving distance to be cancelled to interrupt the operation.

2) Use of start signal ST*
This method is valid when Parameter No.27 “Move command type” is set to “0” (factory setting). The actuator can only be moved while the ST* signal is set to ON and stopped if ST* is turned OFF. Since setting the ST* signal to OFF is assumed as interrupt of operation, the remaining moving distance may not be cancelled.

I. Use of pause signal *STP

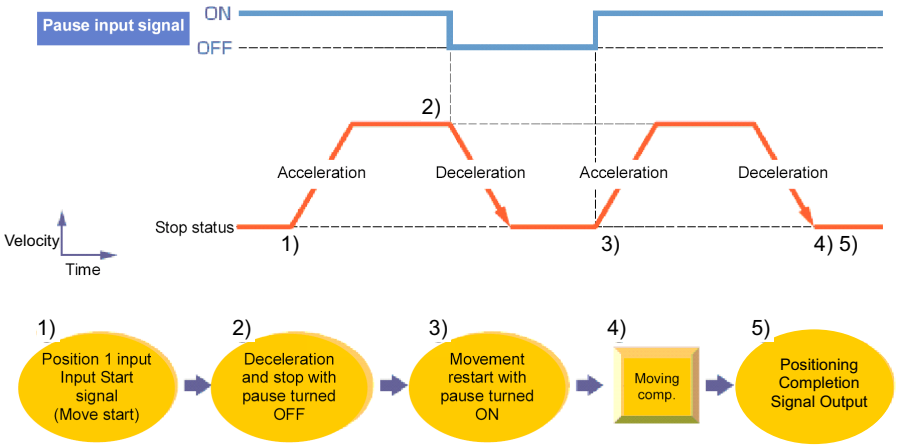

■ Control method
The pause signal is an input signal always set to ON. So, it is normally used to remain ON. Use this function for interlock in case where an object is invaded into the moving direction of the actuator being moved.

1) If pause signal *STP is turned OFF during operation of the actuator, the actuator is decelerated to a stop. The deceleration is defined by the value set in the position table.
2) During pause, current position No. PE* and positioning complete signal PEND are not turned ON.
3) If pause signal *STP is returned to ON, the actuator continues the remaining movement. The acceleration is the value set in the position table.
4) Turning reset signal RES ON during pause (*STP being OFF) allows the remaining movement to be canceled to interrupt the operation.

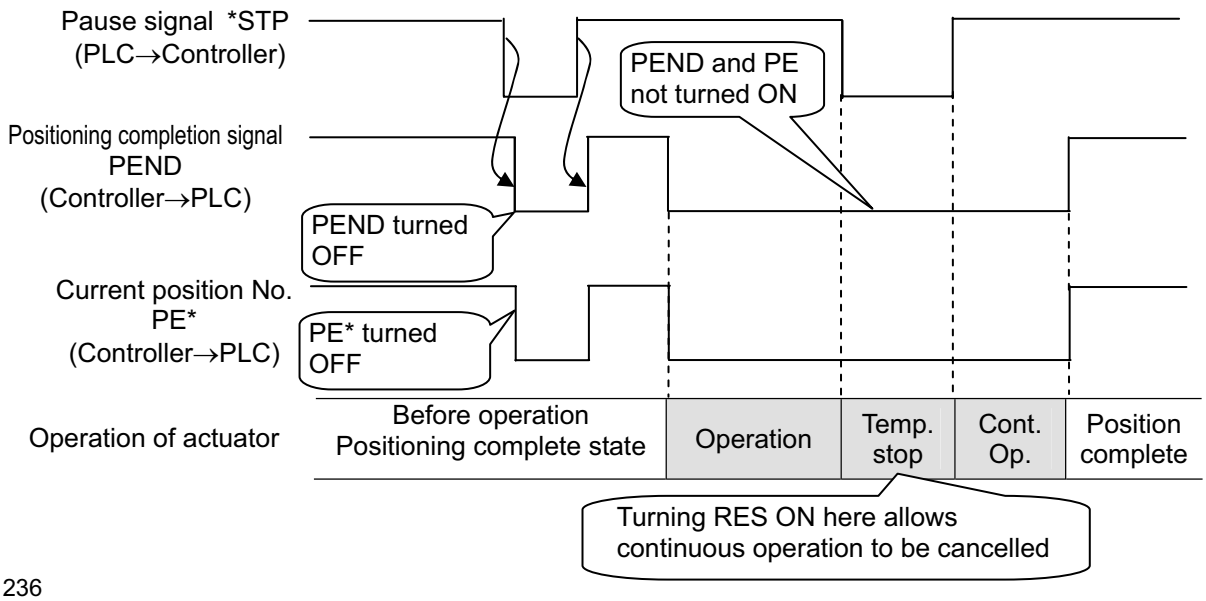

> ⚠ Caution: (1) At occurrence of an alarm in the release level[Note 1], RES can reset the alarm. Cancel the remaining moving distance after confirmation that alarm signal *ALM (being ON in normal state and OFF at occurrence of an alarm) is set to ON.
> Note 1: [Refer to 4.4 Alarm List for details of alarms.]
> (2) Turning *STP OFF with the actuator being in the positioning complete state causes PE* and PEND to be turned OFF. Note that this situation may not occur when a sequence program is created.

II. Use of start signal ST*

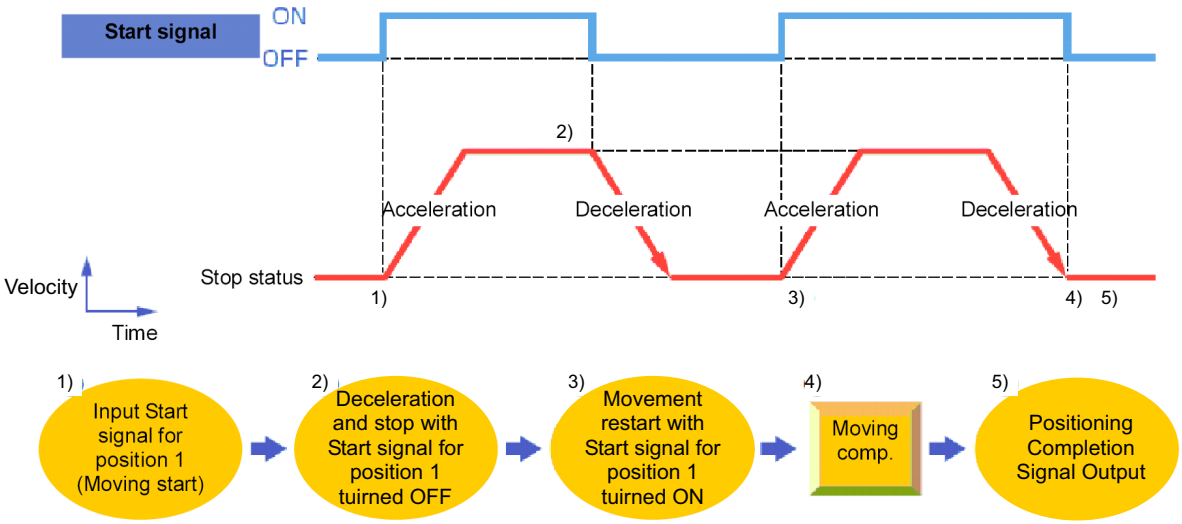

■ Control method

For PIO converter, it is available to pause the operation if turning OFF the start signal ST* during the operation.

Use the control method for interlock in case where an object is invaded into the moving direction of the actuator being moved.

1) If the ST* signal is turned OFF during movement, the actuator is paused. The deceleration is the value set in the position table.
2) Turning the ST* signal OFF causes the positioning to be interrupted and deemed complete signal PEND to be turned ON.
3) If the ST* signal is turned ON again, the remaining movement is continued. The acceleration is the value set in the position table.

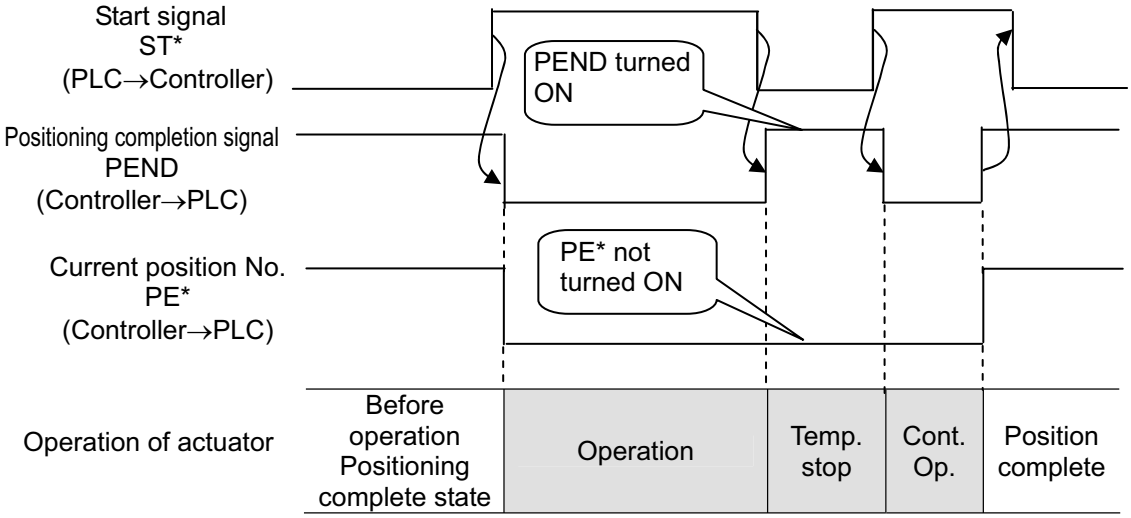

[8] Direct Position Specification (Solenoid Valve Mode 2) = Operations of PIO Pattern 5 in PIO Converter

The start signal is provided for every position number. By only turning ON the input signal corresponding to the 3-point positioning position, an operation becomes available with the data of the target position number. The operation mode is called the solenoid valve mode because solenoid valves can directly drive air cylinders. At invasion of the actuator into the positioning width set for each position, the output signal is turned ON in the operation of any position number or manual operation of the actuator in servo OFF status as if a sensor were installed.

Positioning and speed change during operation are possible. Their control methods are the same as those of other patterns.

⚠ Caution: This pattern does not allow pressing and pitch feed.

(1) Home return (ST0, HEND)

For PIO converter, the PIO input and output for the position numbers before the home return operation is changed as shown below;

Position No.	Input	Output
0	ST0	LS0
1	ST1 ⇒ JOG+	LS1
2	ST2 ⇒ Disable	LS2 ⇒ Disable

After a home-return operation, while the start signal ST0 is ON, home-return operation and the start signal ST1 work as the function of JOG+. By using this function, move the actuator to a position at which home return can be done safely. The speed of ST1 is the home return speed. After the home return is fully prepared, turn the ST0 signal ON to start the home return. At the completion of the home return, home return complete signal HEND is turned ON. Turn the ST0 signal OFF if HEND is turned ON. HEND remains ON unless the home is lose due to occurrence of an alarm.
If a certain home positioning precision is required, Set “Position” of position No.0 to 0 mm and the ST0 signal is not changed by the HEND signal to remain ON. After the home return is completed, positioning is provided for position No.0. [Refer to (3) Positioning in this section.]

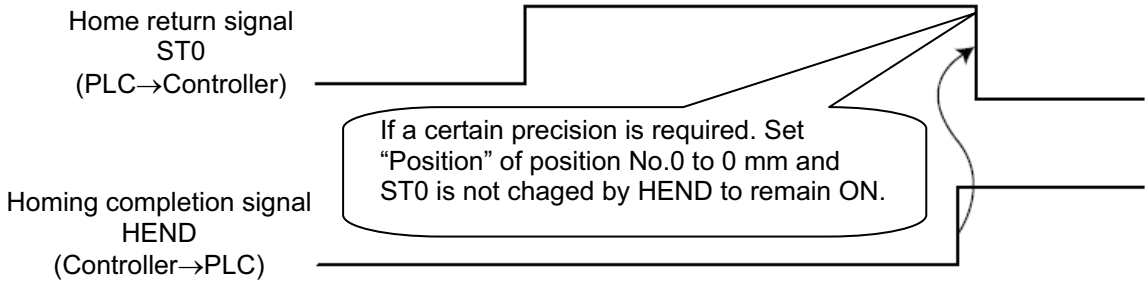

⚠ Warning: (1) Use this pattern with Parameter No.27 “Move command type” set to “0” (factory setting). When Parameter No.27 is set to “1”, the home return is started as soon as the ST0 signal is turned ON and the operation cannot be stopped even if ST0 is turned OFF.
(2) If “Position” in position No.0 is set to other than 0mm, the operation is continued without change to provide positioning after home return.

[Operation of Slider Type/Rod Type Actuator]

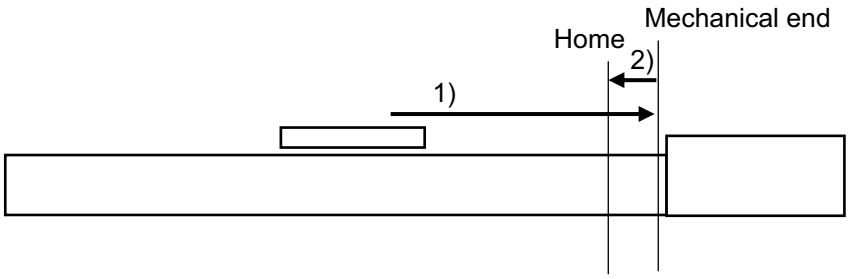

1) With the ST0 signal being ON, the actuator moves toward the mechanical end at the home return speed.
   The movement speed is 20mm/s.
2) The actuator is turned at the mechanical end and stopped at the home position. The moving distance is the value set by Parameter No.22 “Home return offset level”.

> ⚠ Caution: In the home reverse specification, the actuator moves in the reverse direction. Make sure to refer to 6.3.1 [2] (15) when a change to Parameter No.22 “Home return offset level” is required.

(2) Features of LS signals (LS0 to 2)

The LS* signals are not complete signals for positioning commands such as those for other PIO patterns. Despite the specified position No., the corresponding LS* signal is turned ON when the actuator is entered into the setup value range as if the actuator were detected by a sensor installed.

(Example) The figure below shows the position table and the position at which each of the LS signals is turned ON. If the actuator passes any of the positioning widths in the operation by another position number or manual operation in the servo OFF state, the relevant LS signal is always turned ON.

No.	Position [mm]	Velocity [mm/s]	Accele-ration [G]	Decele-ration [G]	Pressing [%]	Thresh-old [%]	Positioning width [mm]	Zone+ [mm]	Zone- [mm]	Acceleration/ Deceleration mode	Incre-mental	Transported load	Stop mode
0	0.00	250.00	0.20	0.20	0	0	5.00	0.00	0.00	0	0	0	0
1	70.00	250.00	0.20	0.20	0	0	10.00	0.00	0.00	0	0	0	0
2	150.00	250.00	0.20	0.20	0	0	5.00	0.00	0.00	0	0	0	0

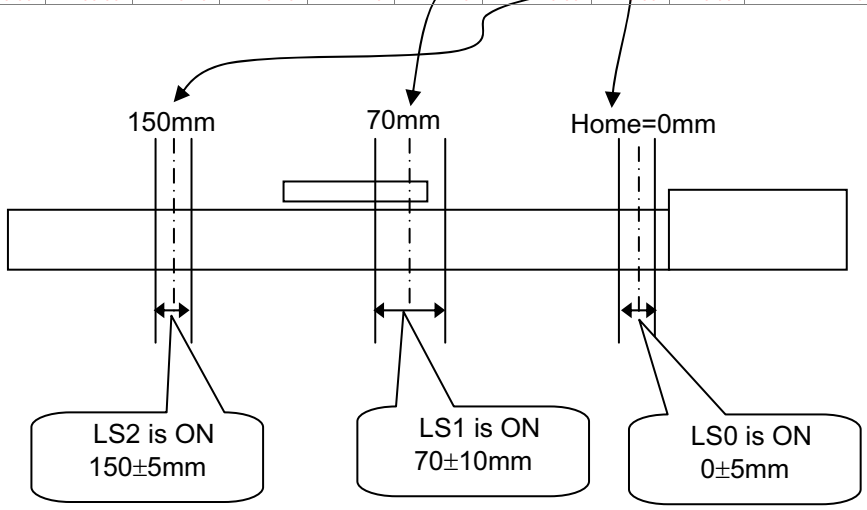

> ⚠ Caution: LS* signal would not be output if the positioning width is set less than the minimum resolution.

(3) Positioning [Basic] (ST0 to ST2, LS0 to LS2)

Position No.	Input	Output
0	ST0	LS0
1	ST1	LS1
2	ST2	LS2

[Caution] Pressing and pitch feed are unavailable.

■ Sample use

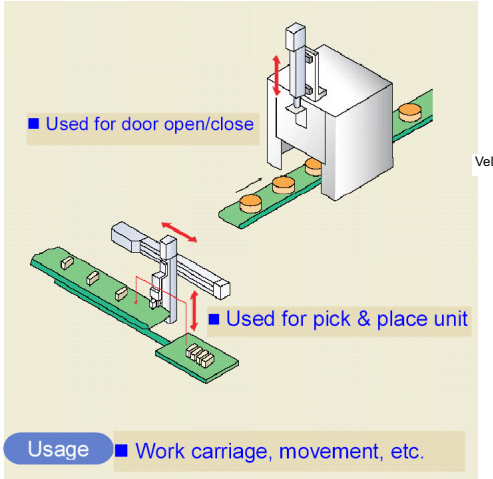

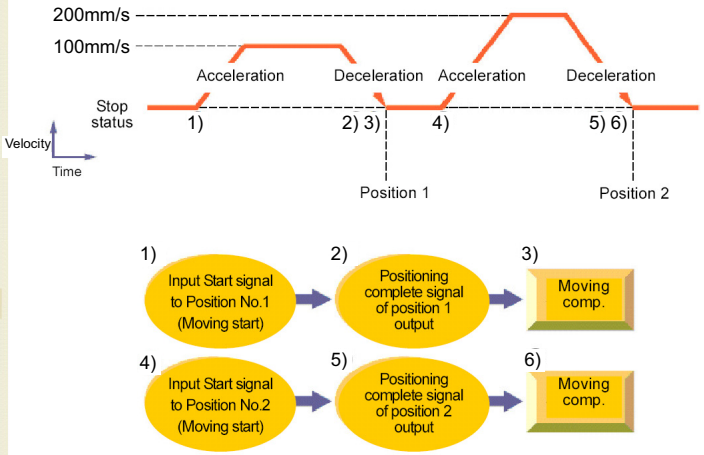

No.	Position [mm]	Velocity [mm/s]	Accele-ration [G]	Decele-ration [G]	Pressing [%]	Thresh-old [%]	Positioning width [mm]	Zone+ [mm]	Zone- [mm]	Acceleration/ Deceleration mode	Incre-mental	Transported load	Stop mode
0	0.00	100.00	0.20	0.20	0	0	0.10	0.00	0.00	0	0	0	0
1	70.00	100.00	0.20	0.20	0	0	0.10	0.00	0.00	0	0	0	0
2	150.00	200.00	0.20	0.20	0	0	0.10	0.00	0.00	0	0	0	0

■ Control method

1) When start signal ST* is turned ON, the actuator starts acceleration based on the data in the specified position table for positioning to the target position. Turning the ST* signal OFF on the way causes the actuator to be decelerated and stopped. So, make the ST* signal remain ON until the actuator reaches the target position.
2) At the completion of positioning, position detection output LS* of the specified position is turned ON.
3) Position detection output LS* is turned ON if the remaining moving distance enters into the positioning width. LS* is set to ON if the current position is located within the positioning width zone or OFF if the current position is located out of the positioning width zone (the same situation occurs in the servo OFF status).
4) Leave the ST* signal to be ON until the actuator is moved to another position and turn OFF it at the next ST* signal. If the ST* signal is turned OFF at the LS* signal, the actuator is decelerated to a stop in the positioning width and thus the actuator may not reach the target position. In continuous operation, turn ON the next ST* signal by setting the positioning width within the required precision range or setting the period taken from detection of the LS* signal to reaching the target position.

(Example) Repetition of ST1 → ST2 → ST1 →
Insert timer Δt if necessary.

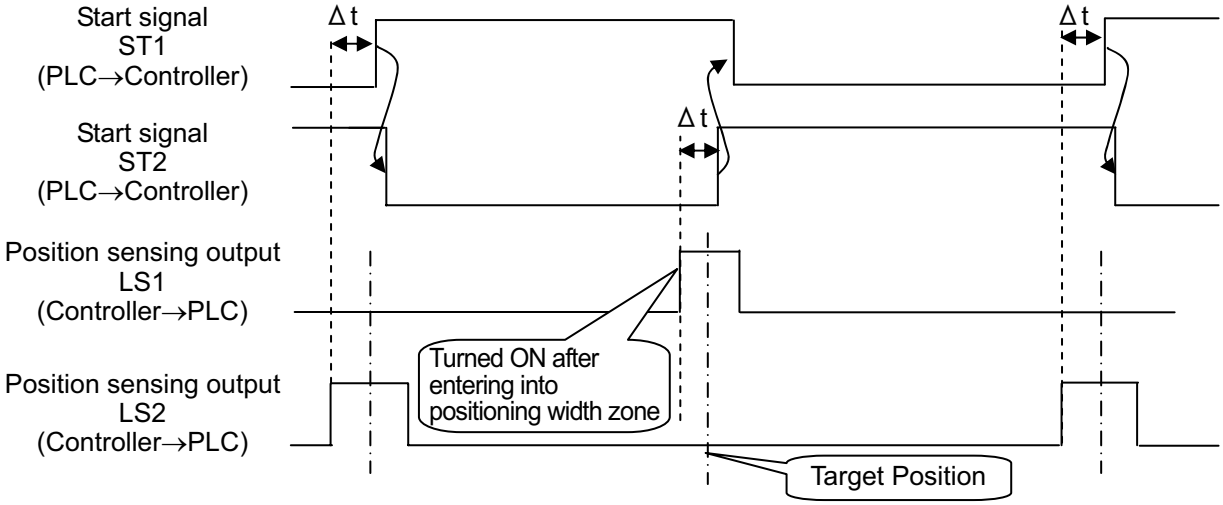

Δt : Time required to certainly reach the target position after the position sensing output LS1 or 2 is turned ON.

[Example of stop position when the ST* signal is turned OFF by the LS* signal]
If the positioning width is set at a position before the original deceleration start position, the actuator cannot reach the target position.

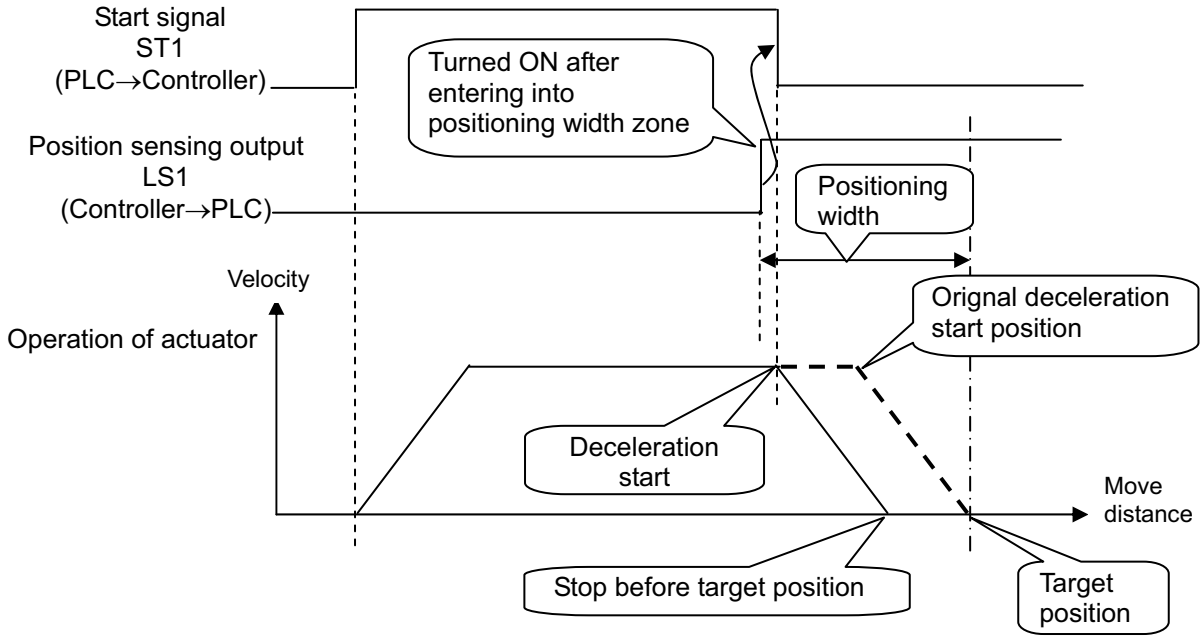

⚠ Caution:
(1) If the ST* signal for the position is turned ON after the completion of positioning, the LS* signal remains ON.
(2) The LS* signal is set to ON in the positioning width zone. Accordingly, they may be turned ON under operation of the actuator if a large positioning width is set.
(3) Interlock should be taken so that two or more ST* signals are set to ON simultaneously. If two or more ST* signals are input simultaneously, they will be executed according to the following priorities: ST0→ST1→ST2.
(4) LS* signal would not be output if the positioning width is set less than the minimum resolution.

(4) Speed change during the movement

■ Sample use

■ Liquid injection unit

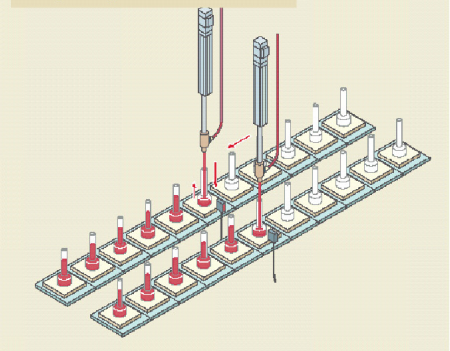

The unit inserts nozzles into containers, injects liquid, and moves the nozzles upward so that they may not be contact with the liquid surfaces.

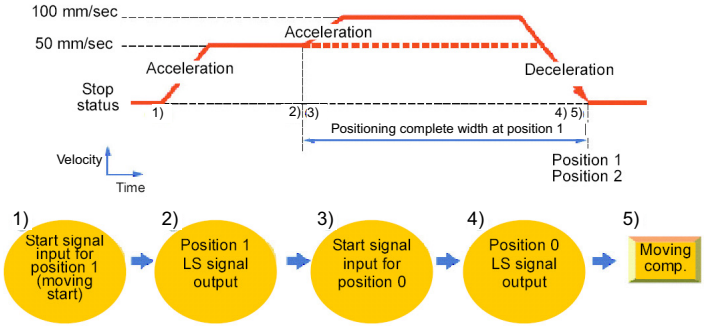

No.	Position [mm]	Velicoty [mm/s]	Accele-ration [G]	Decele-ration [G]	Pressing [%]	Thresh-old [%]	Positioning width [mm]	Zone+ [mm]	Zone- [mm]	Acceleration/ Deceleration mode	Incre-mental	Transported load	Stop mode
0	0.00	100.00	0.20	0.20	0	0	0.10	0.00	0.00	0	0	0	0
1	0.00	50.00	0.20	0.20	0	0	100.00	0.00	0.00	0	0	0	0
2	150.00	200.00	0.20	0.20	0	0	0.10	0.00	0.00	0	0	0	0

■ Control method

The speed of the actuator can be changed while it moves. The operation control method is the same as that in (3) Positioning. This pattern prioritizes the start signal specified later over the previous signal. Accordingly if another position No. is started during operation, then the new operation begins. This can be used to change the speed.

1) In this example, the speed is changed while the actuator moves from the position of 150mm to the position of 0mm. At first, set the positioning to the target position at the first speed in position No.1. In the positioning width, set the distance from the speed change position to the target position. The value is set to 100mm in the example. Thus, for position No.1, position sensing signal LS1 is turned ON at the position before the target position by 100mm.
2) Set the positioning to the target position at the second speed in position No.0.
3) Then start position No.1 (ST1 signal) and use position sensing output signal LS1 of position No.1 to start position No.0 (ST0 signal). Since this pattern prioritizes the signal specified later over the previous signal, the operation of No.1 is changed to the operation of No.0 during the operation of No.1.
4) Use position sensing signal LS0 of position No.0 to turn the ST1 signal OFF.

In this example, the target positions No.0 and 1 are equal with each other. They may not be the same. However, setting the target positions to be equal with each other allows the distance from the speed change position to the target position to be known easily.
Depending on the timing when the actuator accepts the input signal, the speed change may be delayed a little. Changing the positioning width can adjust the timing.

The timing chart shown below indicates that the actuator changes its speed while it moves to position No.1 after the completion of positioning at position No.2 and moves to position No.0.

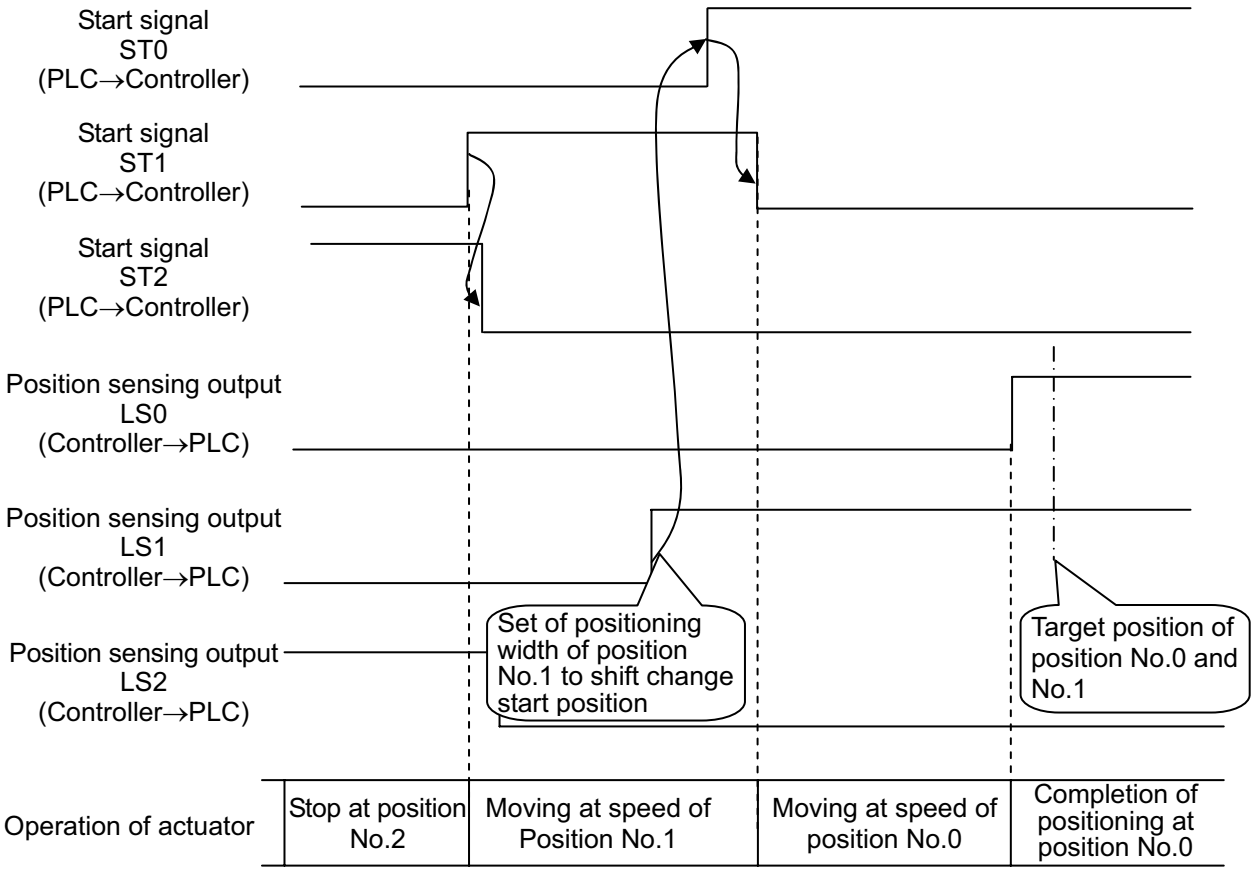

(5) Pause and Operation Interruption (ST*, LS*)

Turning start signal ST* OFF allows the actuator to be paused while it is moved. To restart it, turn the same ST* signal ON.

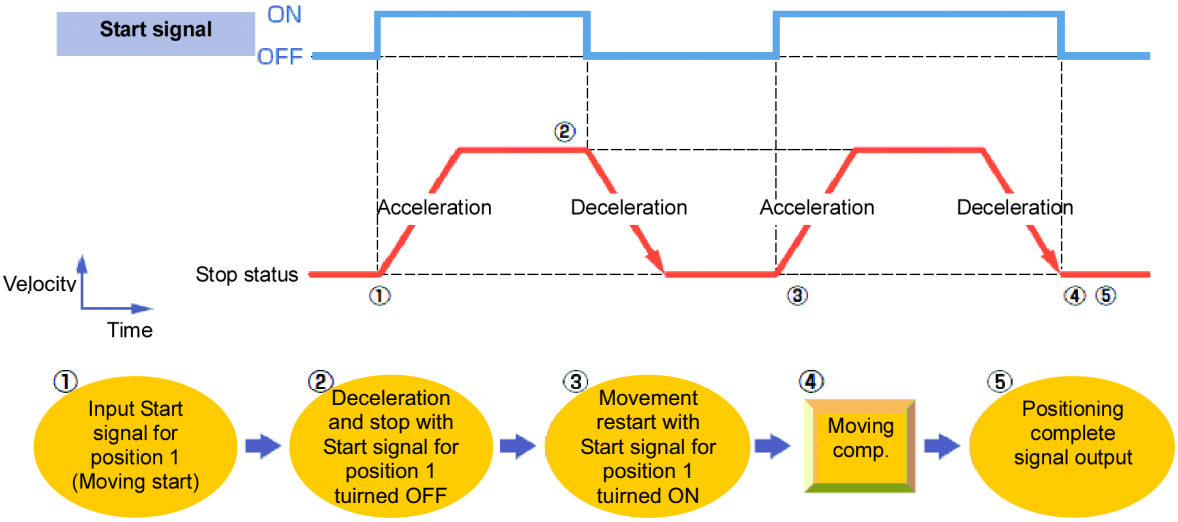

■ Control method

If start signal ST* is turned OFF during movement, the actuator can be paused.
Use the control method for interlock in case where an object is invaded into the moving direction of the actuator being moved.

1) If the ST* signal is turned OFF during movement, the actuator is decelerated to a stop. The deceleration is the value set in the position table.
2) If the ST* signal is turned ON again, the remaining movement is continued. The acceleration is the value set in the position table.

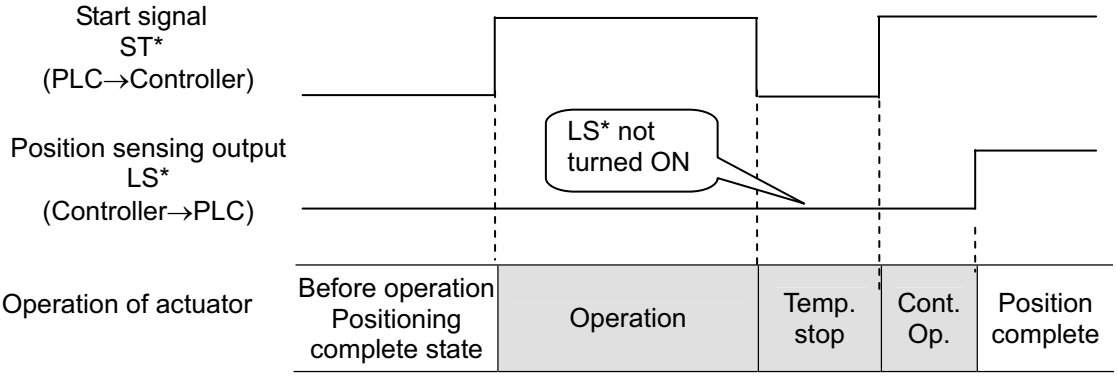

4.3 Operation in Pulse Train Control Mode (How to Operate Pulse Train Control Type)

In Pulse Train Mode, the actuator can be operated by the pulse train output of the host controller (PLC) positioning control function.
An operation in Pulse Train Control Mode is available when ERC3 is the pulse train control type (model code: PLN/PLP).
It is available to select 2 types of PIO patterns with different supportive functions by parameters. This operation mode is not to be changed after the system is complete to be established or during an operation. Select the PIO pattern considering the system operation specifications in advance and design the wiring layout and operational sequence.

⚠ Caution: In Pulse Train Control Mode, the operation is performed corresponding to the input pulse.

Input Pulse Value ⇒ Moving distance
Input pulse frequency ⇒ Velocity
Change in Input Pulse Frequency ⇒ Velocity change and acceleration/deceleration

Do not use the actuator above the specifications for the commands of the movement amount, acceleration and deceleration from the host controller (PLC). Doing so may cause an abnormal noise or malfunction.

[1] Guideline for PIO Pattern Selection and Supportive Functions

○ : Valid function

PIO Pattern (Parameter No.25)		0	1
Mode		Positioning mode	Pressing mode
Supportive Function	Dedicated home return signal	○	○
	Brake control function	○	○
	Torque limiting function		○
	Position-command primary filter function	○	○

[2] Guideline for Supportive Functions

Function	Description
Dedicated home return signal	When this function (signal) is used, home return can be performed without using a complex sequence or an external sensor, etc.
Brake control function	Since the controller controls the brake, there is no need to program a separate sequence.
Torque limiting function	The torque can be limited (a desired limit can be set by a parameter) using an external signal. When the torque reaches the specified level, a signal will be output. This function (signal) permits pressing and press fitting operations.
Position-command primary filter function	Soft start and stop can be achieved even when the actuator is operated in the command-pulse input mode where acceleration and deceleration are not considered.

[3] Power Supply and Emergency Stop Release (CP, MP, EMG)
[Refer to 3.2.3 Circuit Diagram]

1) Supply the control power (CP, CP_GND), first.
2) Secondly, turn ON the motor power source (MP, MP_GND) and the emergency stop signal EMG at the same time. Do not attempt to turn ON the emergency stop signal EMG prior to the motor power source.
   Controller can be available for an operation by the emergency stop signal EMG being turned ON.
3) When the emergency stop signal EMG turns OFF, the servo is turned OFF if it is ON. Cut the motor power supply (MP, MP_GND) OFF at the same time. Do not attempt to cut the motor power supply (MP, MP_GND) OFF before the emergency stop signal EMG is turned OFF.
   If the servo turns OFF, the positioning complete signal INP is turned OFF. If the actuator is equipped with a brake, the brake gets in the operational condition.

[4] Brake Release BK [Refer to 3.2.3 Circuit Diagram]

This is a signal to compulsorily release the brake of the actuator equipped with a brake.
The brake in the actuator is a non-excitation operation type electromagnetic brake. In a normal operation, it automatically releases the brake with the servo ON and gets to the brake operating status with the servo OFF.
There may be a case that the brake needs to be released to move the slider or rod manually by hand when installing the unit to the system or having a direct teach[*1]. In such cases, turn this signal ON. The brake can be released while signal is turned ON.

*1 Direct teach : This operation is intended to get coordinate values to the position by moving the slider and/or the rod by hand.

⚠ Warning:
(1) Take sufficient care to release the brake. Inappropriate brake release may cause people to be injured and/or the actuator, the work and/or the machine to be damaged.
(2) After the brake is released, always make the brake applied again. Any operation with the brake remaining released is extremely dangerous. The slider or rod may drop to cause people to be injured and/or the actuator, the work and/or the machine to be damaged.
(3) Make certain that this signal is turned OFF (brake is activated) when the power is supplied to the controller. Leaving the power ON may cause a drop of the slider or rod, results in an injury or damage of the actuator unit, work piece or devices.

[5] Time Constant for Control Signal Input

The input signals of this controller incorporate an input time constant to prevent malfunction due to chattering, noise, etc. Make sure to input the signals continuously for 6ms or more.

(Note) Command pulse train inputs (PP•/PP, NP•/NP) do not have input time constants. Also, it is necessary to input 16ms or more for CSTP Signal.

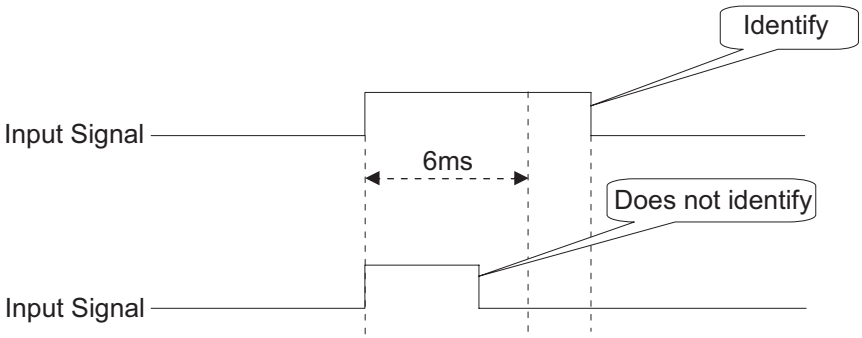

[6] Operation Ready and Auxiliary Signals

(1) Servo ON (SON, SV, INP)

PIO signal	Input	Output	
	SON	SV	INP

1) Servo ON signal SON is the input signal making the servo motor of the actuator operable.
2) If the servo-on is performed to enable operation, the SV output signal is turned ON. Concurrently positioning completion signal INP is turned ON.
3) With the power being supplied, then controller cannot be operated while the SV signal remains OFF. If the SON signal is turned OFF under operation of the actuator, the actuator is decelerated and stopped with the maximam torque. After the stop, the servo OFF occurs to enter the motor into the free running state.
   If the actuator is equipped with a brake, the brake gets in the operational condition. The brake (option) is of release-in-excitation type. Therefore, making the servo ON will release the brake while making it OFF will lock the brake.
   If the deviation clear is set to valid (setting: 0, setting at delivery: 1 = invalid) in Parameter No.58 at this time, the deviation counter gets reset.

● Servo OFF status

1. Once the actuator stops, no retaining torque will be supplied.
2. The pulse train input, HOME (home return signal), TL (torque-limiting selection signal) and CSTP (external forced stop signal) are all ignored.
3. Output signals SV (ready signal), HEND (home return complete signal) and TLR (torque limiting signal) are all cleared (turned OFF).
4. INP (Positioning Completion Signal)
   The INP (Positioning Completion Signal) is OFF when the servo is OFF.

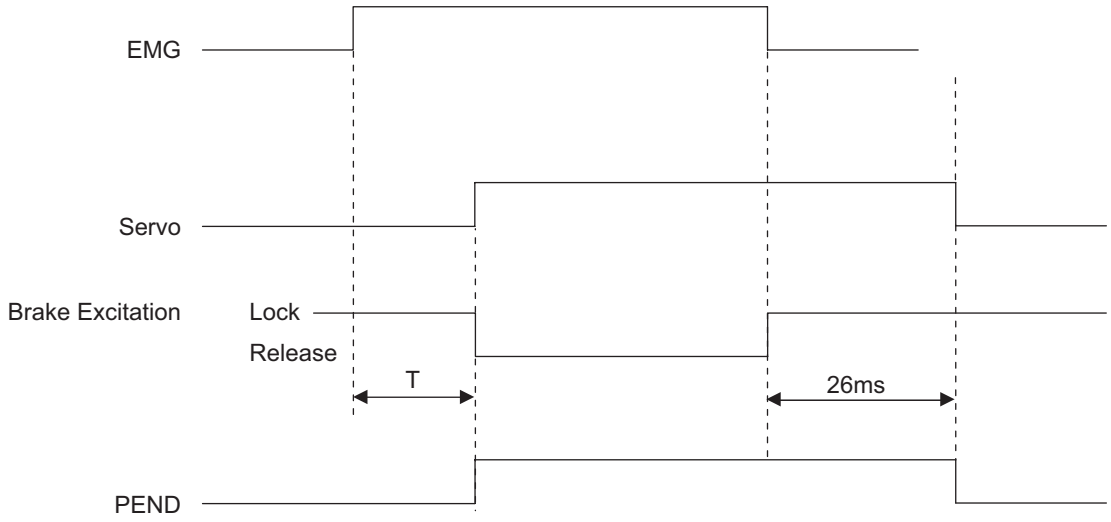

T (before detecting excitation) = SON signal identification (6ms) + Excitation detection time (T1 + T2) × Number of retry (10 times Max.) + Servo ON delay time (T3)
T (after detecting excitation) = SON signal identification (6ms) + Servo ON delay time (T3)

T1 : Parameter No.30 It differs depending on the setting of excitation detection type.
Set Value = 0 → 160ms
Set Value = 1, 2 → 220ms
T2 : Parameter No.29 Setting of excitation phase signal detection time
It is set to 10ms in the initial setting.
T3 : Fixed to 20ms

(Note) Excitation detection operation of the motor is conducted at the first servo-on after the power is turned ON.

(2) Home Return (HOME, HEND)

PIO signal	Input	Output
	HOME	HEND

The HOME signal is intended for automatic home return.
When the HOME signal is turned ON, the command will be processed at the leading edge (ON edge) of the signal and the actuator will perform home return operation automatically.
Once the home return is completed, the HEND (home return completion) signal will turn ON.
Set the home (enter “0”) in the current value register of the host controller (PLC) using the current value preset function, etc., when the HOME signal turns ON.

⚠ Caution:
(1) The HOME signal is given priority over any pulse train command. Even when the actuator is moving with a pulse train command, it will start home return once the HOME signal is turned ON.
(2) The HOME signal is processed only at the leading edge (ON edge) of the signal.
(3) If the SON signal is turned OFF or an alarm is detected during home return, the home return operation will stop. If the servo is turned OFF, the home return command will be cancelled even when the HOME signal remains ON. To perform home return again, therefore, turn the HOME signal OFF and then turn it ON again.
(4) The actuator can be operated without using this function. If this function is not used, however, management of position data will solely be dependent on the host controller (monitoring soft stroke limit is effective in the home return complete status). Therefore, take the necessary measures to prevent an over-stroke, such as not sending pulse commands with travel distances exceeding the effective stroke or providing external limit switches for stroke end detection, etc., to forcibly stop the actuator.
(5) By turning the servo OFF or having the deviation counter cleared, HEND turns OFF. Perform home return again.

[Operation of Actuator]

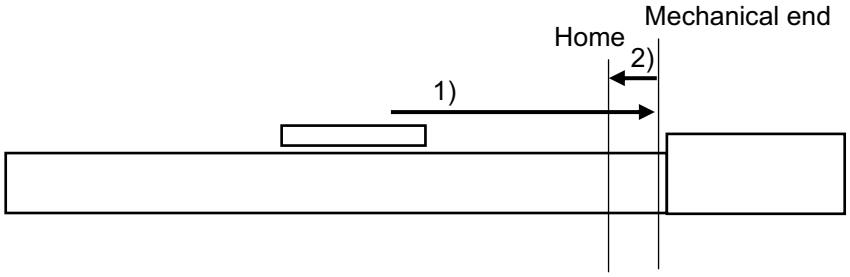

1) With the HOME signal being ON, the actuator moves toward the mechanical end at the home return speed.
The movement speed is 20mm/s.
2) The actuator is turned at the mechanical end and stopped at the home position. The moving distance is the value set by Parameter No.22 “Home return offset level”.

⚠ Caution: In the home reverse specification, the actuator moves in the reverse direction. Make sure to refer to 6.3.1 [2] (15) when a change to Parameter No.22 “Home return offset level” is required.

(3) Alarm, Alarm Reset (*ALM, RES)

PIO signal	Input	Output
	RES	*ALM

1) Alarm signal *ALM is set to ON in the normal status but turned OFF at the occurrence of an alarm (Note 1) at a level equal to or higher than the operation release level.
2) Turning reset signal RES ON under occurrence of an alarm at the operation release level allows the alarm to be released. The action is taken at the rising edge (ON edge).

Note 1 Check the Chapter 7 Troubleshooting for details of alarms.

⚠ Caution: The alarm reset should be done after the cause of the alarm is confirmed and removed. If alarm reset and restart are repeated many times without removal of the cause, a severe failure such as motor burnout may occur.

[7] Pulse Train Input Operation

(1) Command Pulse Input (PP•/PP, NP•/NP)

In the differential type, it is able to have 200kpps of pulse train input at maximum. If the host controller is an open collector pulse output type, it is able to input the pulse of 60kpps at the maximum by connecting AK-04 (option).
6 types of command pulse train can be selected. Set the pulse train format in Parameter No.63 and active high/low in Parameter No.64. [Refer to 4.3 [8] Settings of Basic Parameters Required for Operation]

> ⚠ Caution:
> (1) The directions in which the actuator moves upon receiving forward and reverse pulses conform to the "pulse count direction" set in Parameter No.62.
> (2) As for the forward/reverse directions, pay attention to the host controller setting or PP•/PP and NP•/NP connections.
> (3) Set the actuator acceleration/deceleration on the host controller side.
> (4) The actuator acceleration/deceleration should not exceed the rated acceleration/deceleration of the applicable actuator. [Refer to 1.2.1 Actuator.]
> * The rotating direction of the motor is defined so that the CCW direction as viewed from the end of the load shaft represents the forward direction. (For a standard type actuator, the move is to the motor end.)

	Command Pulse String Mode	Input Terminal	In Normal Rotation	In Reverse Rotation
Negative Logic	Normal Rotation Pulse String	PP•/PP		
	Reverse Rotation Pulse String	NP•/NP		
	The normal rotation pulse string shows the motor rotation amount in normal direction, and reverse rotation pulse string shows the motor rotation amount in reverse direction.			
	Pulse Train	PP•/PP		
	Symbol	NP•/NP	Low	High
	The command pulse shows the motor rotation amount and the command symbol shows the rotation direction.			
	A/B Phase Pulse String	PP•/PP		
		NP•/NP		
	It is the pulse input of A/B-phase of 90° phase difference multiplied by 4, and indication of the amount and the direction of revolution.			
Positive Logic	Normal Rotation Pulse String	PP•/PP		
	Reverse Rotation Pulse String	NP•/NP		
	Pulse Train	PP•/PP		
	Symbol	NP•/NP	High	Low
	A/B Phase Pulse String	PP•/PP		
		NP•/NP		

[Reference] Acceleration/deceleration settings of general positioning device

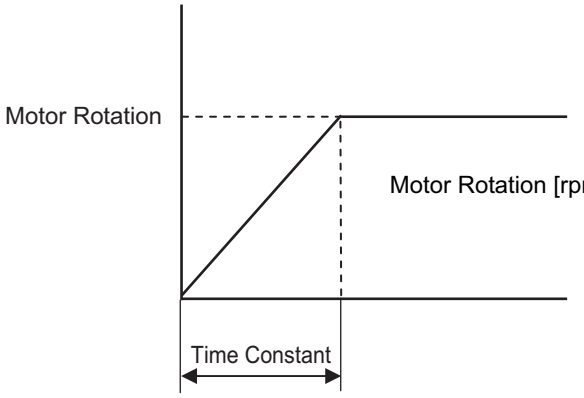

$$\text{Motor Rotation [rpm]} = \frac{\text{Velocity [mm/s]}}{\text{Ball Screw • Lead Length [mm/rev]}} \times 60$$

1G = 9800mm/s^2 : Acceleration capable to accelerate up to 9800mm/s per second
0.3G : Acceleration capable to accelerate up to 9800mm/s × 0.3 = 2940mm/s per second

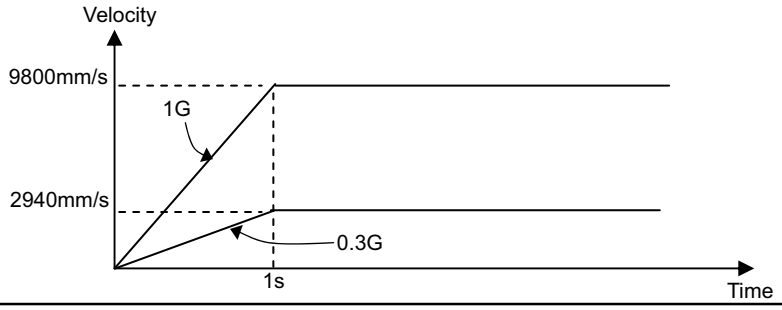

⚠ Caution:
- Set the acceleration/deceleration speed not to exceed the maximum acceleration/deceleration speed of the actuator. An operation with exceeding condition may cause a malfunction.
- Consider the electric gear ratio of the host side and that of the controller side via the following calculation.

(2) Position complete INP

PIO signal	Output
	INP

This signal will turn ON when the remaining travel pulses (accumulated pulses) on the deviation counter enters the positioning width.
When the servo is ON, this signal turns ON when the accumulated pulses on the deviation counter are within the number of pulses set in Parameter No.10 “Default positioning width”.
This signal is OFF while the servo is OFF.

⚠ Caution:
- This signal will turn ON when the servo turns ON (because positioning is executed at the current position where the servo is ON).
- Since this signal turns ON only with the deviation (servo lag pulses), it could turn ON even during an operation (even if positioning is not completed) when operating in low speed and getting into the positioning width range if the setting of Parameter No.10 “Positioning width initial setting” is too wide. Also, even when the deviation is in this range, the signal turns OFF when there is a change to the command pulse in 1ms. Therefore, if operating with a command of 1kpps or less, INP may repeatedly turn ON and OFF.

(3) Torque Limit Select (TL, TLR)

PIO signal	Input	Output
	TL	INP→TLR

(Note) TLR is the function available only in Pattern 1.

The torque limit signal TL is a signal that limits the torque for the motor. While this signal is ON, the actuator thrust can (motor torque) can be limited at the torque that was set in Parameter No.57 “Torque limit”.
While TL Signal is ON, the positioning complete signal INP becomes the torque limiting signal TLR and turns ON when the motor torque gets to the torque limit value set in Parameter No.57.
The TL signal is disabled during home return or forced stop.

⚠ Caution:
- Do not turn the TL signal OFF while the TLR signal is ON.
  Large deviation (servo lag pulses) may be created while in torque limit (TL Signal is ON). (For example, the actuator may receive a load just like it receive a pressing force in pressing operation and therefore become no longer operable). If TL Signal is turned OFF under this condition, the operation may be started with the maximum torque at the same time, and make a sudden move. After turning TLR signal ON, perform an operation in the reversed way to confirm TLR signal turns OFF. If the condition is difficult for the reversed movement, turn the servo OFF or clear the deviation counter (by turning DCLR ON).

(4) Deviation Counter Clear DCLR

PIO signal	Input
	RES→DCLR

It is a function that can be selected only in Pattern 1

This is the signal to clear the deviation counter that stores the specified pulse until its process is completely finished (positioning is completed) once a command pulse is input.
While TL Signal is ON, the reset signal RES becomes the deviation counter clear signal DCLR.
It is used when the deviation is desired to be cleared after the pressing by TL signal is complete (TLR signal ON). Once the deviation is cleared, TLR signal turns OFF and the condition can be made as it is positioned at the point where the pressing is complete.

⚠ Caution: DCLR signal is a signal that is processed at the startup (ON edge). Therefore, input the pulse train while DCLR signal is on and the actuator will operate. Turn this signal ON only when the deviation counter is to be cleared.

[8] Settings of Basic Parameters Required for Operation

It is a mandatory parameter to perform an operation.
The parameters listed in the table below may only be set if the actuator performs only positioning operation.

Parameter No.	Parameter Name	Details
65	Electronic Gear Numerator	This parameter determines the unit travel distance of the actuator per command pulse train input 1 pulse.
66	Electronic Gear Denominator	
63	Command Pulse Mode	Specifies the command pulse train input mode.
64	Command Pulse Mode Input Polarity	Sets the type of active high/low of the specified pulse train

(1) Electronic Gear Setting
This parameter determines the unit travel distance of the actuator per command pulse train input 1 pulse.

User Parameter No.65/66 Electronic Gear Numerator/Denominator

Name	Symbol	Unit	Input Range	Initial Value (For reference)
Electronic Gear Numerator	CNUM	–	1 to 4096	2048
Electronic Gear Denominator	CDEN	–	1 to 4096	125

Determine the movement amount and calculate value for the electronic gear setting by following the formula below:
Linear Axis Unit Travel Distance = Min. Travel Distance Unit (1, 0.1, 0.01mm etc.) / pulse
Rotary Axis Unit Travel Distance = Min. Travel Distance Unit (1, 0.1, 0.01deg. etc.) / pulse

■ Electronic Gear Formula:
In the case of Linear Axis

$$\frac{\text{Electronic Gear Numerator (CNUM)}}{\text{Electronic Gear Denominator (CDEN)}} = \frac{\text{No. of Encoder Pulses}^{(\text{Note 1})}\ \text{[pulse/rev]}}{\text{Actuator Lead Length [mm/rev]}} \times \text{Unit Travel Distance [mm/pulse]}$$

Note 1 The encoder pulse of ERC3 is 800pulse/rev.

■ Formula for velocity:
The velocity of the actuator can be figured out with the following formula.
Velocity = Unit Travel Distance × Input Pulse Frequency [Hz]

■ Examples of electronic gear calculations:
When operating ERC3 with 3mm lead length ball screw in 0.01 (1/100) mm of the movement per unit
(Encoder pulse of ERC3 = 800pulse/rev)

$$\frac{\text{Electronic Gear Numerator (CNUM)}}{\text{Electronic Gear Denominator (CDEN)}} = \frac{\text{No. of Encoder Pluses [pulse/rev]}}{\text{Ball Screw Lead Length [mm/rev]}} \times \text{Unit Travel Distance [deg/pulse]}$$

$$= \frac{800}{3} \times \frac{1}{100} = \frac{8}{3}$$

The electronic gear numerator (CNUM) is calculated as 8, while the electronic gear denominator (CDEN) is calculated as 3. Based on these settings, the travel distance per command pulse train input pulse becomes 0.01mm.

⚠ Caution:

- The fraction has to be completely reduced so both the electric gear numerator (CNUM) and electric gear denominator (CDEN) can be 4096 or less and make them to be integral numbers. (Do not stop reducing the fraction on the way.)
- CNUM and CDEN on the line axis have to satisfy the following relative formulas.

$$2^{31} \geq \frac{\text{Stroke Length [mm]}}{\text{Ball Screw Lead Length [mm/rev]}} \times \text{No. of Encoder Pluses [pulse]} \times \text{CNUM}$$

$$2^{31} \geq \frac{\text{Stroke Length [mm]}}{\text{Ball Screw Lead Length [mm/rev]}} \times \text{No. of Encoder Pluses [pulse]} \times \text{CDEM}$$

- Do not set the minimum movement unit out of the encoder resolution ability. If this setting is conducted, the actuator would not start moving until enough command pulse is stored in the encoder resolution error.

$$\text{Encoder resolution [mm/pulse]} = \frac{\text{Ball Screw Lead Length [mm/rev]}}{\text{No. of Encoder Pluses [pulse/rev]}}$$

- Pay attention not to exceed the specification limit when setting the velocity, acceleration and deceleration.

(2) Format Settings of Command Pulse Train

Set the command pulse train format in Parameter No.63 and active high/low in No.64.

I. Command Pulse Mode

User Parameter No.63 “Command Pulse Input Mode”

Name	Symbol	Unit	Input Range	Initial Value
Command Pulse Input Mode	CPMD	–	0 to 2	1

Command Pulse Train Mode		Input Terminal	In Normal Rotation	In Reverse Rotation	Setting Value of Parameter No. 63
Negative Logic	Normal Rotation Pulse Train	PP•/PP	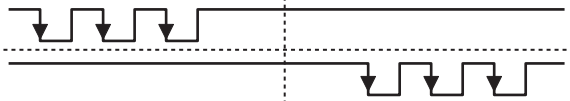		2
	Reverse Rotation Pulse Train	NP•/NP			
	The normal rotation pulse train shows the motor rotation amount in normal direction, and reverse rotation pulse train shows the motor rotation amount in reverse direction.				
	Pulse Train	PP•/PP	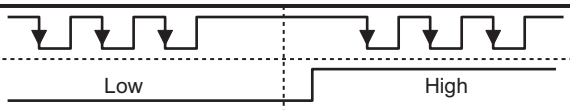		1
	Symbol	NP•/NP	Low	High	
	The command pulse shows the motor rotation amount and the command symbol shows the rotation direction.				
	A/B Phase Pulse Train	PP•/PP	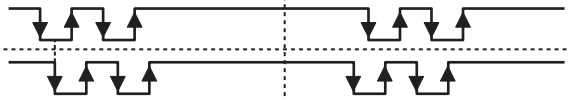		0
		NP•/NP			
	The A/B Phase 4-fold Pulse with the phase difference of 90° shows the commands for the rotation amount and direction.				
Positive Logic	Normal Rotation Pulse Train	PP•/PP	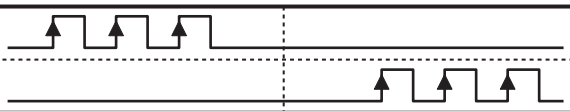		2
	Reverse Rotation Pulse Train	NP•/NP			
	Pulse Train	PP•/PP	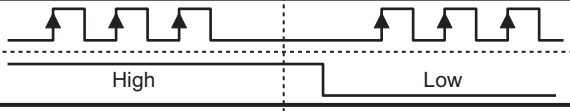		1
	Symbol	NP•/NP	High	Low	
	A/B Phase Pulse Train	PP•/PP	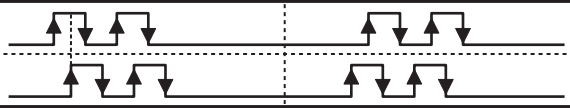		0
		NP•/NP			

II. Command Pulse Mode Input Polarity

User Parameter No.64 “Command Pulse Input Mode Polarity”

Name	Symbol	Unit	Input Range	Initial Value
Command Pulse Input Mode Polarity	CPMD	–	0 to 1	0

Set Value

Positive logic : 0

Negative logic : 1

⚠ Caution: Pay attention not to exceed the specification limit when setting the velocity, acceleration and deceleration.

[9] Parameter Settings Required for Advanced Operations

Depending on systems and/or loads, set the following parameters if necessary.

(1) Position command primary filter time constant

No.	Name	Symbol	Unit	Input Range	Initial Value
55	Position command primary filter time constant	PLPF	msec	0.0 to 100.0	0.0

The acceleration/deceleration of the actuator can be set in S-shaped curve with this parameter setting. (It is not the S-shaped acceleration/deceleration function.)
If command pulse train is input at a certain frequency, the actuator is accelerated/decelerated slowly depending on the time constant.
The actuator moves by the number of command pulses.
Even if the host controller (PLC etc.) has no acceleration/deceleration function or the frequency of command pulses varies rapidly, the actuator can be accelerated/decelerated smoothly.
The delay in positioning stabilizing time requires approximately 3 times longer than the set value after the command pulse input stop. If the set value is 100ms, the stabilizing time would be approximately 300ms.

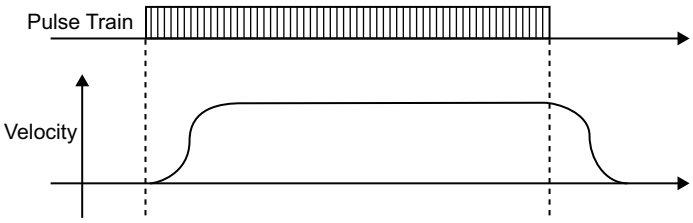

(2) Torque Limit

No.	Name	Symbol	Unit	Input Range	Initial Value
57	Torque Limit	TQLM	%	0 to 70	70

Set a desired torque limit used in the torque limit input signal TL, which is an external input signal.
Set the torque in % to the rated thrust (rated current).
[Refer to 1.2.1 [6] Current Limit Value and Pressing Force]
When the torque limit signal TL of the external input signal is turned ON, current limitation corresponding to the setting is applied.
When the torque current of the motor reaches the set value, the torque limiting signal TLR of the external output signal is output.

(3) Clearing deviation during servo OFF or alarm stop

No.	Name	Symbol	Unit	Input Range	Initial Value
58	Clearing deviation during servo OFF or alarm stop	FSTP	–	0 to 1	1

It can be selected whether to valid or invalid the deviation clear at the servo-off or an alarm stop.
0: Disable
1: Enable

(4) Error monitor during torque limiting

No.	Name	Symbol	Unit	Input Range	Initial Value
59	Error monitor during torque limiting	FSTP	–	0 to 1	0

Selection can be made whether to enable/disable the motoring of the deviation during torque limiting (condition of TL signal being ON).
If it is set enabled, error can be issued when the deviation exceeds the specified value while in torque limiting.
0: Disable
1: Enable

(5) Deviation Counter Clear Input

No.	Name	Symbol	Unit	Input Range	Initial Value
60	Deviation Counter Clear Input	FPIO	–	0 to 1	0

Selection can be made whether to enable/disable the deviation counter clear signal DCLR.
0: Enable
1: Disable

(6) Torque limit command input

No.	Name	Symbol	Unit	Input Range	Initial Value
61	Torque limit command input	FPIO	–	0 to 1	0

Torque control of the motor with the value set in Parameter No.57 Torque Control Value can be performed with PIO (TL Signal ON) from the host system. In this parameter, a choice can be made from using (activated) TL Signal (Torque Limiting Signal) and not using (deactivated) the signal.
If selected to be invalid, TL Signal (torque limit signal) becomes invalid.
0: Enable
1: Disable

(7) Pulse count direction

No.	Name	Symbol	Unit	Input Range	Initial Value
62	Pulse count direction	FPIO	–	0 to 1	Set individually

You can set the direction in which the motor turns according to command pulses.
0: Forward rotation
1: Reverse rotation

4.4 Operation in MEC Mode 1 and 2 (Operation with PLC)

There are two types of operation modes in MEC Mode, 2-point stop and 3-point stop, and 2-point stop performs the same operation as of Single Solenoid while 3-point stop possesses a function of intermediate stop in addition to the operation same as that of Double Solenoid. ERC3 is controlled with PIO directly in MEC Mode 1 and via PIO Converter in MEC Mode 2, however, the operation method is the same for both modes. MEC Mode 2 is applicable for Simple Absolute Type.

In this mode, Quick Teach can be used.
These teaching tools listed below are also able to be used.
(1) MEC PC Software
(2) Touch Panel Teaching

[1] Outline for Operation Patterns and Functions

The settings for the operation patterns and operational conditions are to be established in a teaching tool. For the details, refer to each instruction manual.

Operation Pattern		Overview
Stopping at 2 points (2-point positioning)	[Single-solenoid mode] Movement by 1 input between 2 points	Air cylinder can perform a 2-point movement with the control same as when operating Single Solenoid. You can set the positions of the end point and start point. You can specify the moving speed and acceleration/deceleration.
Stopping at 3 points (3-point positioning)	[Double-solenoid mode] Movement by 2 input between 2 points	Air cylinder can perform a 2-point movement with the control same as when operating Double Solenoid. You can set the positions of the end point and start point. You can set the position of an intermediate point and perform positioning to the intermediate point. You can specify the moving speed and acceleration/deceleration.
	[3-point positioning] Movement by 2 input between 3 points	

[2] Table for Operational Conditions (Position Table) and Positioning Complete Signal

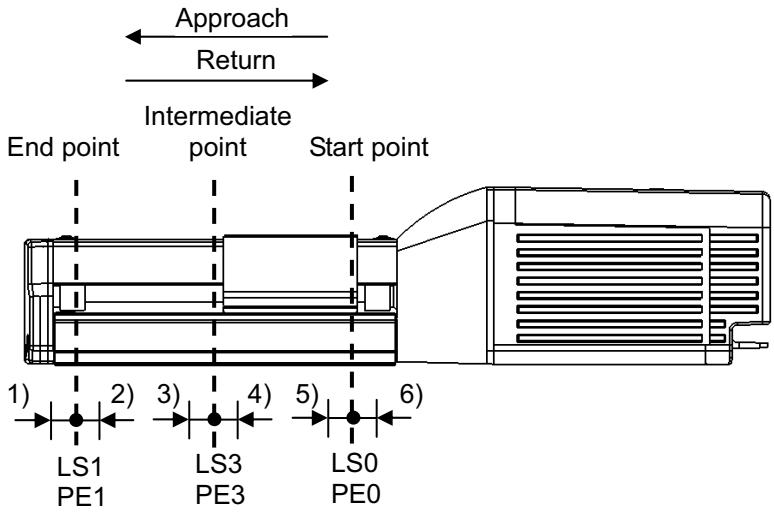

1) to 6) = Parameter No.1 (Positioning width)

■ Operation Condition Table (Position Table)

Used PIO (input and output) Signal		Stop position Note 2	1)	2)	3)	4)	5)	6)	7)
2-point stop	3-point stop		Position [mm]	Speed [mm/s]	Acceleration [G]	Deceleration [G]	Push force [%]	Push width [mm]	Energy-Saving Function
——— ST0 Note 1	ST0	Start point (Forward)	10.00	50.00	0.1	0.1	0	0	Enabled
–	ST0, ST1	Intermediate point (Intermediate)	50.00	50.00	0.1	0.1	70	1.00	Enabled
ST0 Note 1	ST1	End point (Backward)	100.00	50.00	0.1	0.1	0	0	Enabled

Note 1 ST0 for 2-point stop is end point move when it is ON, and start point move when OFF.
Note 2 The start point of SEP-PT is expressed as “Backward End Position”, end point as “Forward End Position” and intermediate point as “Intermediate Position”.

■ Position Detection Output and Positioning Complete Signal

Content of the output signal is determined by the setting of the operation pattern (whether to use the pressing operation).

Signal Name			Contents of Signals	Function
Pressing Function	Not used	LS0	Start Point Detection	The same operation as of the sensor of the air cylinder is performed. Turns ON when the current position is in the range of positioning band to each target position set in Parameter No. 1. (Refer to the figure below.)
		LS1	End Point Detection	
		LS2	Intermediate Point Detection	
	Use	PE0	Start Point Positioning Complete	It turns ON when the pressing or the positioning is complete. (It also turns ON even with a miss-operation.) It turns OFF with a movement signal to another point.
		PE1	End Point Positioning Complete	
		PE2	Intermediate Point Positioning Complete	
HEND			Home Return Completion	This signal is turned ON when the home return operation is completed. This signal will not exist when 3-point stop (3-point positioning) is selected as the operation pattern.

1) Position [mm] ·····It is the positioning stop point. The position from the origin is to be set. The positions must satisfy the following relationships: Start point < Intermediate point < End point

2) Speed [mm/s] ·····Set the velocity in the operation.
Do not attempt to input a value more than the maximum velocity or minimum velocity (Note 1).
(Note 1) For the minimum speed, you can either check in "1.2.1 Actuator" or figure out from the formula below.
Min. Speed [mm/s] = Lead Length [mm] / No. of Encoder Pluses / 0.001 [s]

3) Acceleration [G]·····Set the acceleration for the startup.

4) Deceleration [G] ·····Set the deceleration (G) at which the actuator stops.

(Reference) Acceleration is explained. The same concept applies to deceleration.
1G = 9800mm/s^2: Acceleration at which the actuator can accelerate to up to 9800mm/s per second
0.3G: Acceleration at which the actuator can accelerate to up to 9800mm/s × 0.3 = 2940mm/s

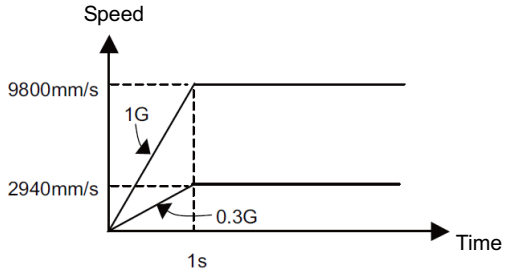

⚠ Caution: Setting the acceleration/deceleration
(1) Do not attempt to establish the setting exceeding the rated acceleration/deceleration of the actuator. Failure to follow this may cause the life of the actuator to be shortened extremely.
(2) If the actuator or work part receives impact or vibrates, lower the acceleration/deceleration. If the actuator is used continuously in such condition, the life of the actuator will drop significantly.
(3) If the transferable weight is significantly smaller than the rated payload capacity, accelerations/decelerations greater than the rating may be set. You can shorten the cycle time this way, so contact IAI if you are interested. When contacting IAI, let us know the weight, shape and installation method of the work part as well as installation condition of the actuator (horizontal/vertical).

5) Push force [%]·····Set the push torque (current-limiting value) to be used in push-motion Instruction as a percent value.
Increasing the current-limiting value increases the push force.
If "0" is set, positioning Instruction is performed.
[Refer to the 1.2.1 Actuator for the relation between the pressing force and current limiting value.]

6) Push width [mm] ·····Set the travel during push-motion Instruction.
When push-motion Instruction is performed, the actuator moves at the speed and rated torque set as part of positioning information, just like normal positioning, until the remaining travel enters the range set here. Once the remaining travel enters this range, the actuator moves to the position set in 1) while pushing the load.
How the actuator operates as it pushes the work part toward the end point, start point and intermediate point is illustrated below.

[Pushing toward the end point or intermediate point]

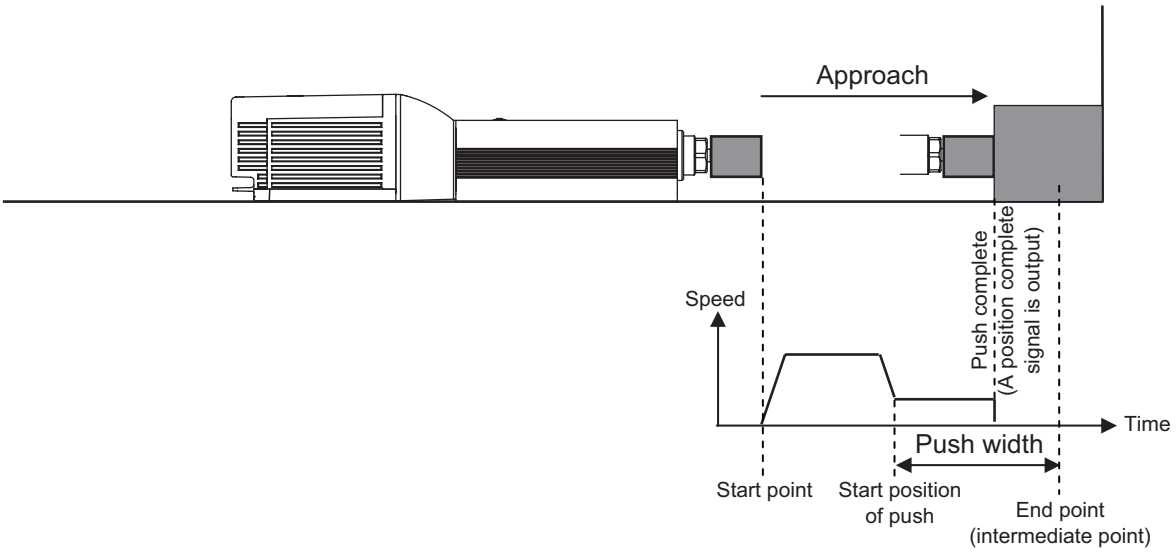

[Pushing toward the start point or intermediate point = Pulling]

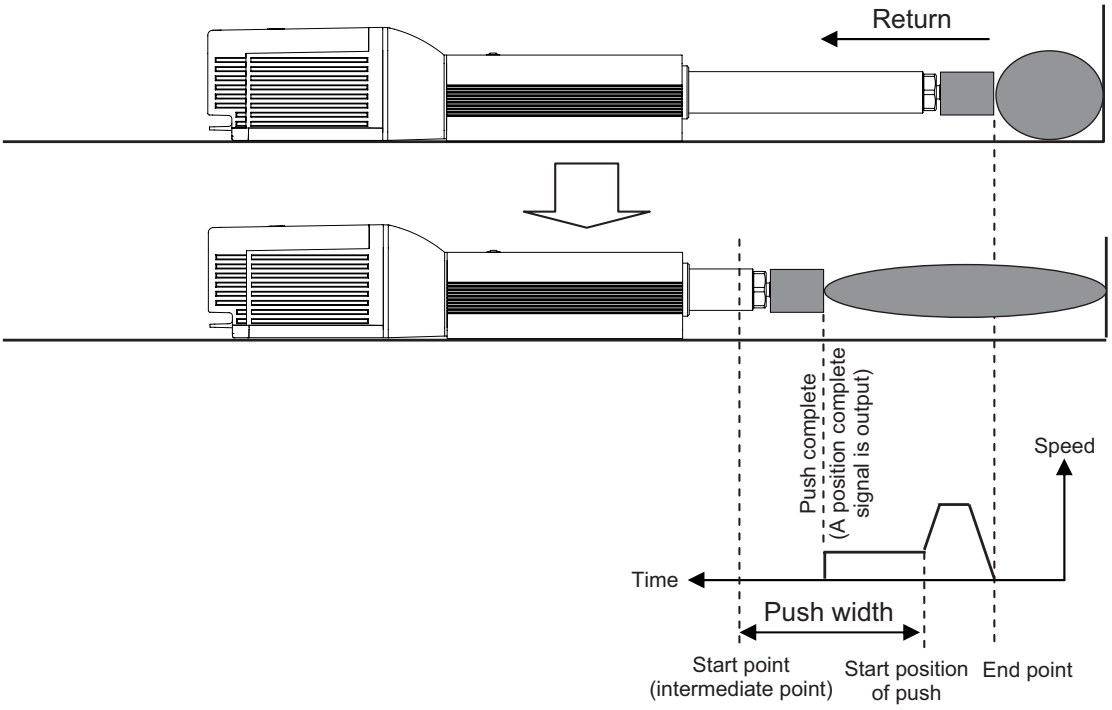

7) Energy-Saving Function····· When Ecology is enabled, you can have the motor power (servo) turned off automatically upon elapse of a specified period to save power after completion of positioning. Set the applicable period beforehand using a parameter.

Parameter No.	Parameter name	Initial value	Setting range
10	Auto servo OFF delay time [sec]	1	0 to 9999

[Auto motor power (Auto servo) OFF]
The motor power (servo) will turn off automatically upon elapse of a specified period after completion of positioning. When the next positioning command is issued, the motor power (servo) turns on automatically and positioning is performed. Since no holding current flows while the motor is at standstill, power consumption can be reduced.

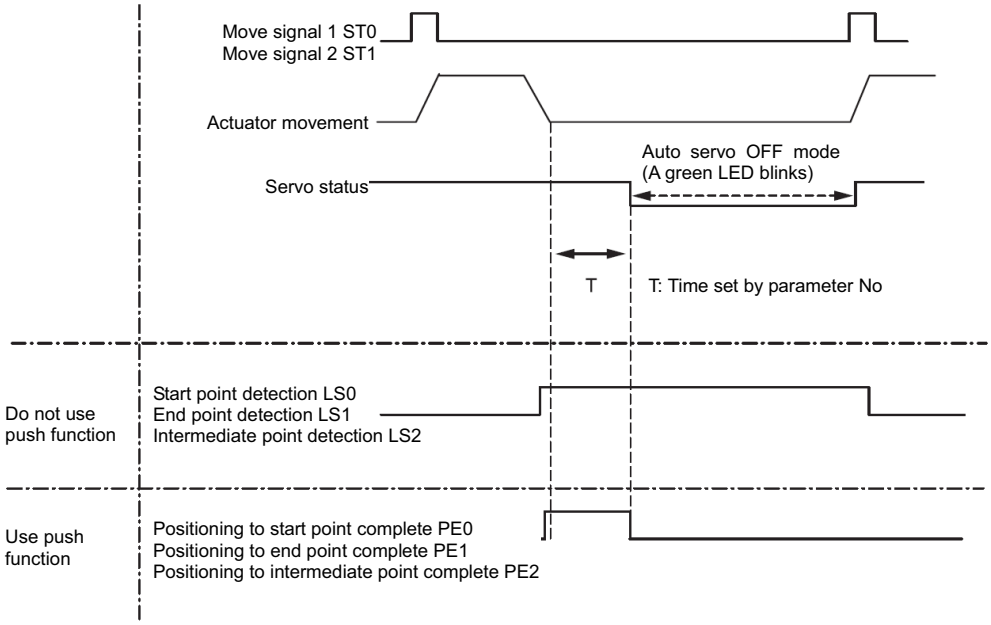

[Statuses of position detection output signals when the push function is not used]
Even when the motor power (servo) is turned off, as long as the actuator is positioned within the positioning band (parameter No.1) the start point detection signal LS0, end point detection signal LS1 or intermediate point detection signal LS2 will turn ON according to the applicable position, just like when a sensor is used. Accordingly, the position detection signal that has turned ON will remain ON after completion of positioning unless the actuator moves.

[Status of position complete signals when the push function is used]
In push-motion Instruction, the motor power (servo) does not turn off automatically while the actuator is pushing the work part.
If the actuator has missed the work part, the motor power (servo) turns off automatically.
Once the motor power (servo) turns off, a position complete status is lost. Accordingly, the push complete signal 0 PE0, push complete signal 1 PE1 and push complete signal 2 PE2 will all turn OFF regardless of the stop position.

⚠ Caution: No holding torque is applied in the auto servo OFF mode. Since the actuator will move in this condition if an external force is applied, pay due attention to contact and safety when setting any Instruction involving auto motor power (servo) OFF.

[3] Power Supply and Emergency Stop Release

(1) MEC Mode 1 (CP, MP, EMG)·····[Refer to 3.4.3 Circuit Diagram]

1) Supply the control power (CP, CP_GND), first.
2) Secondly, turn ON the motor power source (MP, MP_GND) and the emergency stop signal EMG at the same time. Do not attempt to turn ON the emergency stop signal EMG prior to the motor power source.
   The controllers get into the servo-on status by the emergency stop signal EMG being ON.
   For an actuator equipped with a brake, the brake is released by the servo being turned ON.
3) If the emergency stop signal EMG turns OFF, the servo also turns OFF. Have the motor power (MP, MP_GND) cut off at the same time. Do not attempt to cut off the motor power (MP, MP_GND) prior to the emergency stop signal EMG being turned OFF.
   For an actuator equipped with a brake, the brake becomes in operation by turning the servo OFF.

(2) MEC Mode 2 (CP24V, MPO, MPI, EMG(-))···[Refer to 3.5.3 Circuit Diagram]

1) Supply the control power (CP24, GND), first.
2) Secondly, turn ON the motor power source (MPO, MPI) and the emergency stop signal EMG(-) at the same time. Do not attempt to turn ON the emergency stop signal EMG(-) prior to the motor power source.
   Have a jumper in advance between MPO and MPI for the built-in drive cutoff relay type.
   Turn ON the motor power supply (MPO and MPI) and the emergency stop signal EMG(-) at the same time for the externally mounted drive cutoff relay type.
   The controllers get into the servo-on status by the emergency stop signal EMG(-) being ON.
   Also for an actuator equipped with a brake, the brake is released by the servo being turned ON.
3) If the emergency stop signal EMG(-) turns OFF, the servo also turns OFF. Conduct a cutoff of the motor power supply (MP0 and MP1) at the same time.
   Do not attempt to turn OFF the motor power supply (MPO and MPI) before the emergency stop signal EMG (-) is turned off for the externally mounted drive cutoff relay type.
   For an actuator equipped with a brake, the brake becomes in operation by turning the servo OFF.

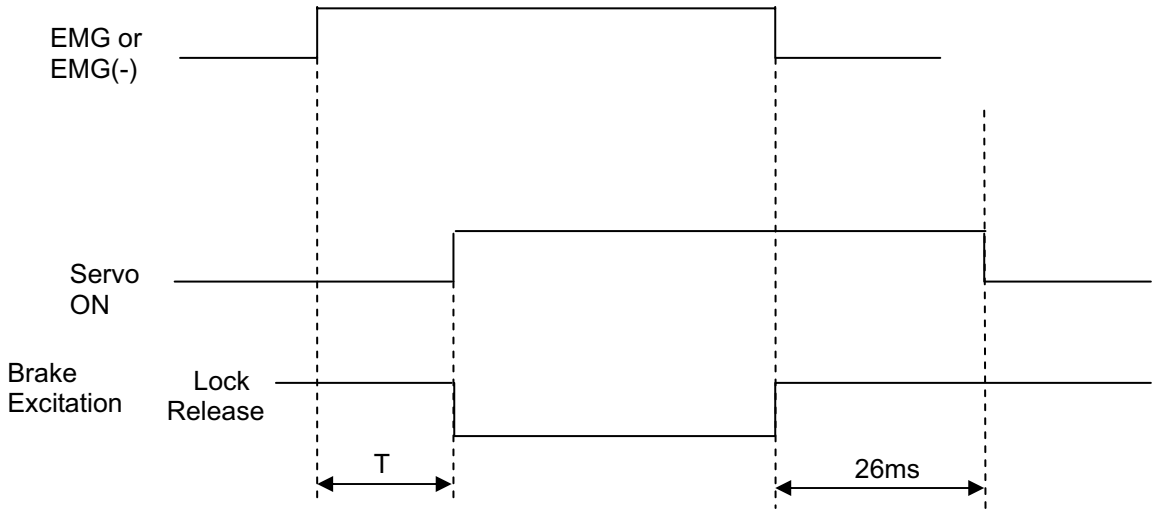

T (before detecting excitation) = SON signal identification (6ms) + Excitation detection time (T1 + T2) × Number of retry (10 times Max.) + Servo ON delay time (T3)
T (after detecting excitation) = SON signal identification (6ms) + Servo ON delay time (T3)

T1 : Parameter No.36 It differs depending on the setting of excitation detection type.
Set Value = 0 → 160ms
Set Value = 1, 2 → 220ms
T2 : Parameter No.35 Setting of excitation phase signal detection time
It is set to 10ms in the initial setting.
T3 : Fixed to 20ms

(Note) • Excitation detection operation of the motor is conducted at the first servo-on after the power is turned ON.
• PEND would not turn ON if the pause signal *STP is OFF.

[4] Brake release BK·····[Refer to 3.4.3 Circuit Diagram]

This is an input signal to compulsorily release the actuator brake with a function of MEC Mode 1. It is not equipped in MEC Mode 2. The brake compulsory release can be performed on the brake releasing switch mounted on the front panel of PIO Converter.

The brake in the actuator is a non-excitation operation type electromagnetic brake. In a normal operation, it automatically releases the brake with the servo on and gets to the brake operating status with the servo OFF.
There may be a case that the brake needs to be released to move the slider or rod manually by hand when installing the unit to the system or having a direct teach*1. In such cases, turn this signal ON. The brake can be released while it is ON.

*1 Direct teach : This operation is intended to get coordinate values to the position by moving the slider and/or the rod by hand.

⚠ Warning:
(1) Take sufficient care to release the brake. Inappropriate brake release may cause people to be injured and/or the actuator, the work and/or the machine to be damaged.
(2) After the brake is released, always make the brake applied again. Any operation with the brake remaining released is extremely dangerous. The slider or rod may drop to cause people to be injured and/or the actuator, the work and/or the machine to be damaged.
(3) Make certain that this signal is turned OFF (brake is activated) when the power is supplied to the controller. Leaving the power on may cause a drop of the slider or rod, results in an injury or damage of the actuator unit, work piece or devices.

[5] Time Constant for Control Signal Input

For the input signal for control of this controller, it is set to 6ms of input time constant to prevent an error operation due to chattering or noise from the next page and later.
Therefore, input each input signal for 6ms or more (Note) continuously. The signal cannot be identified if it is less than 6ms.

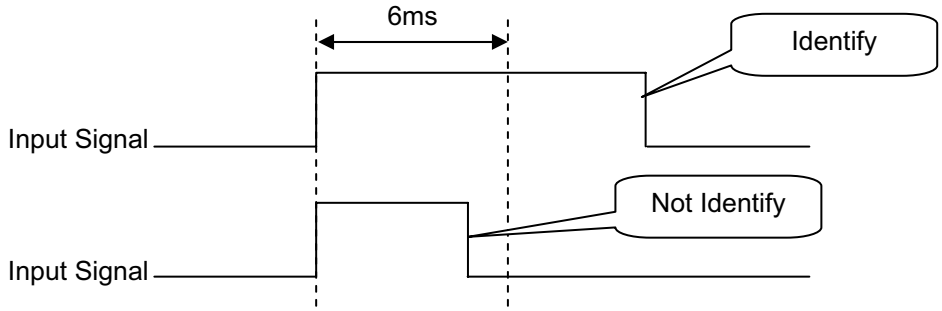

[6] Operation when Operation Pattern is “2-Point Stop (2-Point Positioning)”

(1) Home Return (ST0, HEND, LS0, LS1, PE1)
If the home-return operation is not performed with the operation panel, it will be performed with Movement Signal 1 to the first end point ST0. The actuator moves to the end point after home-return and then stops (for positioning).

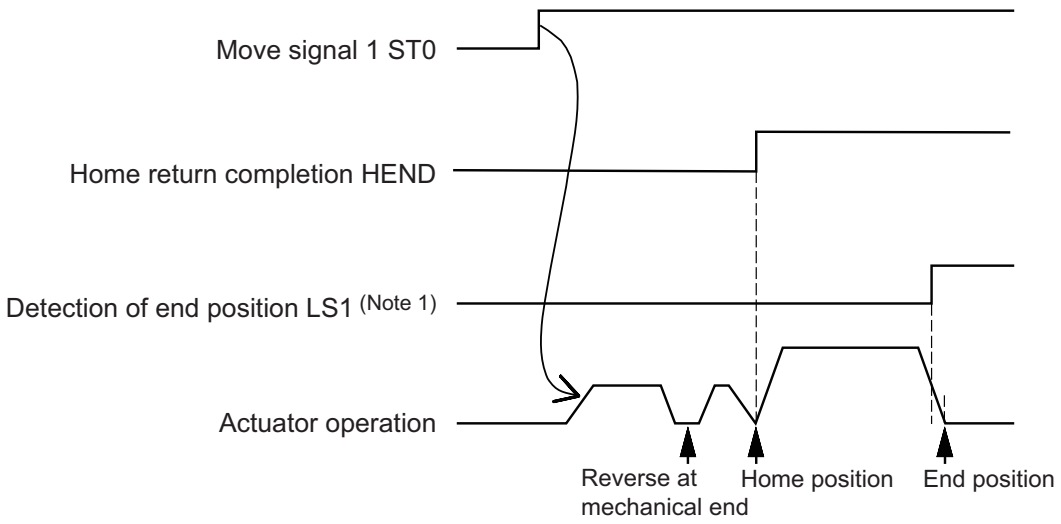

Note 1 If “Use Pressing Function” is selected in the initial setting, this signal becomes the end point positioning complete signal PE1.

(2) Positioning Operation (ST0, LS0, LS1, PE0, PE1)
Positioning is at the end point when Movement Signal 1 ST0 is ON, and goes back to start point (positioning) when it is OFF.

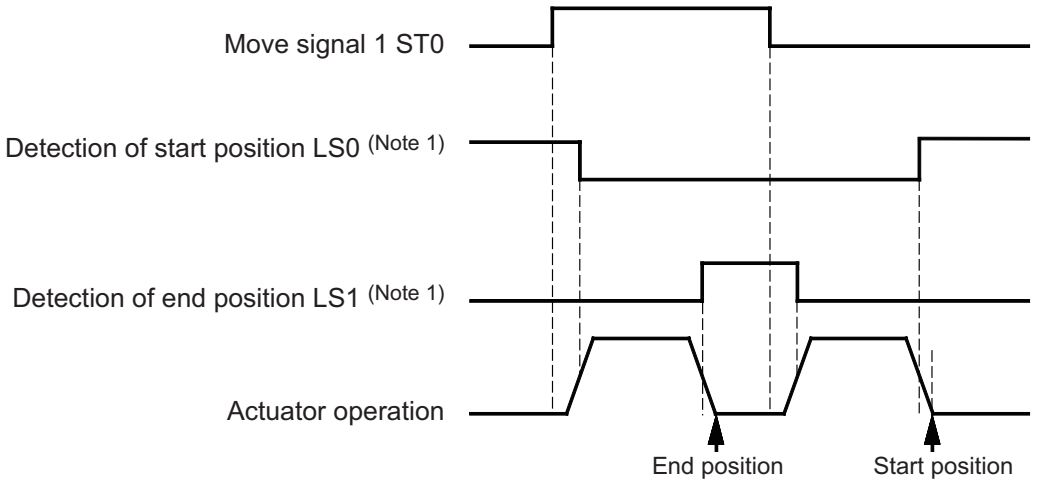

Note 1 If “Use Pressing Function” is selected in the initial setting and the positioning is performed, this signal becomes the positioning complete (LS0 → PE0, LS1 → PE1). If the operation pattern is “3-point stop (3-Point Positioning)”

(3) Pressing (ST0, PE0, PE1)
The actuator performs the pressing operation towards the end point when Movement Signal 1 ST0 is ON. The end point positioning complete signal PE1 turns ON after the pressing is completed.
When having a pressing (pulling) to the start point from the end position, turn OFF Movement Signal 1 ST0. The start point positioning complete signal PE0 will turn ON when the pressing (pulling) is complete.
In either case, even when the pressing is missed, each positioning complete signal PE0 or PE1 would turn ON.
Shown below is a time chart for when pressing to the end point.

> ⚠ Caution: Even when the pressing is missed, each positioning complete signal will turn ON. If a detection of miss-pressing is required, set a large pressing band and judge with the timer.

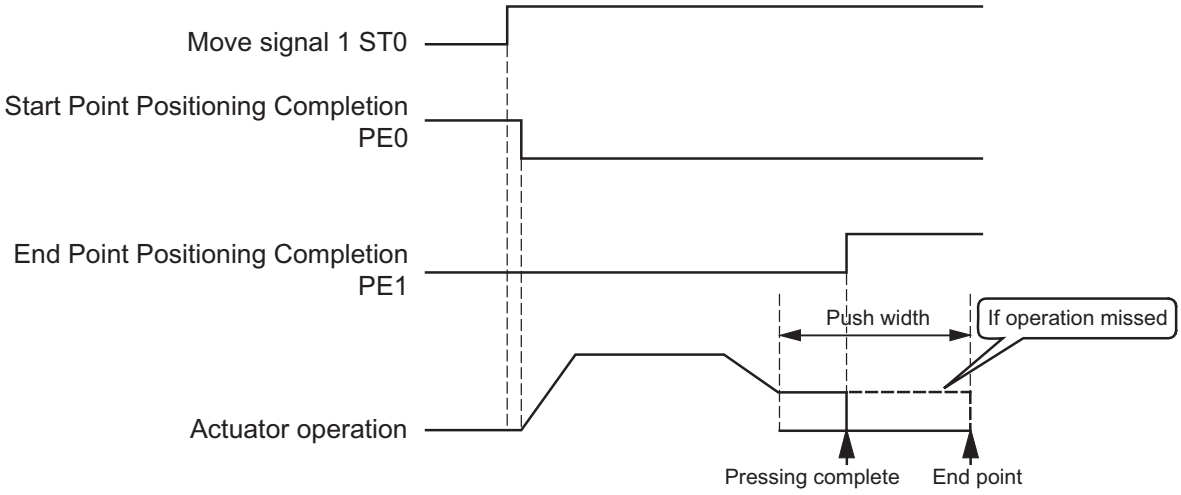

[7] Operation when Operation Pattern is “3-Point Stop (3-Point Positioning)”

(1) Home Return (ST0, LS0, LS1, PE0, PE1)
If Movement Signal 1 ST0 is ON, a stop (positioning) is made at the start point after a home-return operation. If a value other than the origin (= 0) is input, the positioning is conducted at the specified point after the home-return.
The end point movement signal 2 ST1 is invalid until the home-return complete.

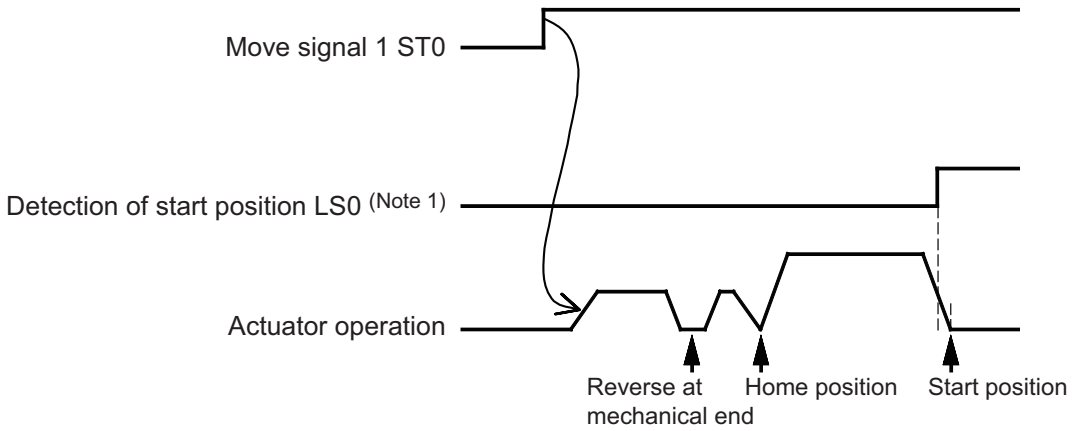

Note 1 If “Use Pressing Function” is selected in the initial setting, this signal becomes the start point positioning complete signal PE0.

(2) Positioning Operation (ST0, ST1, LS0, LS1, LS2, PE0, PE1, PE2)
Positioning is at the start point when Movement Signal 1 ST0 is ON, and at the end point when Movement Signal 2 ST1 is ON.
When both ST0 and ST1 are ON (Note 1), the positioning is at the intermediate point. If turning the both signals OFF (Note 1) during the operation, the actuator decelerates and stops.

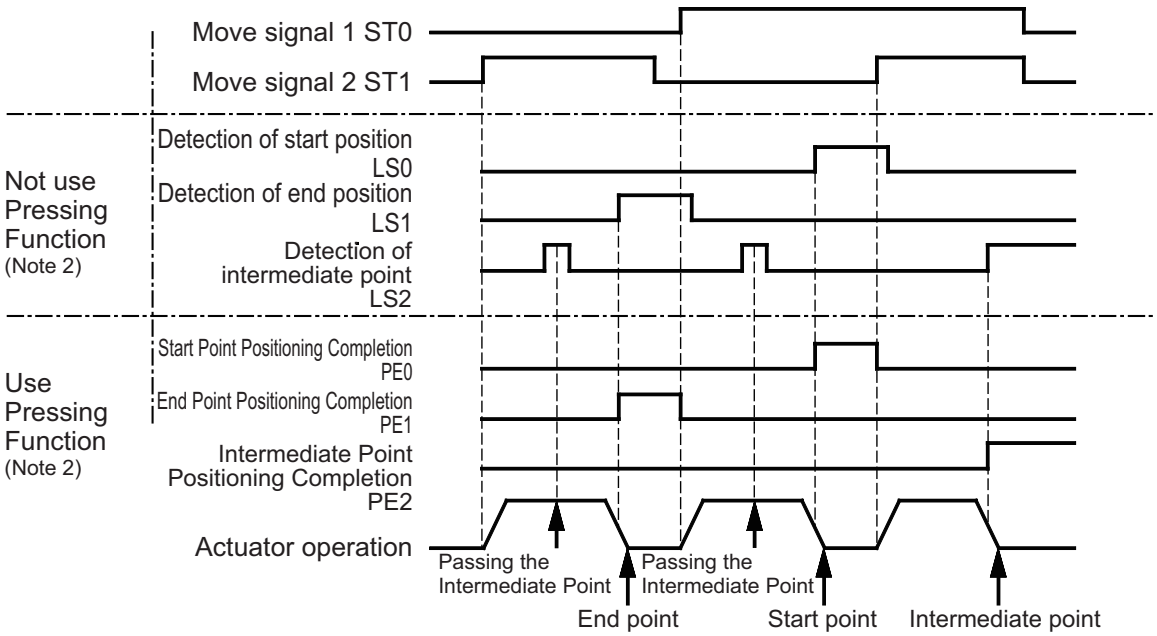

Note 1 ON and OFF can be switched over in the initial setting.
- Intermediate Point Indication Both ON : Positioning at intermediate point when both ST0 and ST1 are ON, and decelerate and stop when both OFF during an operation.
- Intermediate Point Indication Both OFF : Positioning at intermediate point when both ST0 and ST1 are OFF, and decelerate and stop when both ON during an operation.

Note 2 If “Use Pressing Function” is selected in the initial setting and the positioning is performed, this signal becomes the positioning complete (LS0 to 1 → PE0 to 1).

(3) Pressing (ST0, ST1, PE0, PE1, PE2)

Pressing movement to the end point is performed when Movement Signal 2 ST1 is ON. The end point positioning complete signal PE1 turns ON after the pressing is completed. Pressing towards the start point and intermediate point can be conducted by controlling Movement Signals 1 and 2 as the same as the ordinary positioning for the 3-point stop position (PE0 turns ON when pressing is complete at the start point and PE2 turns on when pressing is complete at the intermediate point).

Also, it is able to perform a pressing operation to the intermediate position towards the start point side. When going towards the start point side, the operation is a pulling operation, and when moving to the intermediate point, it is pulling operation if it is from the end point, and is pressing if from the start point.

Even if the pressing is missed, each positioning complete signal PE0, PE1 and PE2 will turn ON.

The diagram below is the time chart of the pressing operation in the movement towards the end point.

> ⚠ Caution: Even when the pressing is missed, each positioning complete signal will turn ON. If a detection of miss-pressing is required, set a large pressing band and judge with the timer.

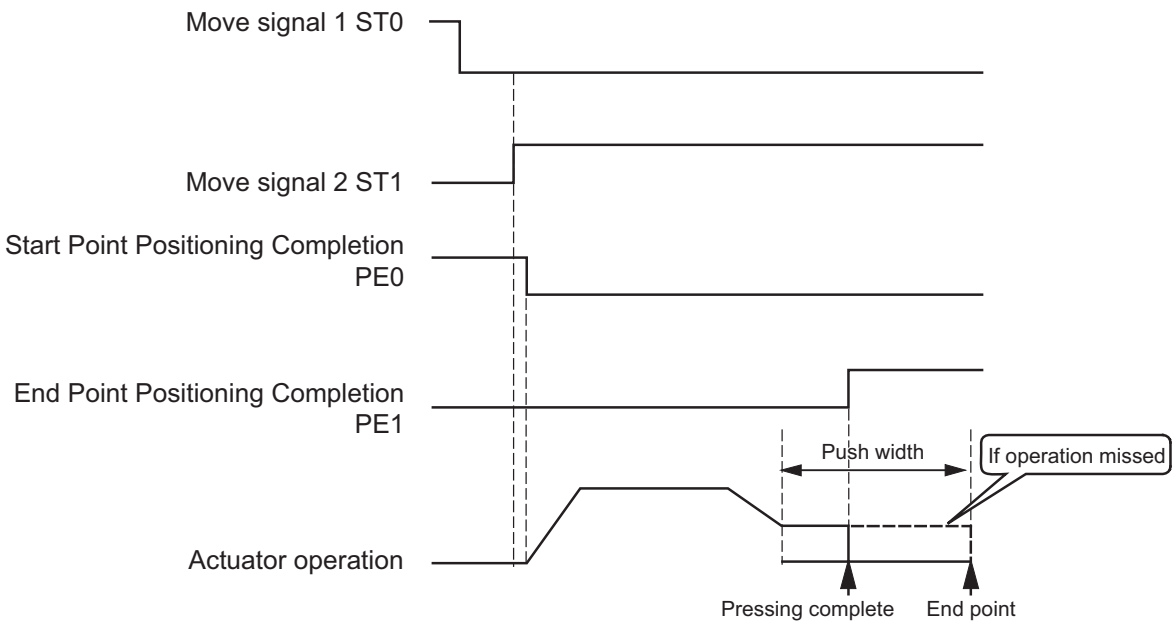

4.5 Operation in MEC Mode 3 (Test Run with Quick Teach.)

4.5.1 Operation Panel Functions

HOME Button
At the start, conduct home-return operation first to check the position of coordinate 0mm.

MANUAL Button
Press this button when having the acceleration/deceleration setting changed or having a try run. (Press it for 1 sec or more)

AUTO Button
This button is to invalid the inputs of the operation panel buttons and make PIO commands of ERC3 valid.

STOP POS NUM Button
Switch the settings of position points between 2 and 3 points. (Press it for 1 sec or more)

TEACH MODE Button
1. Accel & Speed
2. Accel & Speed & Position
Switch the settings between 1 and 2 described above

Accel & Speed Settings
These buttons are to establish the setting how the actuator should move.

FWD POS / MIDDLE POS / BACK POS
Switch to the desired type of movement (from described below).
FWD POS : Movement towards end point
BACK POS : Movement towards start point
MIDDLE POS: Movement towards intermediate point

Accel / Speed Dials
By twisting the dials, the maximum speed and rated acceleration/ deceleration settings can be changed from 1% to 100%.
* The minimum speed may not be 1% in certain cases. Refer to the instruction manual regarding the minimum speed.

SERVO ON/OFF Button
To switch the motor power ON/OFF

JOG- / JOG+ Button
To change JOG operation between (-) and (+)

SAVE Button
This button is to register speed, acceleration and position adjusted above.

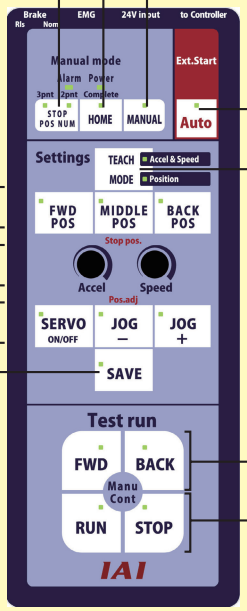

Test run
This button is to actually operate the actuator to check the registered motion.

FWD Button
The actuator moves to the end point side. Movement is made in start point → end point for 2-point operation and start point → intermediate point → end point

BACK Button
The actuator returns to the start point.

RUN Button
The actuator performs a continuous operation.
It moves back and forth between the start point and end point for 2-point operation.
It repeats the movement of start point → intermediate point → end point → start point for 3-point operation.

STOP Button
This button stops the operation above.

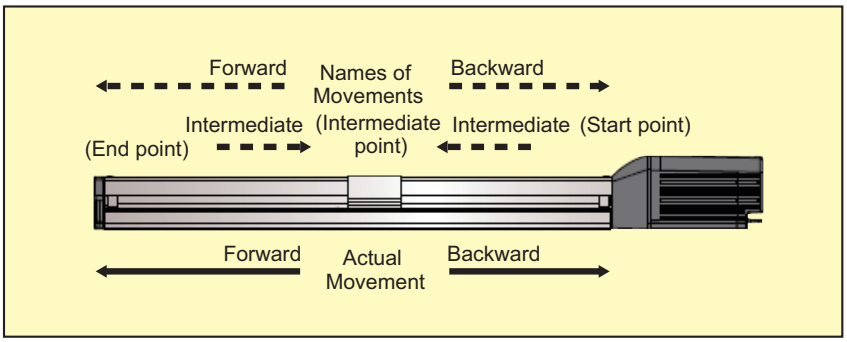

4.5.2 Operations

[1] Switches Used for Mode Selection (Auto ⇔ Manual)

When Switching to Manual Mode (Auto → Manual)	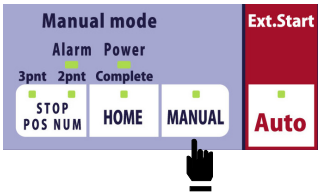	Press and hold MANUAL Button for 1 second or more and the mode changes to Manual Mode. When the mode is changed, a peep sound is made and the manual lamp turns ON.
When Switching to Auto Mode (Manual → Auto)	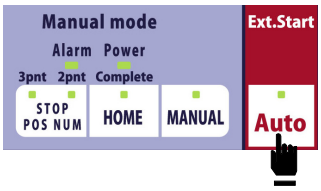	Press and hold Auto Button for 1 second or more and the mode changes to Automatic Mode. When the mode is changed, a peep sound is made and the auto lamp turns ON.

[2] Switch Used for Servo ON/OFF Operation

When Conducting Servo ON/OFF Operation (Valid in Manual Mode)		Press SERVO ON/OFF Button. Turn the servo ON and the Servo ON/OFF lamp turns ON and the lamp turns OFF when the servo is turned OFF.

[3] Switch Used for Home-Return Operation

When Conducting Home Return Operation (Valid in Manual Mode)	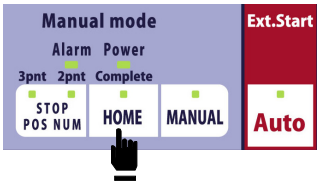	Press HOME Button. (It would not operate unless the servo is ON.) The home lamp flashes while in home return operation, and is illuminated after the home return operation is complete.

[4] Switches Used for Manual Operation

Moving Forward Manually (Valid in Manual Mode)		The actuator moves forward while this button is pressed. The actuator stops if the button is released. The lamp flashes while in forward operation, and illuminates when reached the end (intermediate) point.
Moving Backward Manually (Valid in Manual Mode)		The actuator moves backward while this button is pressed. The actuator stops if the button is released. The lamp flashes while in backward operation, and illuminates when reached the start point.

[5] Switch Used for Brake Release

It is the brake compulsory release switch for the actuator equipped with a brake.

Releasing Brake	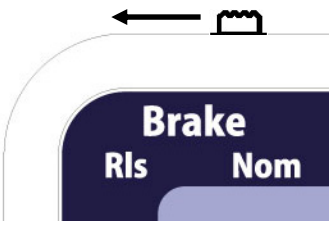	Slide the switch to the release side and the brake is compulsorily released. Have the operation of this switch on such occasions that a release of the brake is necessary as when a work piece is to be attached, the actuator needs to be moved for the direct teaching, etc. ⚠ • Be careful not to pinch fingers or damage the work with the actuator dropped with the self-gravity if installed in vertical orientation. • Do not fail to put the switch back to the normal side after the operation is finished.

[6] Switches Used to Change Positioning Point Number

Setting for the number of positioning points (2-point or 3 point stops) can be performed.

When changing the positioning point number	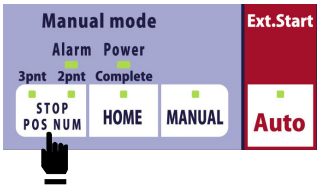	Press STOP POS NUM Button. Confirm a buzzer is made for 2 seconds and release the buttons. If the current setting is 2-point stop → The mode is changed to 3-point stop and 3pnt lamp turns ON. If the current setting is 3-point stop → The mode is changed to 2-point stop and 2pnt lamp turns ON.

⚠ Caution : In the case the number of positioning points is changed after the position programming is done, perform the programming again.
The actuator may move to an unexpected position thus it is risky.

[7] Switches Used for Position Teaching

The position (forward, backward and intermediate) can be registered with moving the actuator without using the teaching tool.
There are 2 types in the position programming.
1) Direct Teaching
2) Jog Teaching
The following operations cannot be performed unless the home return operation is completed.

(1) When Registering Position with Direct Teaching

Switching to Position Programming Mode		Press TEACH MODE Button. The acceleration and speed lamp turns ON.
Switching to Servo OFF		Press SERVO ON/OFF Button and the servo turns OFF. Servo ON/OFF lamp turns OFF. With this condition, the actuator can be moved with hand. Move it with hand to a position where it is desired to be registered.
Releasing Brake	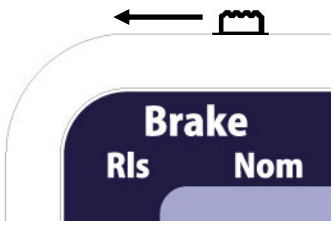	Slide the switch to the release side and the brake is compulsorily released. ⚠ • Be careful not to pinch fingers or damage the work with the actuator dropped with the self-gravity if installed in vertical orientation. • Do not fail to put the switch back to the normal side after the operation is finished.
Registering Forward Position (End Point)	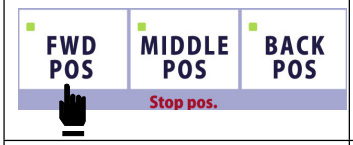	Press FWD POS (end point) Button to select. If the mode is switched over, the lamp on FWD POS button turns ON.
		Press SAVE Button. If the registration is complete, a peep sound is made and the save lamp turns ON.
Registering Back Position (Start Point)	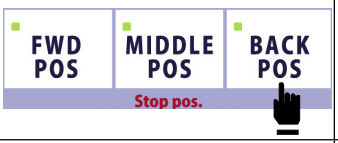	Press BACK POS (start point) Button to select. If the mode is switched over, the lamp on BACK POS button turns ON.
		Press SAVE Button. If the registration is complete, a peep sound is made and the save lamp turns ON.

Registering Middle Position (If set to 3-point positioning)	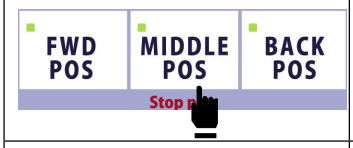	Press MIDDLE POS Button to select. If the mode is switched over, the lamp on MIDDLE POS button turns ON.
		Press SAVE Button. If the registration is complete, a peep sound is made and the save lamp turns ON. Intermediate position cannot be registered when the setting is 2-point stop.
Switching to Servo ON	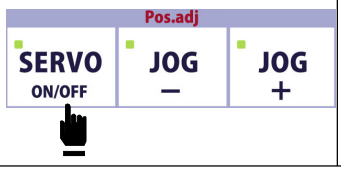	Press SERVO ON/OFF Button once again and operation becomes available. Servo ON/OFF lamp turns ON.

(2) When Registering Position with Jog and Inching Operations

Moving Forward Manually		Move the actuator forward to a position where it is desired to be registered. Press JOG+ button and the actuator performs the inching operation (Note 1) in the forward direction. Keep holding the button and the operation changes to the jog operation (Note 1). Keep holding the button further and the jog operation (Note 1) becomes faster step by step. The JOG+ lamp flashes while the button is being pressed.
Moving Backward Manually	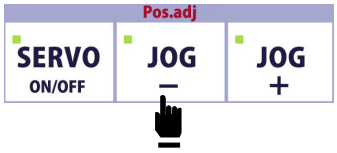	Move the actuator backward to a position where it is desired to be registered. Press JOG- button and the actuator performs the inching operation (Note 1) in the backward direction. Keep holding the button and the operation changes to the jog operation (Note 1). Keep holding the button further and the jog operation (Note 1) becomes faster step by step. The JOG- lamp flashes while the button is being pressed.
Registering Forward Position (End Point)		Press FWD POS (end point) Button to select. If the mode is switched over, the lamp on FWD POS button turns ON.
		Press SAVE Button. If the registration is complete, a peep sound is made and the save lamp turns ON.

Registering Back Position (Start Point)		Press BACK POS (start point) Button to select. If the mode is switched over, the lamp on BACK POS button turns ON.
		Press SAVE Button. If the registration is complete, a peep sound is made and the save lamp turns ON.
Registering Middle Position (If set to 3-point positioning)		Press MIDDLE POS Button to select. If the mode is switched over, the lamp on MIDDLE POS button turns ON.
		Press SAVE Button. If the registration is complete, a peep sound is made and the save lamp turns ON. Intermediate position cannot be registered when the setting is 2-point stop.

(Note 1) When registering the position with using Jog/Inching Mode, press either JOG+ or JOG- button and hold it down, and the operation mode changes in the order stated below;

1) Inching	Movement distance : Set in Parameter No.25 (Initial Value : 0.1mm)
↓	(after 1.6 seconds passed)
2) Jog	Velocity : 1mm/s
↓	(after 1 second passed)
3) Jog	Velocity : 10mm/s
↓	(after 1 second passed)
4) Jog	Velocity : 30mm/s
↓	(after 1 second passed)
5) Jog	Velocity : 50mm/s
↓	(after 1 second passed)
6) Jog	Velocity : 100mm/s

If releasing the button during jog or inching, the operation starts from 1) again.

⚠ Caution : Keep pressing Jog button and the speed increases step by step. Therefore, it is recommended to release the button once the actuator gets close to the target point and press the button again to have a more delicate operation. Otherwise, there is a risk to crash the actuator.

Position teaching function is invalid if the home return operation is incomplete. Perform the operation after performing the home-return operation.

[8] Switches and Rotary Knobs Used in Acceleration/Deceleration and Speed Settings

The speed to move and the acceleration/deceleration speed of the actuator to the forward, backward and intermediate positions can be determined.

Registering Acceleration/ Deceleration (Valid in Manual Mode)		Twist Accel Dial and adjust at the desired position. (Setting Range : 1 to 100%)
		Press SAVE Button. If the registration is complete, a peep sound is made and the save lamp turns ON. (The setting is registered together with the speed setting.)
Registering Speed (Valid in Manual Mode)		Twist Speed Dial and adjust at the desired position. (Setting Range : * to 100%) (* It differs depending on the actuator.)
		Press SAVE Button. If the registration is complete, a peep sound is made and the save lamp turns ON. (The setting is registered together with the acceleration setting.)

[9] Switches Used in Test Run

Performing Continuous Operation (Valid in Manual Mode)		Press RUN Button and a continuous operation is started. If set to 2-point positioning, the continuous operation is performed in the order of end point → start point → end point. If set to 3-point positioning, the continuous operation is performed in the order of intermediate point → end point → start point → intermediate point. The operation lamp flashes while in the continuous operation.
Stopping Continuous Operation (Valid in Manual Mode)		Press STOP Button and the operation stops. Once it is stopped, the stop lamp turns ON.

[10] Switches Used in Alarm Reset

Alarm Reset (Valid in Manual Mode)		Press and hold STOP button. Reset the alarm.

4.5.3 Test Run with Operation Panel

Turn ON Power		Power Lamp turns ON in green.
In Case of Error Issued		If an error is issued, Alarm Lamp turns ON in red. Check the alarm code either on the PC software or the touch panel teaching to have an appropriate counteraction. [Refer to Alarm]

- To Select the Mode (Auto → Manual)

Switch to Manual Mode.
Press and hold MANUAL Button for 1 second or more.

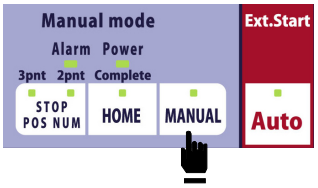

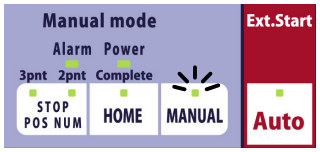

A peep sound is made and the manual lamp turns ON.

- To Perform Home Return Operation

Perform home return.

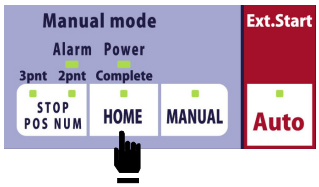

Press HOME Button.

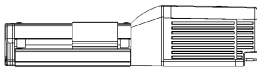

The home return operation starts.

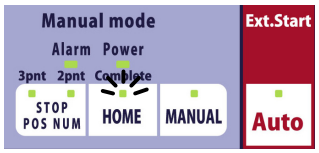

Once the home return operation is complete, the home lamp turns ON.

- To Perform Manual Operation
  Confirm the Home-return lamp is blinking and the home-return operation is completed.
  Perform a home-return operation if the Home-return lamp is off and the home-return operation is not completed.

Manual Operation (when 2-point positioning)

Move forward

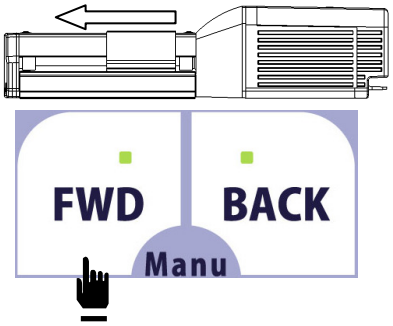

The actuator moves forward till it reaches the end point while FWD Button is being held.
The actuator stops if the button is released.

Move backward

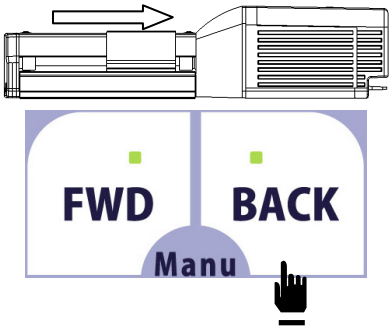

The actuator moves backward till it reaches the start point while BACK Button is being held. The actuator stops if the button is released.

Manual Operation (when 3-point positioning)

Move forward (start from origin point)

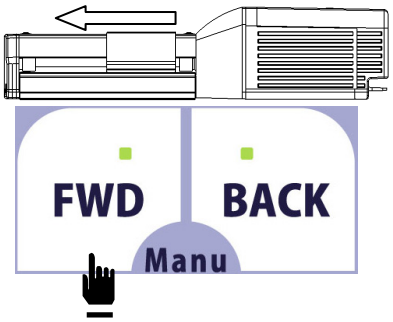

The actuator moves forward till it reaches the intermediate point while FWD Button is being held. The actuator stops if the button is released.
Lamp on FWD button flashes while in move.

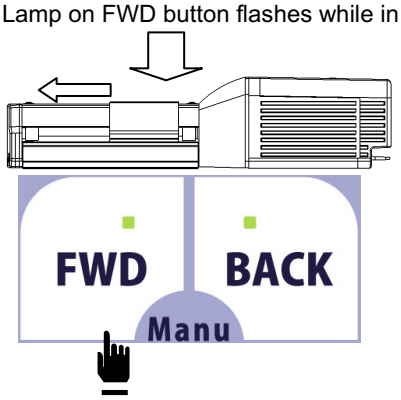

The actuator moves forward till it reaches the end point while FWD Button is held once again. The actuator stops if the button is released.
During the operation, the corresponding lamp flashes.

Move backward

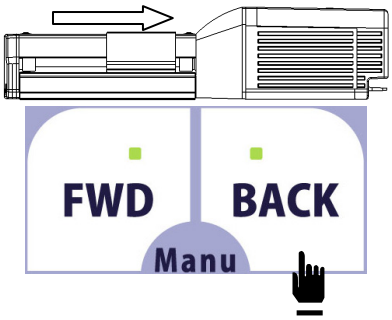

The actuator moves backward till it reaches the start point while BACK Button is being held. The actuator stops if the button is released.
Lamp on BACK button flashes while in move.

- To Confirm Current Positioning Point Number.

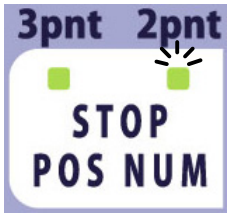

2pnt Lamp should be illuminated when set to 2-point positioning.

3pnt Lamp should be illuminated when set to 3-point positioning.

- To Change Positioning Point Number.

Press STOP POS NUM Button.
Confirm a buzzer is made for 2 seconds and release the buttons.

If the current setting is 2-point stop
→ setting is changed to 3-point stop
If the current setting is 3-point stop
→ setting is changed to 2-point stop

- Register the position.
  Confirm the Home-return lamp is blinking and the home-return operation is completed.
  Perform a home-return operation if the Home-return lamp is off and the home-return operation is not completed.

(1) When Registering Position with Direct Teaching

1) Press MANUAL Button.

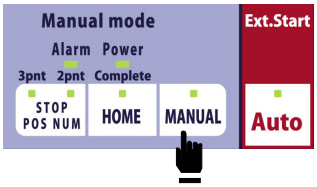

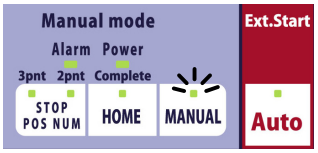

A peep sound is made and the manual lamp turns ON.

2) Press TEACH MODE Button.

The lamps for Accel & Speed and Position turn ON.

* Press TEACH MODE Button and Position Lamp turns ON/OFF. Accel & Speed Lamp is kept ON.

3) Press SERVO ON/OFF Button to turn the servo OFF.

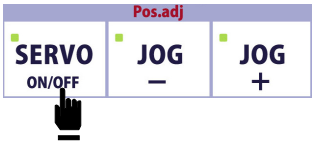

The Servo ON/OFF lamp turns OFF.
Under this condition, the actuator can be moved manually with hands.

4) Move the actuator with hand to a position where it is desired to be registered.

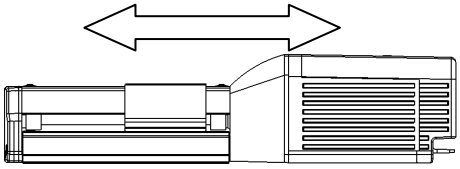

For the actuator equipped with a brake, put the brake release switch to the release side.

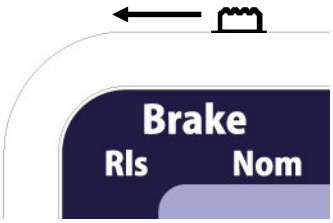

⚠
- Be careful not to pinch fingers or damage the work with the actuator dropped with the self-gravity if installed in vertical orientation.
- Do not fail to put the switch back to the normal side after the operation is finished.

5)

When selecting forward position

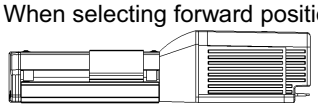

Press FWD POS Button.

The forward position lamp turns ON.

When selecting backward position

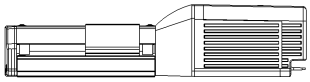

Press BACK POS Button.

The backward position lamp turns ON.

When selecting middle position

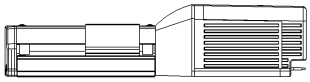

This operation cannot be conducted while “2-point stop” is selected.

Press MIDDLE POS Button.

The middle position lamp turns ON.

6)

Register the position.

Press SAVE Button.

When the registration is complete, a buzzer sounds for 1 second and the lamp starts flashing.

7)

Press servo ON/OFF button to turn the servo ON.

The Servo ON/OFF lamp turns OFF.

(2) When Registering Position with Jog and Inching Operations

1) Press MANUAL Button.

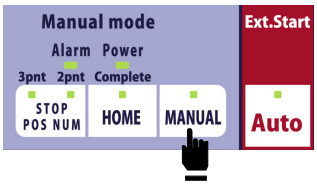

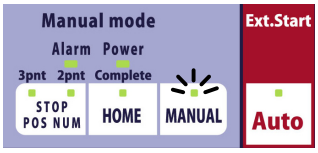

A peep sound is made and the manual lamp turns ON.

2) Press TEACH MODE Button.

The lamps for Accel & Speed and Position turn ON.

3) Move the actuator to a position where it is desired to be registered with pressing either JOG+ or JOG- button.

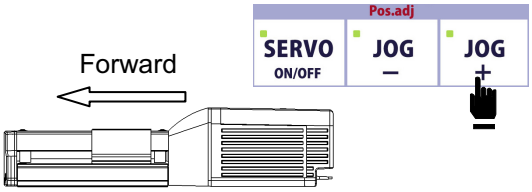

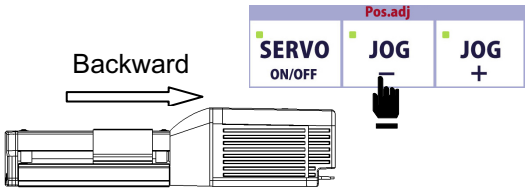

4)

When selecting forward position

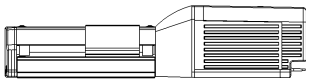

Press FWD POS Button.

The forward position lamp turns ON.

When selecting backward position

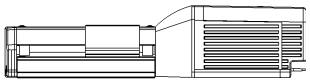

Press BACK POS Button.

The backward position lamp turns ON.

When selecting middle position

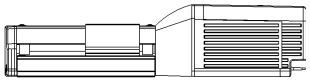

This operation cannot be conducted while “2-point stop” is selected.

Press MIDDLE POS Button.

The middle position lamp turns ON.

5)

Register the position.

Press SAVE Button.

When the registration is complete, a buzzer sounds for 1 second and the lamp starts flashing.

- Register the acceleration and speed.
  Confirm the Home-return lamp is blinking and the home-return operation is completed.
  Perform a home-return operation if the Home-return lamp is OFF and the home-return operation is not completed.

1) Press TEACH MODE Button.

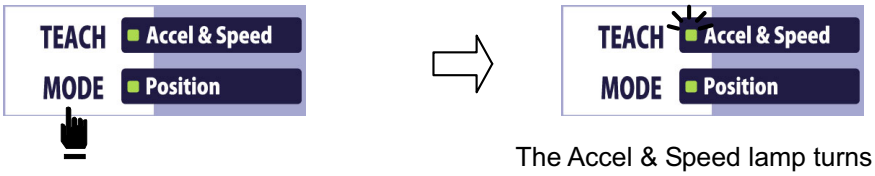

The Accel & Speed lamp turns ON and the Position lamp turns OFF.

* Press TEACH MODE Button and Position Lamp turns ON/OFF. Accel & Speed Lamp is kept ON.

2) Select either forward position, backward position or middle position.

When selecting forward position

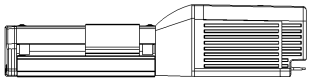

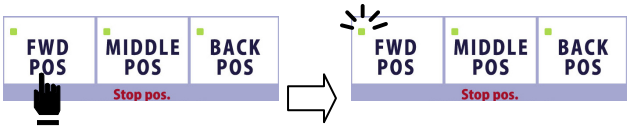

Press FWD POS Button.

The forward position lamp turns ON.

When selecting backward position

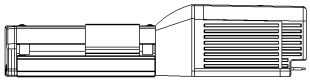

Press BACK POS Button.

The backward position lamp turns ON.

When selecting middle position

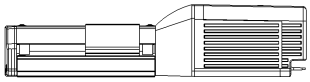

This operation cannot be conducted while “2-point stop” is selected.

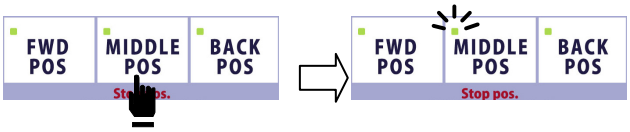

Press MIDDLE POS Button.

The middle position lamp turns ON.

3) Set the acceleration and speed.

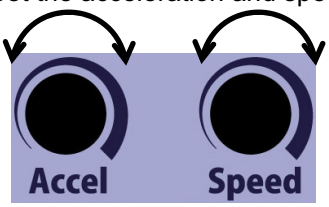

Twist the dials to adjust the settings.

Accel Dial	: Turn clockwise to make a quick start of movement and anticlockwise to make a slow start
Speed Dial	: Turn clockwise to make a high speed movement and anticlockwise to make a low speed movement

4) Register the settings.

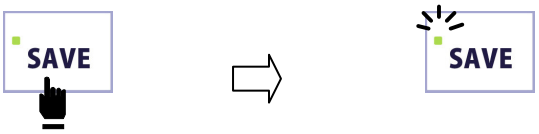

Press SAVE Button.

When the registration is complete, a buzzer sounds for 1 second and the lamp starts flashing.

- To Have a Test Run

Press MANUAL Button.

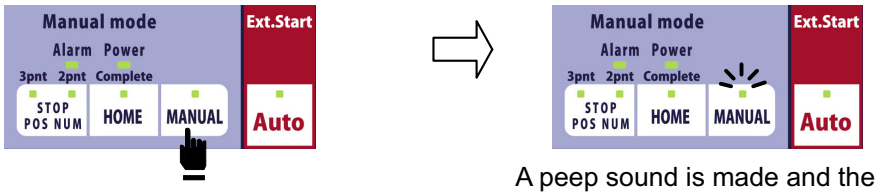

A peep sound is made and the manual lamp starts flashing.

Continuous operation

Press RUN Button and a continuous operation is started.
The RUN button flashes during continuous operation.

Press STOP Button and the continuous operation stops.

(Note) In the case that Quick Search (PCM-PST-1, PCM-PST-2 or PCM-PST-EU) integrated (connected) with the power unit is used to activate ERC3, the high output setting becomes invalid automatically when the Quick Search is connected.
Therefore, the unit may not operate under the specifications of when the high output setting is valid.

Chapter 5 Power-saving Function (Automatic Servo-off and Full Servo Functions)

ERC3 actuator possesses the automatic servo OFF function and full servo function to reduce the power consumption while the actuator is stopped. When using the power saving function, read the explanation in this section narrowly to understand well so there is no trouble in safety and operation. Automatic servo OFF function is not available in Pulse Train Mode.

5.1 Positioner Mode 1 and 2

Automatic Servo-off function automatically turns the servo OFF in certain time after positioning process is finished. The next positioning command is issued to turn the servo ON automatically and achieve the positioning. No holding current flows in the stop state to allow the power consumption to be saved.
3 types of patterns can be set for the time since positioning complete till servo turned OFF, and either one can be selected.
In the full servo function, the power consumption can be reduced by having a servo control to save the current during a stop.
The power saving function applies the power saving method set in Parameter No.53 or “Stop Mode” in the position table depending on the stop condition of the actuator.

Positioner Mode 1		PIO Pattern 0	PIO Pattern 1, 2
Positioner Mode 2		PIO Patterns 0 to 4	PIO Pattern 5
Stop Condition	Servo-on complete after power being supplied (before positioning to target position)		Depends on setting in Parameter No.53 (Stop Mode setting in position table is invalid)
	Home return completion (before positioning to target position)	Power saving function executed with the setting held in Parameter No.53 (Stop Mode setting in position table is invalid)	
	Positioning complete to target position set in position table	Depends on setting of “Stop Mode” in each position number (Setting of Parameter No.53 is invalid)	

⚠ Caution:
(1) Do not use this function if the automatic servo OFF is followed by pitch feed (relative movement).
Servo ON/OFF may cause slight position shift to occur. If position shift occurs due to external force during servo OFF, positioning to the correct position is disabled. It is because pitch feed is operated based on the position at start used as the base point.
(2) Automatic Servo-off Function is not effective while in pressing operation. Do not use. It becomes effective at completion of positioning. In pressing, the function becomes effective only when miss-pressing occurs (the status at the completion of operation without pressing is the same as that at the completion of positioning).
No retaining torque is provided in automatic servo-off. The actuator can move with an external force. Pay attention to the interference to the peripherals and the safety in the installation.

(1) Setting of periods taken until automatic servo OFF
Three periods from completion of positioning to automatic servo OFF can be set in the following parameters in seconds [sec].

Parameter No.	Description
36	Auto Servo Motor OFF Delay Time 1 (Unit: sec)
37	Auto Servo Motor OFF Delay Time 2 (Unit: sec)
38	Auto Servo Motor OFF Delay Time 3 (Unit: sec)

(2) Set of power-saving mode
Select a proper power-saving mode from the conditions below. Set the corresponding value in the stop mode or parameter No.53 of the position table.

Set Value	Operation after completion of positioning
0	Servo ON not changed
1	Automatic servo OFF in a certain time (set in Parameter No.36)
2	Automatic servo OFF in a certain time (set in Parameter No.37)
3	Automatic servo OFF in a certain time (set in Parameter No.38)
4	Full Servo Control
5	Full-servo control for a certain time (value set in Parameter No.36) and then automatically turning servo OFF
6	Full-servo control for a certain time (value set in Parameter No.37) and then automatically turning servo OFF
7	Full-servo control for a certain time (value set in Parameter No.38) and then automatically turning servo OFF

(3) Status of positioning complete signal in selection of automatic servo OFF
Automatic servo OFF causes the actuator to be in other than the positioning complete state due to the servo OFF. Positioning complete signal PEND is turned OFF. Changing the PEND signal to the in-position signal judging whether the actuator is stopped within the positioning width zone instead of the positioning complete signal allows PEND not to be turned OFF during servo OFF.
This setting is also reflected to the complete position numbers PM1 to PM** of PIO patterns 0 to 3 in PIO converter or the current position number PE** of PIO pattern 4 in positioner mode 2, which are to check the positioning complete position number.
Define the setting in Parameter No.39.

Value set in Parameter No.39	Content of PEND signal	Signal outputs during automatic servo OFF		
		PEND	PM1 to PM**	PE**
0	Positioning Completion Signal	OFF	OFF	OFF
1	In-position Signal	ON	ON	ON

(Note) SV of ERC3 Motor Unit flashes in green while the automatic servo is OFF.
Status Display LED flashes in green when using PIO Converter.

[For Parameter No.39 = 0]

Operation of actuator	Positioning operation	Automatic servo OFF standby	Servo OFF	Positioning operation
Servo Condition	ON	ON	OFF	ON
Completed Position No. Output (Current position number output)	PM1 to ** =0 (PE** = OFF)	PM1 to ** = Output (PE** = ON)	PM1 to ** = 0 (PE** = OFF)	PM1 to ** = 0 (PE** = OFF)
Positioning Completion Signal PEND	OFF	ON	OFF	OFF

Servo OFF Delay Time (Parameter No.36 to 38)

(Note) PM1 to ** in the areas filled in gray is the output signal of PIO Pattern 0 to 3 in Positioner Mode 2, and PE** is that of PIO Pattern 4

[For Parameter No.39 = 1]

Operation of actuator	Positioning operation	Automatic servo OFF standby	Servo OFF	Positioning operation
Servo Condition	ON	ON	OFF	ON
Completed Position No. Output (Current position number output)	PM1 to ** = 0 (PE** = OFF)	PM1 to ** = Output (PE** = ON)	PM1 to ** = 0 Output (PE** = ON)	PM1 to ** = 0 (PE** = OFF)
Positioning Completion Signal PEND	OFF	ON	ON	OFF

Servo OFF Delay Time (Parameter No.36 to 38)

(Note) PM1 to ** in the areas filled in gray is the output signal of PIO Pattern 0 to 3 in Positioner Mode 2, and PE** is that of PIO Pattern 4

5.2 Pulse Train Control Mode

Power saving cannot be performed with the automatic servo OFF. Only the full servo control setting is available.
In the full servo function, the power consumption can be reduced by having a servo control to save the current during a stop.

Stop Condition	Servo-on complete after power being supplied (before positioning to target position)	Power saving function executed with the setting held in Parameter No.53
	Home return completion (before positioning to target position)	
	Positioning completion	

Set of power-saving mode
Select a number from the conditions below and set it in Parameter No.53.

Set Value	Operation after completion of operation
0	Servo ON not changed
1	Servo ON not changed
2	Servo ON not changed
3	Servo ON not changed
4	Full servo control
5	Full servo control
6	Full servo control
7	Full servo control

5.3 MEC Mode 1, 2 and 3

The setting of power saving function for MEC Mode 1 and 2 can be conducted on MEC PC Software or CON-PTA. The setting of power saving function for MEC Mode 3 cannot be conducted in the try run of Quick Teach.

5.3.1 Automatic Servo-off Function

To have the automatic servo-off function activated, set to “Activate” in “Power Saving” in the operational condition table.
Automatic Servo-off function automatically turns the servo OFF in certain time after positioning process is finished. Servo is automatically turned ON and positioning is conducted once the next positioning command is issued. Power consumption is reduced since the retaining current does not flow during a stop.
The time setting from positioning complete till servo-off is to be established in the parameter.

(Note) SV of ERC3 Motor Unit flashes in green while the automatic servo is OFF.
Status Display LED flashes in green when using PIO Converter.

(1) Time Setting Till Automatic Servo-off
The time from positioning complete till servo-off can be set in seconds [sec] as the unit of time in the parameter shown below.

Parameter No.	Description
10	Auto Servo-motor OFF Delay Time 1 (Unit: sec)

(2) Position Detecting Signal Condition When Auto Servo-off Selected
During a positioning operation, position detecting signals LS0 to LS2 remain turned ON if the actuator is in the range of the positioning band of the target position even though the servo is turned OFF with the automatic servo-off function.

Operation of actuator	Positioning operation	Automatic servo OFF standby	Servo OFF	Positioning operation
Servo Condition	ON	ON	OFF	ON
Limit Switch Output	LS**=OFF	LS**=ON	LS**=ON	PE**=OFF

Servo OFF Delay Time (Parameter No.10)

(3) Positioning Completion Signal Condition When Auto Servo-off Selected
The servo will not turn OFF with the automatic servo-off function during pressing operation when the pressing function is used. The servo turns OFF only when the pressing operation is missed.
The positioning complete signals PE0 to PE2 turn OFF while the servo is OFF.

Operation of actuator	Pressing operation	Automatic servo OFF standby (Pressing missed)	Servo OFF (Pressing missed)	Pressing operation
Servo Condition	ON	ON	OFF	ON
Current position number output	PE**=OFF	PE**=ON	PE**=OFF	PE**=OFF

Servo OFF Delay Time (Parameter No.10)

⚠ Caution:

(1) Automatic Servo-off Function is not effective while in pressing operation. Do not use. It becomes effective at completion of positioning. In pressing, the function becomes effective only when miss-pressing occurs (the status at the completion of operation without pressing is the same as that at the completion of positioning).

(2) No retaining torque is provided in automatic servo-off. The actuator can move with an external force. Pay attention to the interference to the peripherals and the safety in the installation.

(3) Since the operation of Quick Teach in MEC Mode 3 is a try run operation, the setting of this function cannot be conducted. However, if the setting of Parameter No.11 is conducted in advance with MEC PC Software or CON-PTA, the operation follows the setting. Please be careful of this.

5.3.2 Full Servo Function

Set “1” in Parameter No.11 when full servo function is to be conducted.
In the full servo function, the power consumption can be reduced by having a servo control to save the current during a stop.

(1) Setting of Power Saving Method
Select whether to turn the servo ON or to have the full servo control in Parameter No.11.
By setting “Power Saving” valid in the position table, automatic servo-off is triggered after certain time is passed.

Value set in Parameter No.11	Operation after completion of positioning
0	Full stop : Servo ON not changed
1	Servo-motor stop : Full servo control

Chapter 6 Adjustment of Operation

6.1 Absolute Reset and Absolute Battery

6.1.1 Absolute Reset

PIO Converter is necessary for Simple Absolute Type. Simple Absolute Type retains the encoder position information in the battery backup. It is not necessary to perform the home-return operation every time the power is turned ON.
In order to hold the encoder position information, absolute reset is required.
Provide absolute reset in the following cases:

(1) Initial activation
(2) When the absolute battery was replaced with the power to the PIO converter is shut, and
(3) When disconnected the power supply and I/O cable for the actuator from PIO Converter

The absolute reset is performed by using a teaching tool such as PC software or PIO. The absolute reset using PIO is available in Positioner Mode 2. Also, the absolute reset cannot be performed on Quick Teach.

> ⚠ Caution: If it is Pulse Train Control Mode, it would not comply with simple absolute type. Take the greatest care.

[1] Absolute reset procedure from teaching tool

(1) For PC software

1) Connect the actuator with the PIO converter. [Refer to Chapters 3.]
2) Connect the absolute battery (Enclosed battery if starting up for the first time, new battery if replacing) to the absolute battery connecting connector on the bottom of the PIO converter. [Refer to 6.1.1 [3].]
3) Connect PC, turn the power ON to PIO Converter and start up RC PC software.
4) Alarm 0EE “Absolute Encoder Error Detection 2” is shown. Select position data from main window and press Alarm button to conduct alarm reset.

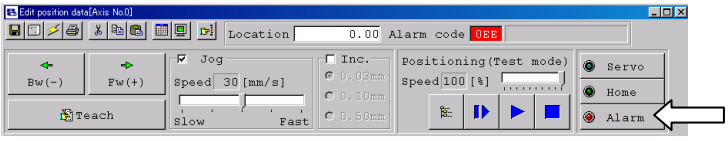

5) Select position data from main window and press Home button to have a home-return. Once the home return is complete, the point of origin is memorized at the same time the origin point is established.

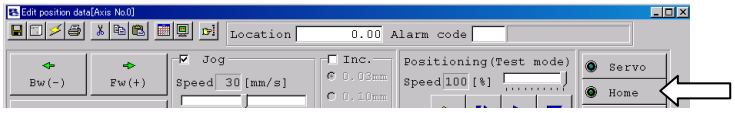

(2) For CON-PTA

1) Connect the actuator with the PIO converter. [Refer to Chapters 3.]
2) Connect the absolute battery (Enclosed battery if starting up for the first time, new battery if replacing) to the absolute battery connecting connector on the bottom of the PIO converter. [Refer to 6.1.1 [3].]
3) Connect CON-PTA and turn the power ON to PIO Converter.
4) Alarm 0EE "Absolute Encoder Error Detection 2" is shown.
   Press Alarm button in Alarm Occurrence window to conduct alarm reset.

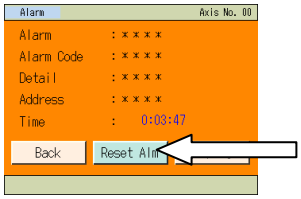

Press Reset Alm.

5) Have a home-return operation by following the steps below. Once the home return is complete, the point of origin is memorized at the same time the origin point is established.

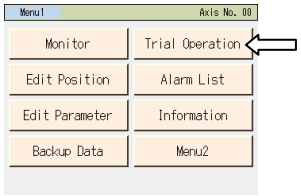

Press Trial Operation on the Menu 1 screen.

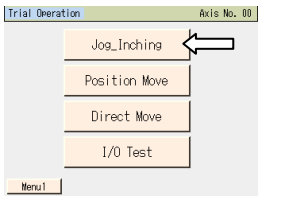

Press Jog_Inching on Trial screen.

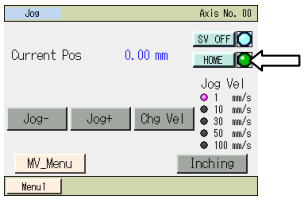

Press Home on Job/Inching screen.

[2] Absolute reset using PIO

This is a function valid in Positioner Mode 2.

1) Turn the reset signal RES from OFF to ON. (Processed with ON edge.)
2) Check that the alarm signal *ALM is ON (Alarm (Note 1) is cancelled).
   If the cause of the alarm is not removed, an alarm will be present again (*ALM signal OFF).
   Check the condition including other alarm causes.
   (It is not necessary for PIO Pattern 5)
3) Turn ON the pause signal *STP.
4) Turn the servo-on signal SON ON.
5) Wait until the servo-on status SV turns ON.
6) Turn the home return signal HOME (ST0 signal in case of PIO pattern 5) ON (with ON edge). The home return operation is started.
7) When the homing completion signal HEND is turned ON (completion of home return), absolute reset is completed.

[Absolute Reset Process]

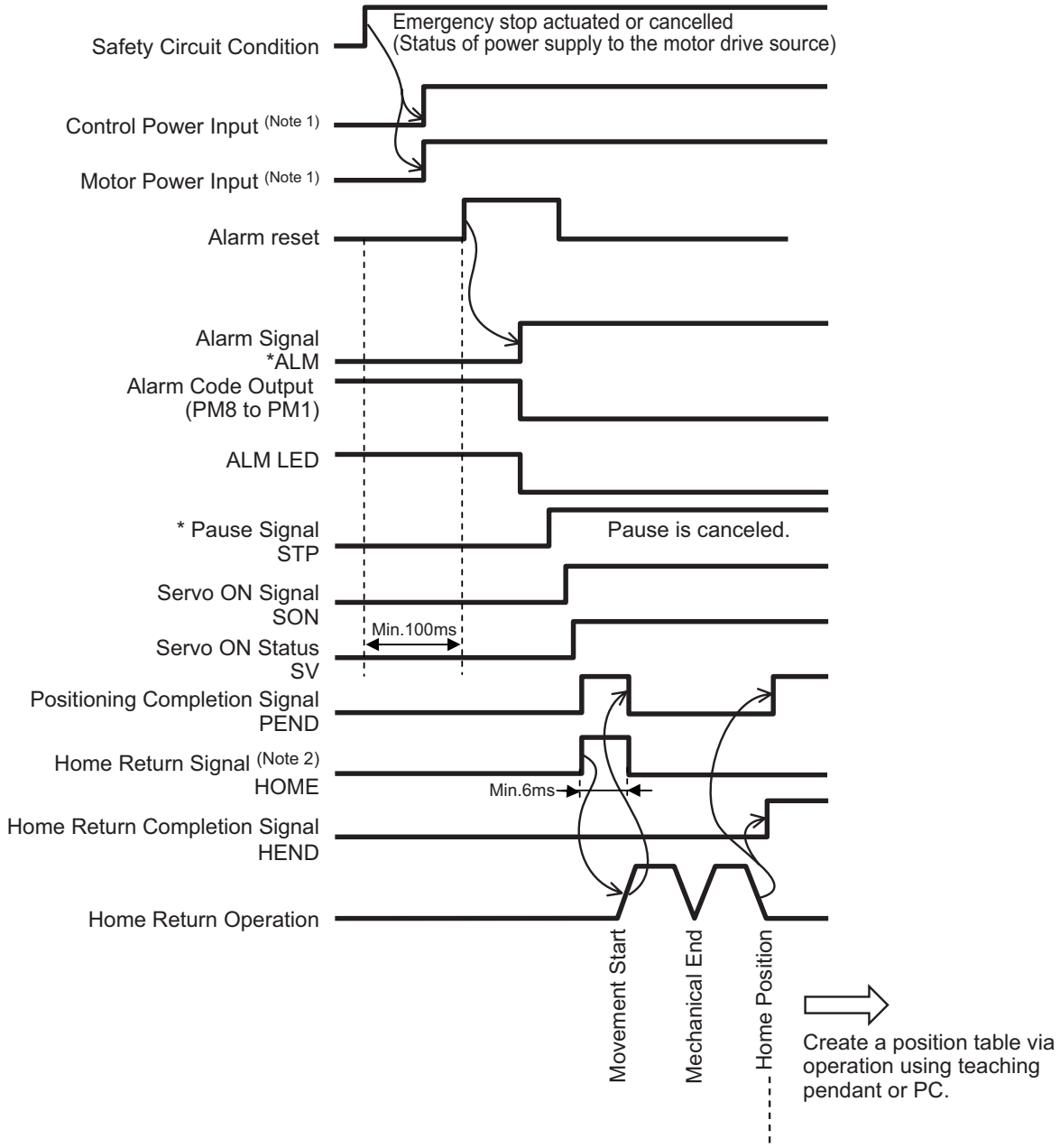

Note 1 Have the control power supply and motor power supply in common, and have them turned ON that the same time.

Note 2 This should be ST0 for Pattern 5

[3] Absolute Battery

In PIO Converter for Simple Absolute Type, there are a battery for Absolute Type and fabric hook-and-loop faster enclosed.
Separate the fastener and attach each to side surface of PIO Converter and the battery for Absolute Type. Join the fastener attached on the absolute battery and that on PIO Converter to fix them together. Connect the battery to the absolute battery connector on the bottom of the battery PIO Converter.

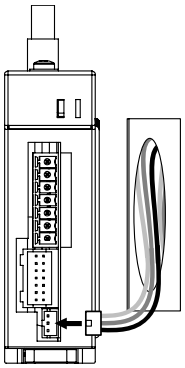

(1) Absolute Battery Type

Item	Specifications
Battery model	AB-7
Battery voltage	3.6V
Current capacity	3300mAH
Reference for battery replacing timing(Note 1)	Approx. 3 years (It varies significantly by the effects of the usage condition)

(Note 1) Replace the battery regularly.

(2) Absolute Battery Charge

Please have the battery charged for more than 72 hours before using for the first time or after replacing with a new one. The battery gets charged while the controller is supplied with 24V power.
It is possible to retain the encoder data for the duration shown below for each hour of battery charge.

Data Holding Time

Value for User Parameter No.155	0	1	2	3
Data holding time per hour of battery charge time (Note 1) (reference)	6.6H	5.0H	3.3H	1.6H
Holding time when fully charged (Note 1) (reference)	20 days	15 days	10 days	5 days

(Note 1) Followings are the reference values of time assuming the battery is new.

Leaving the controller power OFF for more than the data holding time will lead to a loss of the data. Have the battery charged as early as possible.

⚠ Caution: There is life to the battery and the duration for data holding will decrease. Replace the battery with a new one if the retaining time is remarkably dropped even with enough charging time.

(Example) From Monday to Friday ; charge for 8 hours per day, discharge for 16 hours, Saturday and Sunday ; use with discharge

1) Parameter Setting Value: if it is 3…
   Full charge amount ; 24 [h] × 3 [day] = 72 [h]
   Total charge amount ; 8 [h] × 1.6 [h] × 5 [day] = 64 [h]
   Total discharge amount ; 16 [h] × 5 [day] + 48 [h] = 128 [h]
   → Assuming to have a battery charge for 72 hours before Monday, and starting on Monday with a full charge, it is necessary to have 3 days of battery charge periods in 10-day cycle.

2) Parameter Setting Value: if it is 2…
   Total charge amount ; 8 [h] × 3.3 [h] × 5 [day] = 132 [h]
   Total discharge amount ; 16 [h] × 5 [day] + 48 [h] = 128 [h]
   → It is not necessary to have a continuous full charge if starting on Monday. 4-hour charge is stored every week. The upper limit is the reference value for the retaining duration after fully charged.

(3) Absolute Battery Voltage Drop Detection

If the voltage of the absolute battery is dropped, the error detection responding to the voltage is held.

Voltage	PIO Signals	Alarm
3.1V ±8% or less	Alarm output *ALM(Note 1) OFF	0EE Absolute Encoder Error Detection 2 or 0EF Absolute Encoder Error Detection 3

(Note 1) *ALM are the signals of active low.
After the power is supplied to the controller, they are usually ON and turned OFF when an error is detected.
Replace the battery before alarm is generated due to the lamp display by *ALM signal of PLC.
If the alarm is generated, it will be necessary to absolute reset after the battery replacement.

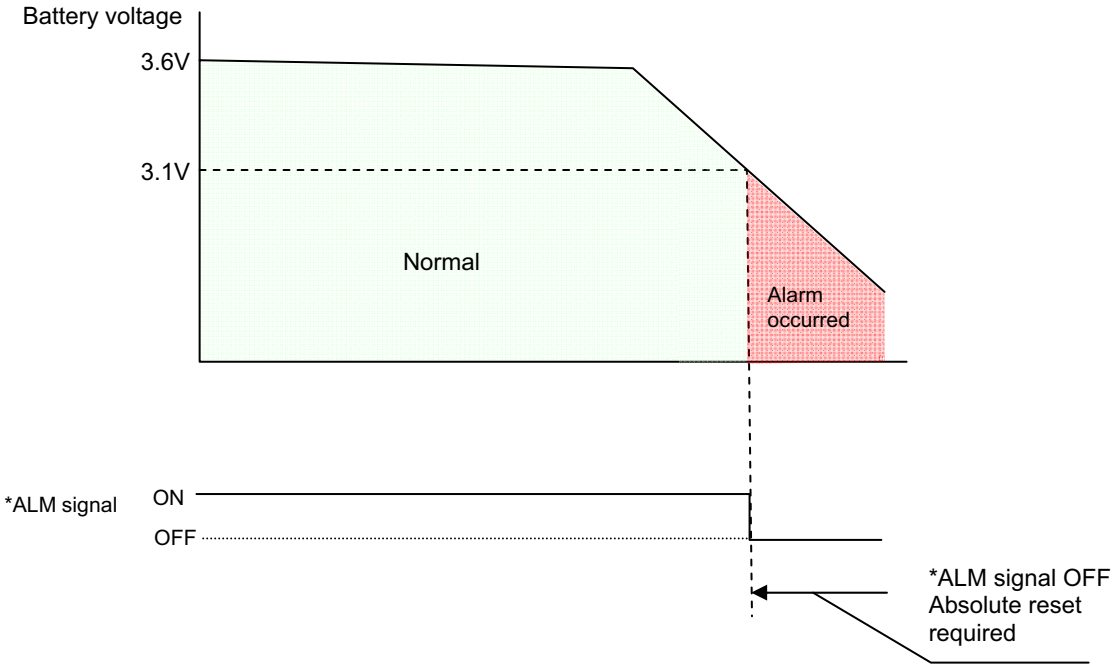

(4) Replacement of absolute battery

When replacing the battery, leave the power to the PIO converter ON, remove the battery connector and replace with a new battery.

[Removal]

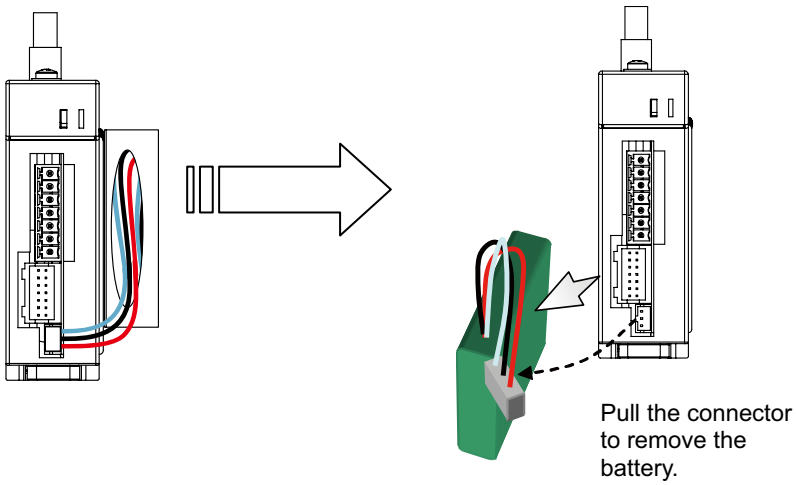

[Attachment]

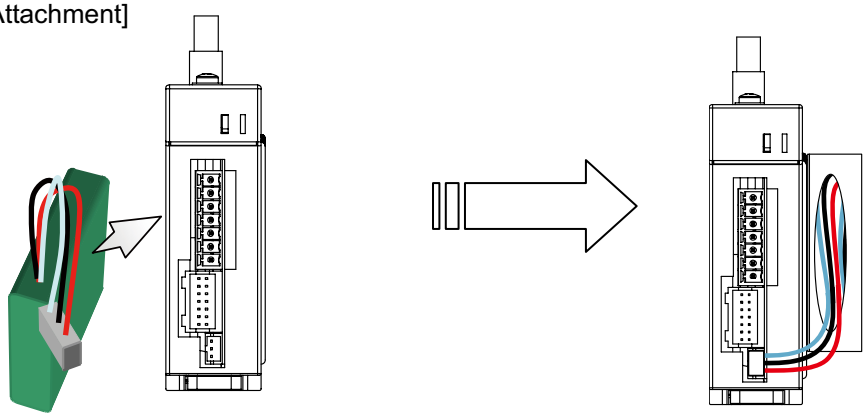

6.2 High Output Setting and Gain Scheduling Function

6.2.1 High Output Setting

High output setting is a function to increase the speed, acceleration/deceleration and transportable weight. (It is set effective at delivery.) [Refer to 1.2.1 Actuator.]
Setting of enable and disable switches over between the parameters of “Velocity Loop Proportional Gain” and “Velocity Loop Integrated Gain”.

6.2.2 Gain Scheduling Function

Stepper motor possesses the characteristics that the output decreases if speed increases. Therefore, to maintain the sufficient control performance in high speed operation range, the settings of “Velocity Loop Proportional Gain” and “Velocity Loop Integrated Gain” are raised to set (to highly respond to speed change).
This may become a cause of magnetic noise or small vibration in low speed operation range in some cases.
Gain Scheduling Function is a system to change the gain in response to the speed to realize an operation with the optimized control condition.
This function cannot be used in MEC Mode.

6.2.3 Setting in Positioner Mode 1 & 2 and Pulse Train Control Mode

The setting of enable/disable for the high output setting and Gain Scheduling Function can be performed in parameters.

High output setting = Parameter No.152
Gain scheduling = Parameter No.144

At the delivery, the high output setting is set enable while Gain Scheduling Function disable.
With the setting of enable/disable for each setting, the parameters for each function are switched over between “Velocity Loop Proportional Gain” and “Velocity Loop Integrated Gain” to perform controls.
Shown in the table below is the parameter numbers of “Velocity Loop Proportional Gain” and “Velocity Loop Integrated Gain” to be enable by the setting conditions.

		High output setting (Parameter No.152)	
		1 (Enable = in Delivery)	0 (Disable)
Gain scheduling (Parameter No.144)	101 to (Enable)	Parameter No.145, 146	
	to 100 (Disable = in Delivery)	Parameter No.153, 154	Parameter No.31, 32

No.31, 145, 153 = Speed Loop Proportional Gain
No.32, 146, 154 = Speed Loop Integral Gain

> ⚠ Caution: Smart Tuning is a function that is valid when the high output setting is enable and Gain Scheduling is disable. Note that this function cannot be used in other settings. [Refer to the instruction manual of the PC software provided separately for how to handle Smart Tuning.]
> If the gain scheduling function is activated, an operation with the velocity and acceleration/deceleration set in Smart Tuning Function cannot be secured.
>
> The velocity and acceleration/deceleration set in Smart Tuning Function are to be the values selected from the specifications when the gain operation is made with No.153 and 154.
> When the gain scheduling function is activated, the gain operation is made with No. 145 and 146, and the actuator specifications may differ from the operation with No.153 and 154.

6.2.4 Setting in MEC Mode 1 to 3

Making the high output setting enable/disable is to be conducted in Parameter No.28.
The high output setting is set enable at the delivery.
With the setting of enable/disable for the high output setting, the parameters are switched over between “Velocity Loop Proportional Gain” and “Velocity Loop Integrated Gain” to perform controls.
Shown in the table below is the parameter numbers of “Velocity Loop Proportional Gain” and “Velocity Loop Integrated Gain” to be enable by the setting conditions.

High output setting (Parameter No.152)	0 (Disable)	Parameter No.5, 6
	1 (Enable = in Delivery)	Parameter No.29, 30

⚠ Caution: Please note that the high output setting automatically turns disable if Quick Teach equipped with a power supply unit (PCM-PST-1, PCM-PST-2 or PCM-PST-EU) is connected.

6.3 I/O Parameter

Parameter data should be set appropriately according to the applicaiton requirements.
When a change is required to the parameters, make sure to back up the data before the change so the settings can be returned anytime.
With using PC software, it is able to store the backup to the PC.
Leave a memo if using the teaching pendant.
For a quick data recovery after such works as investigation on malfunction and replacement of ERC3 and PIO converter, it is also recommended to back up or take a note on the parameter after the setting change.
The change to the parameters will be activated after they are edited, written to the FeRAM, then either software reset or reboot of the power. It will not be active only with writing on the teaching tool.

⚠ Warning: Establishment of parameter setting gives a great influence to operation.
Wrongly established setting could cause not only an operation error or malfunction, but also it is very dangerous.
Settings at the delivery enable the product to operate standardly.
Understand very well about the control logic of ERC3 and PIO converter if making a change or performing a setting suitable to the system.
Please contact us if you have anything unclear.
Do not attempt to turn OFF the power to the ERC3 or PIO converter while writing the parameters.

6.3.1 Positioner Mode 1, Positioner Mode 2 and Pulse Train Control Mode

[1] I/O Parameter List

The categories in the table below indicate whether parameters should be set or not. There are five categories as follows:

A : Check the settings before use.
B : Use parameters of this category depending on their uses.
C : Use parameters of this category with the settings at shipments leaving unchanged as a rule. Normally they may not be set.
D : Parameters of the category are set at shipment in accordance with the specification of the actuator. Normally they may not be set.
E : Parameters of the category are exclusively used by us for convenience of production. Changing their settings may not only cause the actuator to operate improperly but also to be damaged. So, never change the setting of the parameters.

Category do not appear on the teaching tool.
Also, the unused parameter numbers are not mentioned in the list.

No.	Category	Name	Symbol	Unit	Input Range	Default factory setting	For Positioner Mode 1	For Positioner Mode 2	For Pulse Train Mode	Relevant sections This section
1	B	Zone 1+	ZNM1	mm	-9999.99 to 9999.99	Actual stroke on + side (Note1)	○	○		[2] (1), [2] (68)
2	B	Zone 1-	ZNL1	mm	-9999.99 to 9999.99	Actual stroke on - side (Note1)	○	○		[2] (1), [2] (68)
3	A	Soft limit+	LIMM	mm	-9999.99 to 9999.99	Actual stroke on + side (Note1)	○	○	○	[2] (2)
4	A	Soft limit-	LIML	mm	-9999.99 to 9999.99	Actual stroke on - side (Note1)	○	○	○	[2] (2)
5	D	Home return direction	ORG	–	0: Reverse 1: Normal	In accordance with actuator (Note1)	○	○	○	[2] (3)
6	C	Press & hold stop judgment period	PSWT	msec	0 to 9999	255	○	○		[2] (4)
7	C	Servo gain number	PLGO	–	0 to 31	In accordance with actuator (Note1)	○	○	○	[2] (5), [3]
8	B	Default velocity	VCMD	mm/s	1 to Actuator's max. speed	Rated actuator speed (Note1)	○	○		[2] (6)
9	B	Default acceleration/deceleration	ACMD	G	0.01 to actuator's max. acceleration/ deceleration	Rated actuator's acceleration/ deceleration (Note1)	○	○	○	[2] (7)
10	B	Default positioning width	INP	mm	0.01 to 999.99	0.10	○	○	○	[2] (8)
12	B	Current-limiting value at standstill during positioning	SPOW	%	1 to 70	35	○	○	○	[2] (9)
13	C	Current-limiting value during home return	ODPW	%	1 to 100	In accordance with actuator (Note1)	○	○	○	[2] (10)
15	B	Pause input disable	FPIO	–	0: Enabling 1: Disabling	0	○	○		[2] (11)
16	B	SIO communication speed	BRSL	bps	9600 to 230400	38400	○	○	○	[2] (12)
17	B	Minimum delay time for slave transmitter activation	RTIM	msec	0 to 255	5	○	○	○	[2] (13)
21	B	Servo ON input disable	FPIO	–	0: Enabling 1: Disabling	0		○	○	[2] (14)
22	C	Home return offset level	OFST	mm	0.00 to 9999.99	In accordance with actuator (Note1)	○	○	○	[2] (15)
23	B	Zone 2+	ZNM2	mm	-9999.99 to 9999.99	Actual stroke on + side (Note1)		○		[2] (1)
24	B	Zone 2-	ZNL2	mm	-9999.99 to 9999.99	Actual stroke on - side (Note1)		○		[2] (1)
25	A	PIO pattern selection	IOPN	–	0 to 5	0 (Standard Type)	○	○	○	[2] (17)
26	B	PIO jog velocity	IOJV	mm/s	1 to Actuator's max. speed	100		○		[2] (18)

Note 1 The setting values vary in accordance with the specification of the actuator. At shipment, the parameters are set in accordance with the specification.

I/O Parameter List (Continued)

No.	Category	Name	Symbol	Unit	Input Range	Default factory setting	For Positioner Mode 1	For Positioner Mode 2	For Pulse Train Mode	Relevant sections This section
27	B	Movement command type	FPIO	–	0: Level 1: Edge	0	○	○		[2] (19)
28	B	Default movement direction for excitation-phase signal detection	PHSP	–	0: Reverse 1: Normal	In accordance with actuator (Note1)	○	○	○	[2] (20)
29	B	Excitation-phase signal detection time	PHSP	msec	1 to 999	In accordance with actuator (Note1)	○	○	○	[2] (21)
30	B	Excitation detection type	PHSP	–	0: Conventional method 1: New method 1 2: New method 2	0	○	○	○	[2] (22)
31	C	Velocity loop proportional gain	VLPG	–	1 to 27661	In accordance with actuator (Note1)	○	○	○	[2] (23), [3]
32	C	Velocity loop integral gain	VLPT	–	1 to 217270	In accordance with actuator (Note1)	○	○	○	[2] (24), [3]
33	C	Torque filter time constant	TRQF	–	0 to 2500	In accordance with actuator (Note1)	○	○	○	[2] (25), [3]
34	C	Press velocity	PSHV	mm/s	1 to actuator's max. pressing speed	In accordance with actuator (Note1)	○	○		[2] (26)
35	C	Safety velocity	SAFV	mm/s	1 to 250 (max. for actuator of 250 or less)	100	○	○	○	[2] (27)
36	B	Auto servo-motor OFF delay time 1	ASO1	sec	0 to 9999	0	○	○		[2] (28)
37	B	Auto servo-motor OFF delay time 2	ASO2	sec	0 to 9999	0	○	○		[2] (28)
38	B	Auto servo-motor OFF delay time 3	ASO3	sec	0 to 9999	0	○	○		[2] (28)
39	B	Position complete signal output method (Note2)	FPIO	–	0: PEND 1: INP	0	○	○		[2] (29)
40	C	Home-return input disable	FPIO	–	0: Enabled 1: Disabled	0	○	○	○	[2] (30)
42	C	Enable function	FPIO	–	0: Enabled 1: Disabled	1	○	○	○	[2] (31)
45	B	Silent interval magnification	SIVM	times	0 to 10	0	○	○	○	[2] (32)
46	B	Velocity override	OVRD	%	0 to 100	100	○	○		[2] (33)
47	–	PIO jog velocity 2	IOV2	mm/s	1 to Actuator's max. speed	100				[2] (18)
48	B	PIO inch distance	IOID	mm	0.01 to 1.00	0.1		○		[2] (34)
49	–	PIO inch distance 2	IOD2	mm	0.01 to 1.00	0.1				[2] (35)
50	–	Load output judgment time period	LDWT	msec	0 to 9999	255				[2] (36)
51	–	Torque inspected range	TRQZ	–	0: Enabled 1: Disabled	0				[2] (37)
52	B	Default acceleration/deceleration mode	CTLF	–	0 to 2	0 (Trapezoid)	○	○	○	[2] (38)
53	B	Default stop mode	CTLF	–	0 to 7	0 (Not Applicable)	○	○	○	[2] (39)
55	B	Position-command primary filter time constant	PLPF	msec	0.0 to 100.0	0	○	○	○	[2] (40), Chapter 3 3.3.5 [1]
56	B	S-motion rate	SCRV	%	0 to 100	0	○	○	○	[2] (41)
57	B	Torque limit	TQLM	%	0 to 70	70			○	Chapter 3 3.3.5 [2]
58	E	Clearing deviation during servo OFF or alarm stop	FSTP	–	0: Enabled 1: Disabled	1			○	Chapter 3 3.3.5 [3]
59	C	Error monitor during torque limiting	FSTP	–	0: Enabled 1: Disabled	0			○	Chapter 3 3.3.5 [4]

Note 1 The setting values vary in accordance with the specification of the actuator. At shipment, the parameters are set in accordance with the specification.

Note 2 In the pulse-train mode, INP is automatically selected. (Cannot be selected)

I/O Parameter List (Continued)

No.	Category	Name	Symbol	Unit	Input Range	Default factory setting	For Positioner Mode 1	For Positioner Mode 2	For Pulse Train Mode	Relevant sections This section
60	B	Deviation counter clear input	FPIO	–	0: Enabled 1: Disabled	0			○	Chapter 3 3.3.5 [5]
61	B	Torque limit command input	FPIO	–	0: Enabled 1: Disabled	0			○	Chapter 3 3.3.5 [6]
62	B	Pulse count direction	FPIO	–	0: Forward motor rotation 1: Reverse motor rotation	In accordance with actuator (Note1)			○	Chapter 3 3.3.5 [7]
63	B	Command pulse input mode (Pulse train mode)	CPMD	–	0 to 2	1 (pulse-train and moving direction angle)			○	Chapter 3 3.3.4 [2]
64	B	Command pulse input mode polarity	CPMD	–	0: Positive Logic 1: Negative Logic	0			○	Chapter 3 3.3.4 [2]
65	B	Electronic gear numerator	CNUM	–	1 to 4096	2048			○	Chapter 3 3.3.4 [1]
66	B	Electronic gear denominator	CDEN	–	1 to 4096	125			○	Chapter 3 3.3.4 [1]
67	B	Compulsory stop input	FPIO	–	0: Enabled 1: Disabled	0			○	Chapter 3 3.3.5 [8]
71	B	Feed forward gain	PLFG	–	0 to 100	0	○	○	○	[2] (53)
77	D	Ball screw lead length	LEAD	mm	0.01 to 999.99	In accordance with actuator (Note1)	○	○	○	[2] (54)
83	B	Absolute unit	ETYP	–	0: Incremental 1: Simple Absolute Type	In accordance with specification at order accepted		○		[2] (55)
88	D	Software limit margin	SLMA	mm	0 to 9999.99	In accordance with actuator (Note1)	○	○	○	[2] (56)
91	C	Current limit value at stopping due to miss-pressing	PSFC	–	0: Current limit value during movement 1: Current limit value during pressing	0	○	○		[2] (57)
110	B	Stop method at servo OFF	FSTP	–	0: Rapid stop 1: Deceleration to stop	0	○	○	○	[2] (58)
111	B	Calendar function	FRTC	–	0: Does not use the calendar timer 1: Use the calendar timer	1		○		[2] (59)
112	B	Monitoring mode	FMNT	–	0: Does not use 1: Monitor function 1 2: Monitor function 2	0	○	○	○	[2] (60)
113	B	Monitoring period	FMNT	msec	1 to 100	1	○	○	○	[2] (61)

Note 1 The setting values vary in accordance with the specification of the actuator. At shipment, the parameters are set in accordance with the specification.

I/O Parameter List (Continued)

No.	Category	Name	Symbol	Unit	Input Range	Default factory setting	For Positioner Mode 1	For Positioner Mode 2	For Pulse Train Mode	Relevant sections This section
143	–	Overload level ratio	OLWL	%	50 to 100	100				[2] (62)
144	B	Gain scheduling upper limit multiplying ratio	GSUL	%	0 to 1023	0	○	○	○	[2] (63)
145	C	GS velocity loop proportional gain	GSPC	–	1 to 30000	750	○	○	○	[2] (64), [3]
146	C	GS velocity loop integral gain	GSIC	–	1 to 500000	4500	○	○	○	[2] (65), [3]
147	B	Total movement count threshold	TMCT	times	0 to 999999999	0 (Disabled)	○	○	○	[2] (66)
148	B	Total operated distance threshold	ODOT	m	0 to 999999999	0 (Disabled)	○	○	○	[2] (67)
149	B	Zone output changeover	FPIO	–	0: To change 1: Not to change	0	○	○		[2] (68)
152	B	High output setting	BUEN	–	0: Disabled 1: Enabled	1	○	○	○	[2] (69)
153	B	BU velocity loop proportional gain	BUPC	–	1 to 10000	200	○	○	○	[2] (70), [3]
154	B	BU velocity loop integral gain	BUIC	–	1 to 100000	4000	○	○	○	[2] (71), [3]
155	A	Absolute battery retention time	AIP	days	0: 20 days 1: 15 days 2: 10 days 3: 5 days	2		○		[2] (72)
156	B	Torque check/Light malfunction output select	SLAL	-	0: Torque check effective 1: Light malfunction effective	0		○		[2] (73)

(Note 1) The setting values vary in accordance with the specification of the actuator. At shipment, the parameters are set in accordance with the specification.

[2] Detail Explanation of Parameters

> ⚠ Caution: To make the setting enable after a change is made to parameters, have either the software reset or power reboot.

(1) Zone 1+, Zone 1- (Parameter No.1, No.2)
Zone 2+, Zone 2- (Parameter No.23, No.24)

No.	Name	Symbol	Unit	Input Range	Default factory setting
1	Zone 1+	ZNM1	mm	-9999.99 to 9999.99	Actual stroke on + side
2	Zone 1-	ZNL1	mm	-9999.99 to 9999.99	Actual stroke on - side
23	Zone 2+	ZNM2	mm	-9999.99 to 9999.99	Actual stroke on + side
24	Zone 2-	ZNL2	mm	-9999.99 to 9999.99	Actual stroke on - side

Enable zone signal outputs are to be determined by Parameter No.25 “PIO Pattern Select” and Parameter No.149 “Zone Output Switchover”.
[Refer to the Parameter No.149 for the details]
The minimum setting unit is 0.01mm.
If a specific value is set to both zone setting + and zone setting -, the zone signal is not output.
A setting sample is shown below.

[Example of linear axis]

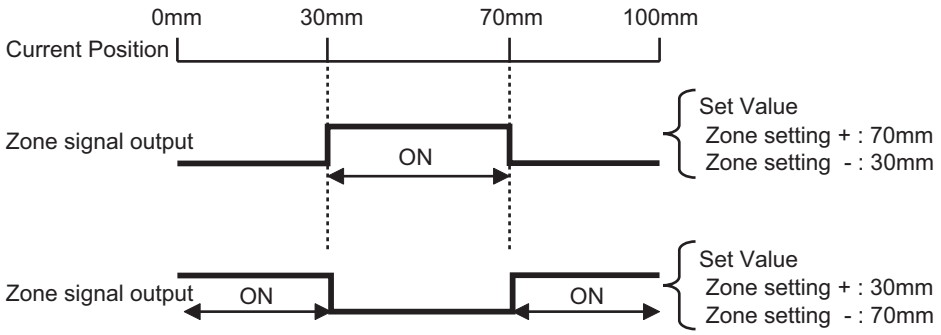

> ⚠ Caution: The signal cannot be output unless the range of the zone detection is set to a value greater than that of the minimum resolution (actuator lead length/800).

(2) Soft limit +, Soft limit - (Parameter No.3, No.4)

No.	Name	Symbol	Unit	Input Range	Default factory setting
3	Soft limit +	LIMM	mm	-9999.99 to 9999.99	Actual stroke on + side
4	Soft limit -	LIML	mm	-9999.99 to 9999.99	Actual stroke on - side

0.3mm (deg) is added to the outside of the effective actuator stroke for the setting at the delivery (since there would be an error at the end of effective stroke if set to 0). Adjustment can be made freely within the movable range considering the suitability to the system for purposes of avoidance to interference, crash, etc. Adjust the setting referring the figure below if necessary.
The operational range for jog and inching after the home return is 0.2mm less than the set value. Therefore, in case that it is necessary to have jog or inching operation up to the end of the stroke, set to the value extended by 0.3mm from the end of the stroke considering 0.1mm margin to correspond to load inertia.
An incorrect soft limit setting will cause the actuator to collide into the mechanical end, so exercise sufficient caution.
The minimum setting unit is 0.01mm.

Example) Set the effective stroke to between 0mm and 80mm
Parameter No.3 (positive side) 80.3
Parameter No.4 (negative side) -0.3

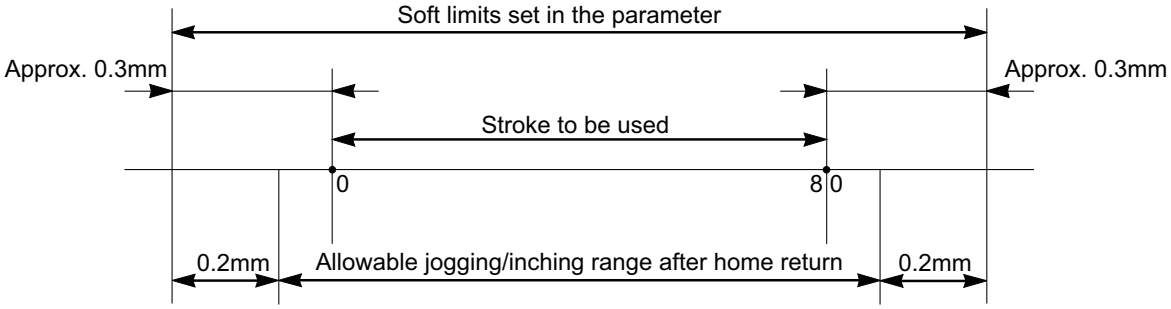

Alarm Code 0D9 “Soft Limit Over Error” will be generated when the set value exceeded the value (0 when shipped out) set in Parameter No.88 “Software Limit Margin”. Unless setting is established in Parameter No.88 (setting at delivery is 0), the setting in this parameter will be the threshold for Alarm Code 09D “Soft Limit Over Error”.

(3) Home return direction (Parameter No.5)

No.	Name	Symbol	Unit	Input Range	Default factory setting
5	Home return direction	ORG	–	0: Reverse 1: Forward	In accordance with actuator

Unless there is an indication of home-reversed type (option), the direction of the home return for the straight axis is located on the motor side. [Refer to the coordinate system of the actuator.]
If it becomes necessary to reverse the home direction after the actuator is installed on the machine, change the setting.

⚠ Caution: The home direction cannot be changed for the rod type actuators.

(4) Press & hold stop judgment period (Parameter No.6)

No.	Name	Symbol	Unit	Input Range	Default factory setting
6	Press & hold stop judgment period	PSWT	msec	0 to 9999	255

Judging completion of pressing operation

(1) The operation monitors the torque (current limit value) in percent in “Pressing” of the position table and turns pressing complete signal PEND ON when the load current satisfies the condition shown below during pressing. PEND is turned ON at satisfaction of the condition if the work is not stopped.
(Accumulated time in which current reaches pressing value [%])
– (accumulated time in which current is less than pressing value [%])
≥ 255 ms (Parameter No.6)

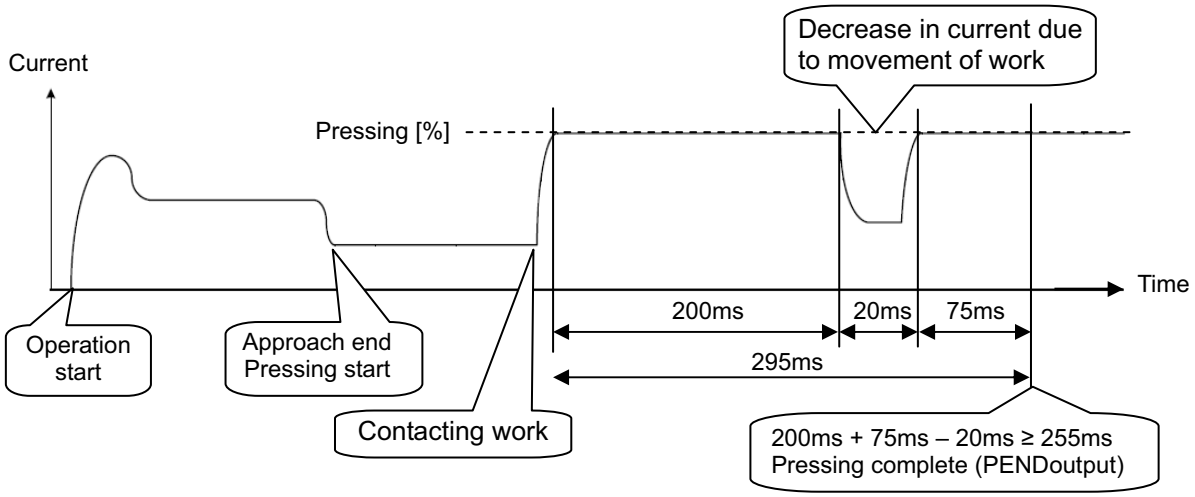

(5) Servo gain number (Parameter No.7)

No.	Name	Symbol	Unit	Input Range	Default factory setting
7	Servo gain number	PLGO	–	0 to 31	In accordance with actuator

The servo gain is also called position loop gain or position control system proportion gain. The parameter defines the response when a position control loop is used. Increasing the set value improves the tracking performance with respect to the position command. However, increasing the parameter value excessively increases the chances of overshooting.
When the set value is too low, the follow-up ability to the position command is degraded and it takes longer time to complete the positioning.
For a system of low mechanical rigidity or low natural frequency (every object has its own natural frequency), setting a large servo gain number may generate mechanical resonance, which then cause not only vibrations and/or noises but also overload error to occur.

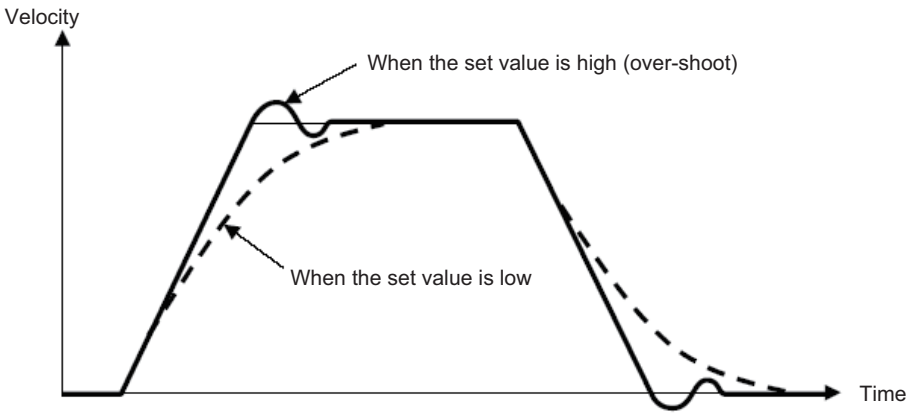

(6) Default velocity (Parameter No.8)

No.	Name	Symbol	Unit	Input Range	Default factory setting
8	Default velocity	VCMD	mm/s	1 to Actuator's max. velocity	Rated actuator speed

The factory setting is the rated velocity of the actuator.
When a target position is set in an unregistered position table, the setting in this parameter is automatically written in the applicable position number.
It is convenient to set the velocity often used.

(7) Default acceleration/deceleration (Parameter No.9)

No.	Name	Symbol	Unit	Input Range	Default factory setting
9	Default acceleration/deceleration	ACMD	G	0.01 to actuator's max. acceleration/ deceleration	Rated actuator's acceleration/ deceleration

The factory setting is the rated acceleration/deceleration of the actuator.
When a target position is set in an unregistered position table, the setting in this parameter is automatically written in the applicable position number.
It is convenient to set the acceleration/deceleration often used.

(8) Default positioning width (in-position width) (Parameter No.10)

No.	Name	Symbol	Unit	Input Range	Default factory setting
10	Default positioning width	INP	mm	0.01(Note 1) to 999.99	0.10

When a target position is set in an unregistered position table, the setting in this parameter is automatically written in the applicable position number. When the remaining moving distance enters into this width, the positioning complete signal PEND/INP is output.
It is convenient to set the positioning width often used.
Note 1 It is down to the minimum positioning width (L = Lead length/800).

(9) Current-limiting value at standstill during positioning (Parameter No.12)

No.	Name	Symbol	Unit	Input Range	Default factory setting
12	Current-limiting value at standstill during positioning	SPOW	%	1 to 70	35

By increasing the number, the retaining torque at a stop increases.
It is not necessary to change this setting in normal use, however, it is possible to block the movement caused by external force by increasing the setting number when large external force is applied at a stop. However, there is a risk that motor or controller may burn if the setting is too high. Contact us if a change is required.

(10) Current-limiting value during home return (Parameter No.13)

No.	Name	Symbol	Unit	Input Range	Default factory setting
13	Current-limiting value during home return	ODPW	%	1 to 100	In accordance with actuator

The factory setting conforms to the standard specification of the actuator.
Increasing this setting will increase the home return torque.
It is not necessary to change this setting in normal use, however, home-return operation may complete in front of the proper point in some cases depending on how it is installed or load is attached when the product is vertically mounted. It is necessary to increase the setting value in such cases. Other causes can also be considered, so contact us in advance to making a change.

(11) Pause input disable (Parameter No.15)

No.	Name	Symbol	Unit	Input Range	Default factory setting
15	Pause input disable	FPIO	–	0 : Enabled 1 : Disabled	0

This parameter defines whether the pause input signal is disabled or enabled.
Set to “1” if pause by PIO is not to be performed.
Pause by PIO Signal cannot be performed if the setting is disable.
Also, operation becomes available with no pause signal input being connected.

Set Value	Description
0	Enable (Use the input signal)
1	Disable (Does not use the input signal)

(12) SIO communication speed (Parameter No.16)

No.	Name	Symbol	Unit	Input Range	Default factory setting
16	SIO communication speed	BRSL	bps	9600 to 230400	38400

Set the SIO baud rate for the startup.
Set an appropriate value in accordance with the communication speed of the host.
Communication speed can be set from 9600, 14400, 19200, 28800, 38400, 76800, 115200 or 230400bps.

> ⚠ Caution: After the PC software is connected, the baud rate setting is changed to that of the PC software. To make effective the value set in the parameter, turn off the power once and on it again.

(13) Minimum delay time for slave transmitter activation (Parameter No.17)

No.	Name	Symbol	Unit	Input Range	Default factory setting
17	Minimum delay time for slave transmitter activation	RTIM	msec	0 to 255	5

In this setting, set the time from receiving the command (received data) during the SIO communication till the response (sent data) is returned

(14) Servo ON input disable (Parameter No.21)

No.	Name	Symbol	Unit	Input Range	Default factory setting
21	Servo ON input disable	FPIO	–	0 : Enabled 1 : Disabled	0

This parameter defines whether the servo ON input signal is disabled or enabled.
Set this parameter to “1” if servo ON/OFF is not provided by PIO signals.
When the servo ON input signal is disabled, the servo is turned ON as soon as the controller power is turned ON.
Also, operation becomes available with no servo-on signal input being connected.

Set Value	Description
0	Enable (Use the input signal)
1	Disable (Does not use the input signal)

(15) Home return offset level (Parameter No.22)

No.	Name	Symbol	Unit	Input Range	Default factory setting
22	Home return offset level	OFST	mm	0.00 to 9999.99	In accordance with actuator

In this setting can set the distance from the mechanical end to the home position.
An adjustment is available for the following cases.

1) Want to match the actuator home position and the mechanical origin of the system.
2) Want to set a new home after reversing the factory-set home direction.
3) Want to eliminate a slight deviation from the previous home position generated after replacing the actuator.

[Adjustment Process]

1) Homing execution
2) Offset check
3) Parameter setting change
4) After the setting, repeat home return several times to confirm that the actuator always returns to the same home position.

⚠ Caution :
- Soft limit takes the home position as the datum. Therefore, when a change is made to the value of home-return offset level, also revise the value for soft limit.
- If the home return offset has been changed, the soft limit parameters must also be adjusted accordingly.
  Do not set a smaller value than the initial setting value for Home Return Offset. Normal excitation detection cannot be performed, and there may be a risk of generating the excitation detection error or causing abnormal noise.
  In case the there is a necessity of setting a value less than the initial setting, contact IAI.

(16) Zone 2+, Zone 2- (Parameter No.23, No.24)

[Refer to 6.3.1 [2] (1).]

(17) PIO pattern selection (Parameter No.25)

No.	Name	Symbol	Unit	Input Range	Default factory setting
25	PIO pattern selection	IOPN	–	0 to 5	0 (Standard Type)

Select the PIO operation pattern in Parameter No.25.
For the details of PIO patterns, refer to 4.2 Operation in Positioner Mode.

[For Positioner Mode 1]

Type	Value set in parameter No.25	Mode	Overview
PIO Pattern 0	0 (at the delivery)	8-point type	• Number of positioning points : 8 points • Position command : binary code • Zone signal output*1 : 1 point
PIO Pattern 1	1	3-point type (Solenoid valve type)	• Number of positioning points : 3 points • Position command : Individual number signal ON • Zone signal output : None
PIO Pattern 2	2	16-point type	• Number of positioning points : 16 points • Position command : binary code • Position zone signal output*2 or Zone signal output*1 : 1 point (Note 1)

*1 Zone signal output : Zone range is to be set to either Parameter No.1, 2 and it is always available after the home-return operation is complete.

*2 Position zone signal output : This feature is associated with the specified position number. The zone range is set in the position table. The zone range is enabled only when the position is specified but disabled if another position is specified.

Note 1 The position zone signal output can be switched over to the zone signal output with the setting of Parameter No.149.

[For Positioner Mode 2]

Type	Value set in parameter No.25	Mode	Overview
PIO Pattern 0	0 (at the delivery)	Positioning mode (Standard type)	• Number of positioning points : 64 points • Position command : binary code • Zone signal output*1 : 1 point • Position zone signal output*2 : 1 point (Note 1)
PIO Pattern 1	1	Teaching mode (Teaching type)	• Number of positioning points : 64 points • Position command : binary code • Position zone signal output*2 : 1 point (Note 1) • Writing current position data to position table enabled by PIO signal
PIO Pattern 2	2	256-point mode (Number of positioning points : 256-point type)	• Number of positioning points : 256 points • Position command : binary code • Position zone signal output*2 : 1 point (Note 1)
PIO Pattern 3	3	512-point mode (Number of positioning points : 512-point type)	• Number of positioning points : 512 points • Position command : binary code • Zone signal output : None
PIO Pattern 4	4	Solenoid valve mode 1 (7-point type)	• Number of positioning points : 7 points • Position command : Individual number signal ON • Zone signal output*1 : 1 point • Position zone signal output*2 : 1 point (Note 1)
PIO Pattern 5	5	Solenoid valve mode 2 (3-point type)	• Number of positioning points : 3 points • Position command : Individual number signal ON • Completion signal : Signal equivalent to LS (limit switch) enabled • Zone signal output*1 : 1 point • Position zone signal output*2 : 1 point (Note 1)

*1 Zone signal output : Zone range is to be set to either Parameter No.1, 2 or No.23, 24 (Note 1) and it is always available after the home-return operation is complete.

*2 Position zone signal output : This feature is associated with the specified position number. The zone range is set in the position table. The zone range is enabled only when the position is specified but disabled if another position is specified.

Note 1 The position zone signal output can be switched over to the zone signal output with the setting of Parameter No.149.

(18) PIO jog velocity (Parameter No.26), PIO jog velocity 2 (Parameter No.47)

No.	Name	Symbol	Unit	Input Range	Default factory setting
26	PIO jog velocity	IOJV	mm/s	1 to Actuator's max. speed	100
47	PIO jog velocity 2	IOV2	mm/s	1 to Actuator's max. speed	100

This is the setting of JOG operation speed by PIO signal when PIO Pattern 1 is selected in Positioner Mode 2.
Set the appropriate value considering how the system is to be used.
The maximum speed is limited to 250mm/s.
Note 1 Parameter No.47 "PIO jog velocity 2" is not used.

(19) Movement command type (Parameter No.27)

No.	Name	Symbol	Unit	Input Range	Default factory setting
27	Movement command type	FPIO	–	0 : Level 1 : Edge	0

This is the parameter enable in the operation modes and PIO patterns shown in the table below. It is able to change the start signals ST0 to ST* from level to edge treatment.

Operating Mode	Parameter No.25 PIO Pattern Selection	Start Signal
Positioner Mode 1	1	ST0 to 2
Positioner Mode 2	4	ST0 to 6
	5	ST0 to 2

Set Value	Input method	Description
0	Level	The actuator starts moving when the input signal turns ON. When the signal turns OFF during movement, the actuator will decelerate to a stop and complete its operation.
1	Edge	The actuator starts moving when the rising edge of the input signal is detected. The actuator will not stop when the signal turns OFF during the movement, until the target position is reached.

[Level System]

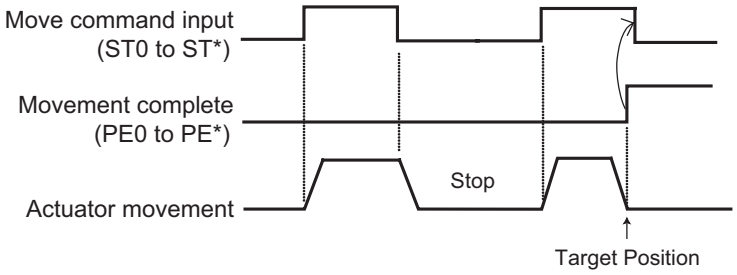

[Edge System]

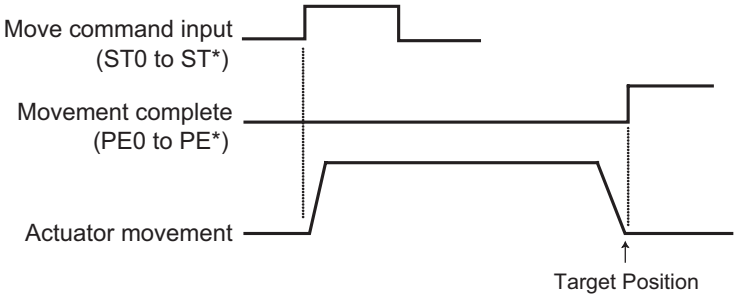

(20) Default movement direction for excitation-phase signal detection (Parameter No.28)

No.	Name	Symbol	Unit	Input Range	Default factory setting
28	Default movement direction for excitation-phase signal detection	PHSP	–	0 : Reversed direction 1 : Forward direction	In accordance with actuator

Excitation phase signal detection(Note 1) is executed at the first servo-on after the power is supplied. Detection direction at this time is determined. Define the detection direction at this time.
Even though it is generally unnecessary to change this setting, set this to the direction which the motor is easy to move when the actuator interferes with the mechanical end or peripheral object at the time the power is supplied.
If the direction not interfering is the same direction as the home return direction, set the same values as set to Parameter No.5 Home Return Direction. If the direction is opposite, set the other values from Parameter No.5. (If No.5 is 0, set 1. If No.5 is 1, set 0.)
Note 1 In Simple Absolute Type, the 2nd excitation phase signal detection is executed at the home-return operation complete to establish the absolute home point.

(21) Excitation-phase signal detection time (Parameter No.29)

No.	Name	Symbol	Unit	Input Range	Default factory setting
29	Excitation-phase signal detection time	PHSP	msec	1 to 999	In accordance with actuator

Excitation phase signal detection(Note 1) is executed at the first servo-on after the power is supplied. Detection direction at this time is determined. Define the detection direction at this time.
It is not necessary to change this parameter in normal use, however, there are some cases that adjustment of this parameter is enable for recovery when a problem such as the excitation phase signal detection error or operation error is generated.
Contact us if it is necessary to change this parameter.
Note 1 In Simple Absolute Type, the 2nd excitation phase signal detection is executed at the home-return operation complete to establish the absolute home point.

(22) Excitation detection type (Parameter No.30)

No.	Name	Symbol	Unit	Input Range	Default factory setting
30	Excitation detection type	PHSP	–	0 : Conventional method 1 : New method 1 (For vertical mount installation) 2 : New method 2 (For horizontal mount installation)	0

Excitation phase signal detection(Note 1) is executed at the first servo-on after the power is supplied, and in the new method, we succeeded to make this operation smoother and quieter than ever (when compared in IAI products).
There is a risk that the slider or rod may drop at the excitation phase signal detection if setting to “2” (New Method 1) and installing the actuator in vertical mount. Establish the setting considering the posture of the installation. When the actuator is installed vertically, and if the slide or rod drops, set to “0” (Basic Method).
Note 1 In Simple Absolute Type, the excitation detection is executed at the home-return operation complete.

(23) Velocity loop proportional gain (Parameter No.31)

No.	Name	Symbol	Unit	Input Range	Default factory setting
31	Velocity loop proportional gain	VLPG	–	1 to 27661	In accordance with actuator

This becomes enable when the setting of Gain Scheduling (Parameter No.144) and the high output setting (Parameter No.152) are set disable.
[Refer to 6.2 High Output Setting and Gain Scheduling Function]

This parameter determines the response of the speed control loop. When the set value is increased, the follow-up ability to the velocity command becomes better (the servo-motor rigidity is enhanced). The higher the load inertia becomes, the larger the value should be set. However, excessively increasing the setting will cause overshooting or oscillation, which facilitates producing the vibrations of the mechanical system.

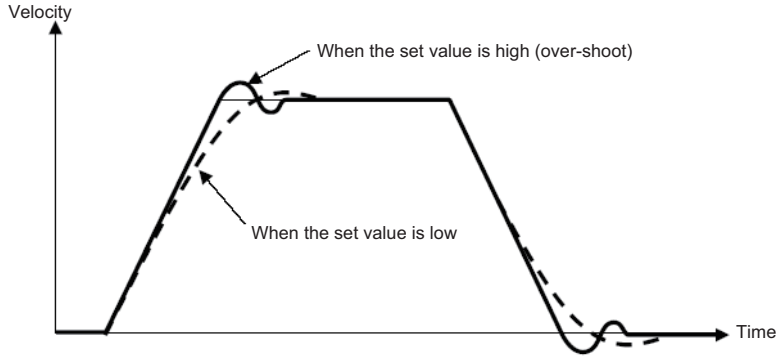

(24) Velocity loop integral gain (Parameter No.32)

No.	Name	Symbol	Unit	Input Range	Default factory setting
32	Velocity loop integral gain	VLPT	–	1 to 217270	In accordance with actuator

This becomes enable when the setting of Gain Scheduling (Parameter No.144) and the high output setting (Parameter No.152) are set disable.
[Refer to 6.2 High Output Setting and Gain Scheduling Function]

Any machine produces friction. This parameter is intended to cope with deviation generated by external causes including friction. Increasing the setting value improves the reactive force against load change. That is, the servo rigidity increases. However, increasing the parameter value excessively may make the gain too high, which then cause the machine system to be vibrated due to over-shoot or shaking.
Tune it to obtain the optimum setting by watching the velocity response.

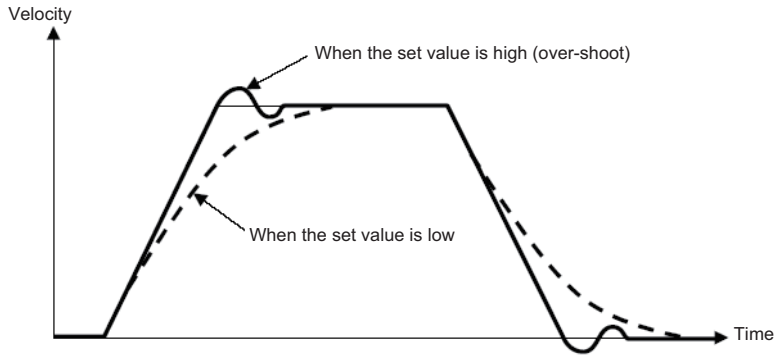

(25) Torque filter time constant (Parameter No.33)

No.	Name	Symbol	Unit	Input Range	Default factory setting
33	Torque filter time constant	TRQF	–	0 to 2500	In accordance with actuator

This parameter decides the filter time constant for the torque command. When vibrations and/or noises occur due to mechanical resonance during operation, this parameter may be able to suppress the mechanical resonance. This function is effective for torsion resonance of ball screws (several hundreds Hz).

(26) Press velocity (Parameter No.34)

No.	Name	Symbol	Unit	Input Range	Default factory setting
34	Press velocity	PSHV	mm/s	1 to actuator's max. pressing speed	In accordance with actuator

This is the parameter to set the velocity in pressing operation.
If a change to the setting is required, make sure to have the setting below the maximum pressing velocity of the actuator. Setting it fast may disable to obtain the specified pressing force. Also when setting at a low velocity, take 5mm/s as the minimum.

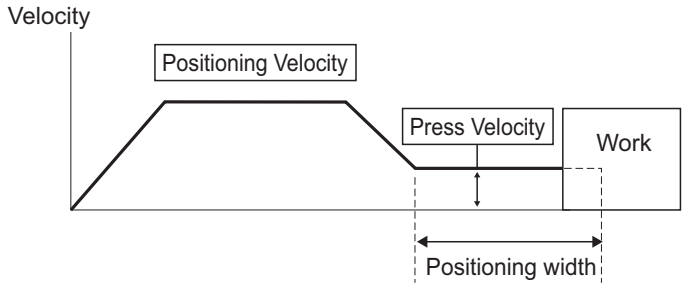

⚠ Caution: If the velocity of the positioning of the position table is set below this parameter, the pressing speed will become the same as the positioning speed.

(27) Safety velocity (Parameter No.35)

No.	Name	Symbol	Unit	Input Range	Default factory setting
35	Safety velocity	SAFV	mm/s (deg/s)	1 to 250 (below maximum speed)	100

This is the parameter to set the maximum speed of manual operation while the safety velocity selected in the teaching tool. Do not have the setting more than necessary.

(28) Auto servo motor OFF delay time 1, 2, 3 (Parameter No.36, No.37, No.38)

No.	Name	Symbol	Unit	Input Range	Default factory setting
36	Auto servo motor OFF delay time 1	ASO1	sec	0 to 9999	0
37	Auto servo motor OFF delay time 2	ASO2	sec	0 to 9999	0
38	Auto servo motor OFF delay time 3	ASO3	sec	0 to 9999	0

Set the duration before the servo turns OFF after positioning process is complete when the power saving function is used.
[Refer to Chapter 5 Power-saving Function.]

(29) Position complete signal output method (Parameter No.39)

No.	Name	Symbol	Unit	Input Range	Default factory setting
39	Position complete signal output method	FPIO	–	0: PEND 1: INP	0

It is valid when a mode other than PIO Pattern 1 = 3-point type [Solenoid Valve Type] in Positioner Mode 1 and PIO Pattern = 5 (Solenoid Valve Type 2 [3-point type]) in Positioner Mode 2 is being selected.

Select the type of positioning complete signal. There are two types of positioning complete signals, PEND and INP, and the condition of being OFF differs for each type. Select the suitable one considering the control method.
Check each control method for operation in “Chapter 4 Operation” for details.

Setting	Signal Name	Description
0	PEND	● Turns ON if in positioning complete condition ● Remains ON even if current position is out of positioning width after positioning is complete ● Turns OFF during a pause no matter of moving/stopping ● Turns OFF during servo-off with no exception
1	INP	Turns ON when current position is in the positioning width of indicated position number, and OFF when out of positioning width

Complete position No. outputs PM1 to PM** and current position No. outputs PE0 to PE6 are issued in the similar way.

(30) Home-return input disable (Parameter No.40)

No.	Name	Symbol	Unit	Input Range	Default factory setting
40	Home-return input disable	FPIO	–	0 : Enabled 1 : Disabled	0

This parameter defines whether the home return input signal is disabled or enabled.
Normally this parameter need not be changed.

Set Value	Description
0	Enable (Use the input signal)
1	Disable (Does not use the input signal)

(31) Enable function (Parameter No.42)

No.	Name	Symbol	Unit	Input Range	Default factory setting
42	Enable function	FPIO	–	0 : Enabled 1 : Disabled	1

Set valid/invalid the deadman switch function if the teaching pendant is equipped with a deadman switch.

Set Value	Description
0	Enable (Use the input signal)
1	Disable (Does not use the input signal)

(32) Silent interval magnification (Parameter No.45)

No.	Name	Symbol	Unit	Input Range	Default factory setting
45	Silent interval magnification	SIVM	times	0 to 10	0

It is not necessary to change the parameter if a teaching tool such as PC software is to be used.

(33) Velocity override (Parameter No.46)

No.	Name	Symbol	Unit	Input Range	Default factory setting
46	Velocity override	OVRD	%	0 to 100	100

When move commands are issued from the PLC, the moving speed set in the “Velocity” field of the position table can be overridden by the value set by this parameter.
Actual movement velocity = [Velocity set in the position table] × [setting value in Parameter No.46]
Example) Value in the “Velocity” field of the position table: 500mm/s
Setting in Parameter No.46 20%
In this case, the actual movement speed becomes 100mm/s.
The minimum setting unit is 1% and the input range is 1 to 100%.
(Note) This parameter is ignored for move commands from a teaching tool such as PC software.

(34) PIO jog velocity 2 (Parameter No.47)

[Refer to Parameter No.26 PIO jog velocity]

(35) PIO inch distance, PIO inch distance 2 (Parameter No.48, No.49)

No.	Name	Symbol	Unit	Input Range	Default factory setting
48	PIO inch distance	IOID	mm	0.01 to 1.00	0.1
49(Note1)	PIO inch distance 2	IOD2	mm	0.01 to 1.00	0.1

Set the inching distance for the inching input command from PLC when PIO Pattern = 1 (Teaching Mode) is selected in Positioner Mode 2.
The maximum allowable value is 1 mm.
Note 1 Parameter No.49 “PIO inch distance 2” is not used.

(36) Load output judgment time period (Parameter No.50)

No.	Name	Symbol	Unit	Input Range	Default factory setting
50	Load output judgment time period	LDWT	msec	0 to 9999	255

This parameter is not used.

(37) Torque inspected range (Parameter No.51)

No.	Name	Symbol	Unit	Input Range	Default factory setting
51	Torque inspected range	TRQZ	–	0 : Enabled 1 : Disabled	0

This parameter is not used.

(38) Default acceleration/deceleration mode (Parameter No.52)

No.	Name	Symbol	Unit	Input Range	Default factory setting
52	Default acceleration/deceleration mode	CTLF	–	0 to 2	0 (Trapezoid)

These values are automatically set to “Acceleration/Deceleration Mode” of the applicable position number when the target position is written to the unregistered position table.

Set Value	Description
0	Trapezoid
1	S-motion
2	Primary delay filter

(39) Default stop mode (Parameter No.53)

No.	Name	Symbol	Unit	Input Range	Default factory setting
53	Default stop mode	CTLF	–	0 to 7	0 (Does not use)

This parameter defines the power-saving function. [Refer to Chapter 5 Power-saving Function.]

(40) Position-command primary filter time constant (Parameter No.55)

No.	Name	Symbol	Unit	Input Range	Default factory setting
55	Position-command primary filter time constant	PLPF	msec	0.0 to 100.0	0

Use this in the case to set the value in “Acceleration/Deceleration” box in the position table to 2 “1-step delay filter”, or in the case that there is no acceleration/deceleration function the host controller in Pulse Train Control Mode.
The primary delay filter is disabled if “0” is set.
The greater the setting value is, the longer the delay is and the slower the acceleration/deceleration is. Even though the impact at acceleration and deceleration are reduced, longer time is required especially for the operation end, thus the cycle time will be extended.
Refer to 4.3 [9] (1) Position command primary filter time constant for the details of Pulse Train Control Mode.

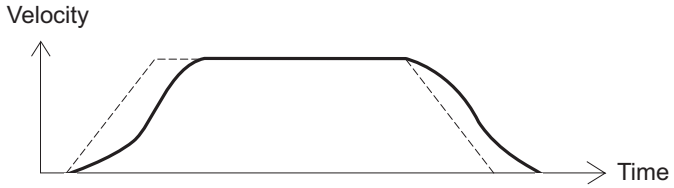

(41) S-motion rate (Parameter No.56)

No.	Name	Symbol	Unit	Input Range	Default factory setting
56	S-motion rate	SCRV	%	0 to 100	0

This parameter is used when the value in the “Acceleration/deceleration mode” field of the position table is set to “1 [S-motion]”.
This enables to ease the impact at acceleration and deceleration without making the takt time longer.

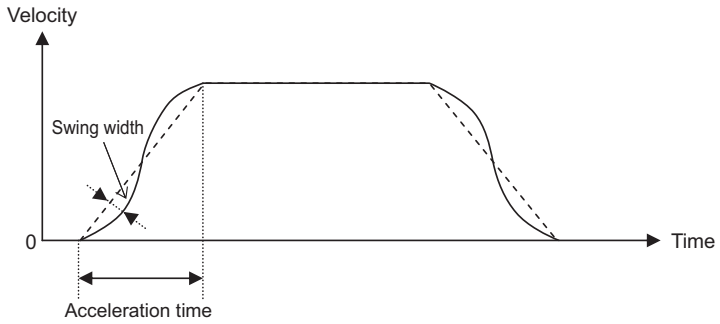

The S-motion is a sine curve that has the acceleration time as 1 cycle.
The level of its swing width can be set by this parameter.

Setting of Parameter No.56 [%]	Level of swing width
0 [Set in delivery]	No S-motion (Dotted line shown in the image below)
100	Sine curve swing width × 1 (Double-dashed line shown in the image below)
50	Sine curve swing width × 0.5 (Dashed line shown in the image below)
10	Sine curve swing width × 0.1 (Solid line shown in the image below)

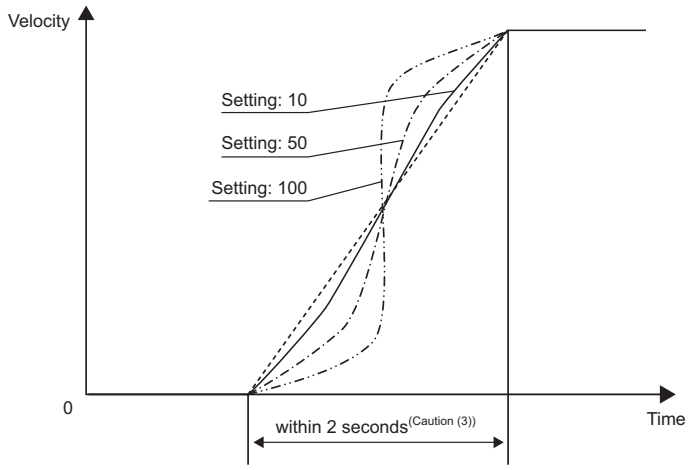

⚠ Caution: 1) If the S-motion is specified in acceleration/deceleration mode, executing position command or direct value command while the actuator is moving causes an actuator to move along the trapezoid pattern. To change a speed during operation, be sure to specify such a position command while the actuator is in pause state.
2) If acceleration time or deceleration time exceeds 2 seconds, do not specify S-motion control. The actuator will fail to operate normally.
3) Do not perform temporary stop during acceleration or deceleration. The speed change (acceleration) may cause the dangerous situation.

(42) Torque limit (Parameter No.57)

This parameter is exclusively used for the pulse-train control mode.
[Refer to Chapter 4, 4.3 Operation in Pulse Train Control Mode, [9] Parameter Settings Required for Advanced Operations]

(43) Deviation clear at servo OFF & alarm stop (Parameter No.58)

This parameter is exclusively used for the pulse-train control mode.
[Refer to Chapter 4, 4.3 Operation in Pulse Train Control Mode, [9] Parameter Settings Required for Advanced Operations]

(44) Deviation error monitor during torque limiting (Parameter No.59)

This parameter is exclusively used for the pulse-train control mode.
[Refer to Chapter 4, 4.3 Operation in Pulse Train Control Mode, [9] Parameter Settings Required for Advanced Operations]

(45) Deviation counter clear input (Parameter No.60)

This parameter is exclusively used for the pulse-train control mode.
[Refer to Chapter 4, 4.3 Operation in Pulse Train Control Mode, [9] Parameter Settings Required for Advanced Operations]

(46) Torque limit command input (Parameter No.61)

This parameter is exclusively used for the pulse-train control mode.
[Refer to Chapter 4, 4.3 Operation in Pulse Train Control Mode, [9] Parameter Settings Required for Advanced Operations]

(47) Pulse count direction (Parameter No.62)

This parameter is exclusively used for the pulse-train control mode.
[Refer to Chapter 4, 4.3 Operation in Pulse Train Control Mode, [9] Parameter Settings Required for Advanced Operations]

(48) Command pulse input mode (Parameter No.63)

This parameter is exclusively used for the pulse-train control mode.
[Refer to Chapter 4, 4.3 Operation in Pulse Train Control Mode, [9] Parameter Settings Required for Advanced Operations]

(49) Command pulse input mode polarity (Parameter No.64)

This parameter is exclusively used for the pulse-train control mode.
[Refer to Chapter 4, 4.3 Operation in Pulse Train Control Mode, [9] Parameter Settings Required for Advanced Operations]

(50) Electronic gear numerator (Parameter No.65)

This parameter is exclusively used for the pulse-train control mode.
[Refer to Chapter 4, 4.3 Operation in Pulse Train Control Mode, [9] Parameter Settings Required for Advanced Operations]

(51) Electronic gear denominator (Parameter No.66)

This parameter is exclusively used for the pulse-train control mode.。
[Refer to Chapter 4, 4.3 Operation in Pulse Train Control Mode, [9] Parameter Settings Required for Advanced Operations]

(52) Compulsory stop input (Parameter No.67)

This parameter is exclusively used for the pulse-train control mode.。
[Refer to Chapter 4, 4.3 Operation in Pulse Train Control Mode, [9] Parameter Settings Required for Advanced Operations]

(53) Position feed forward gain (Parameter No.71)

No.	Name	Symbol	Unit	Input Range	Default factory setting
71	Feed forward gain	PLFG	–	0 to 100	0

This parameter defines the level of feed forward gain to be applied to position control. Setting this parameter allows the servo gain to be increased and the response of the position control loop to be improved. This is the parameter to improve the takt time and traceability even more after fine-tuning the settings for “Servo Gain Number (Parameter No.7)”, “Velocity Loop Proportional Gain (Parameter No.31)”, “BU velocity loop proportional gain (Parameter No.153)”, “GS velocity loop proportional gain (Parameter No.145)” etc. This can result in shorter positioning time.
The gain adjustment of position, speed and current loop in feedback control can directly change the response of the servo control system. Thus, improper adjustment may cause the control system to be unstable and further vibrations and/or noises to occur. On the other hand, since this parameter only changes the speed command value and does not relate with the servo loop, it neither makes the control system unstable nor generate continuous vibrations and/or noises. However, excessive setting may generate vibrations and/or noises until the machine can follow command values in every operation.

In the trapezoidal pattern, adding the value resulting from multiplying the speed command by the feed forward gain to the speed command can reduce the delay of speed follow-up and the position deviation.

The feedback control providing control in accordance with the result causes control delay to occur. In contrast, compensative control is available that is not dependent on control delay.

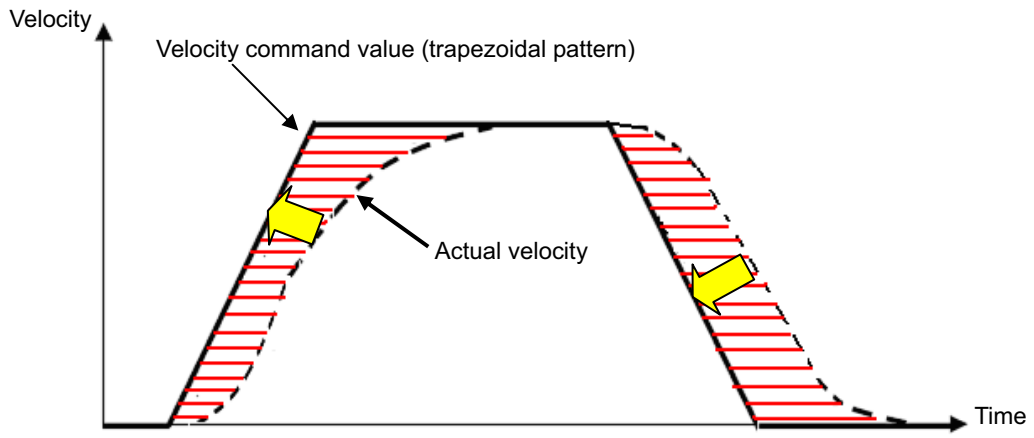

(54) Ball screw lead length (Parameter No.77)

No.	Name	Symbol	Unit	Input Range	Default factory setting
77	Ball screw lead length	LEAD	mm	0.01 to 999.99	In accordance with actuator

This parameter set the ball screw lead length.
The factory setting is the value in accordance with the actuator characteristics.

> ⚠ Caution: If it is not suited to the actuator specifications, not only that operation cannot be performed with the indicated speed, acceleration/deceleration or movement amount, but also it may generate an alarm or cause malfunction.

(55) Absolute unit (Parameter No.83)

No.	Name	Symbol	Unit	Input Range	Default factory setting
83	Absolute unit	ETYP	–	0: Incremental 1: Simple Absolute Type	0

Set to 1 if simple absolute type and 0 if others.

(56) Software limit margin (Parameter No.88)

No.	Name	Symbol	Unit	Input Range	Default factory setting
88	Software limit margin	SLMA	mm	0 to 9999.99	0

This is the parameter to set the amount of over error detection against the soft limit errors set in Parameters No.3 and No.4.
It is not necessary to change the setting in normal use.

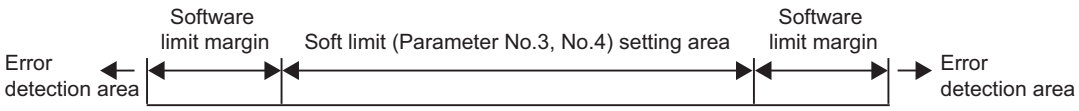

(57) Current limit value at stopping due to miss-pressing (Parameter No.91)

No.	Name	Symbol	Unit	Input Range	Default factory setting
91	Current limit value at stopping due to miss-pressing	PSFC	–	0: Current limiting value at stop 1: Current limit value during pressing	0

This parameter defines the restricted current value at stopping due to miss-pressing.
Servo-lock is executed following this setting until the next movement command.

Parameter No.91	Description
0	Current limitation value while in operation stop (setting value in the current limiting value at positioning stop (Parameter No.12))
1	Press-motion current-limiting value

(58) Stop method at servo OFF (Parameter No.110)

No.	Name	Symbol	Unit	Input Range	Default factory setting
110	Stop method at servo OFF	PSOF	–	0: Rapid stop 1: Deceleration to stop	0

Select the stop method of when the servo is turned OFF during an operation. If 1 is selected, the actuator decelerates with position data in execution and stops.

(59) Calendar function (Parameter No.111)

No.	Name	Symbol	Unit	Input Range	Default factory setting
111	Calendar function	FRTC	–	0: Unused 1: Use	1

Select use/not use of the calendar function (RTC) in PIO converter.
Set the current time with using a teaching tool when the calendar function is used.
[Refer to the instruction manual of the teaching tool for the details.]
In use of RTC, the alarm occurrence time in the alarm list is the time at which an alarm has occurred.
If RTC is not in use, the alarm generated time in the alarm list shows the time passed since 0sec that is the time the power is supplied to the controller.

Set Value	Description
0	Unused
1	Use

(60) Monitoring mode (Parameter No.112)

No.	Name	Symbol	Unit	Input Range	Default factory setting
112	Monitoring mode	FMNT	–	0: Does not use 1: Monitor function 1 2: Monitor function 2	0

The controller can be connected with PC software to monitor the servo.
This parameter allows you to select a monitoring mode function (servo monitor).
Check the Instruction Manual of the RC PC software for details.

Set Value	Description
0	Unused
1	Sets the 4CH record mode.
2	Sets the 8CH record mode.

(61) Monitoring period (Parameter No.113)

No.	Name	Symbol	Unit	Input Range	Default factory setting
113	Monitoring period	FMNT	msec	1 to 100	1

Establish the setting for the sampling cycle (for time frequency to gather data) when the monitoring mode is selected.
By making this parameter bigger, the sampling cycle becomes longer.
It is set to 1ms in the initial setting. Setting can be established in 1ms unit up to 100ms.

1ms frequency setting	100ms frequency setting
At 4CH Record Mode: Max. Obtainable Time 1.5sec	At 4CH Record Mode: Max. Obtainable Time 150sec
At 8CH Record Mode: Max. Obtainable Time 0.75sec	At 8CH Record Mode: Max. Obtainable Time 75sec

(62) Overload level ratio (Parameter No.143)

No.	Name	Symbol	Unit	Input Range	Default factory setting
143	Overload level ratio	OLWL	%	50 to 100	100

This parameter is not used.

(63) Gain scheduling upper limit multiplying ratio (Parameter No.144)

No.	Name	Symbol	Unit	Input Range	Default factory setting
144	Gain scheduling upper limit multiplying ratio	GSUL	%	0 to 1023	0 (Disabled)

Gain scheduling is the function to change the gain in accordance with the operation speed.
This parameter shows the multiplying rate of the upper limit of the changeable gain.
With the set multiplying rate, the values for GS Velocity Loop Proportional Gain (Parameter No.145) and GS Velocity Loop Integrated Gain (Parameter No.146) are changed.

Set Value	Description
100 or less	Gain scheduling disabled
101 to 1023	Gain scheduling enabled Set to 300 if enable

(64) GS velocity loop proportional gain (Parameter No.145)

No.	Name	Symbol	Unit	Input Range	Default factory setting
145	GS velocity loop proportional gain	GSPC	–	1 to 30000	750

If the gain scheduling upper limit multiplying ratio (Parameter No.144) is set enabled, this parameter setting becomes enable for the velocity loop proportional gain.
It is not necessary to change the setting in normal use.

(65) GS velocity loop integral gain (Parameter No.146)

No.	Name	Symbol	Unit	Input Range	Default factory setting
146	GS velocity loop integral gain	GSIC	–	1 to 500000	4500

If the gain scheduling upper limit multiplying ratio (Parameter No.144) is set enabled, this parameter setting becomes enable for the velocity loop integral gain.
It is not necessary to change the setting in normal use.

(66) Total movement count threshold (Parameter No.147)

No.	Name	Symbol	Unit	Input Range	Default factory setting
147	Total movement count threshold	TMCT	Times	0 to 999999999	0 (Disabled)

Notice will be made with Movement Counter Threshold Exceeding Alarm (04E) if the total number of movement exceeds the value set in this parameter.
The judgment would not be made if the value is set to 0.

(67) Total operated distance threshold (Parameter No.148)

No.	Name	Symbol	Unit	Input Range	Default factory setting
148	Total operated distance threshold	ODOT	m	0 to 999999999	0 (Disabled)

Notice will be made with Movement Distance Threshold Exceeding Alarm (04F) if the total distance of movement exceeds the value set in this parameter.
The judgment would not be made if the value is set to 0.

(68) Zone output changeover (Parameter No.149)

No.	Name	Symbol	Unit	Input Range	Default factory setting
149	Zone output changeover	FPIO	–	0: Not to change 1: To change	0

The enable zone signals are determined by the setting of this parameter and the setting of Parameter No.25 “PIO Pattern Select”.
The relationship between the parameter settings and enable zone signal outputs are as shown in the table below.

Operating Mode	Parameter No.25 PIO Pattern Selection	Parameter No.149 Zone Output Changeover	
		0	1
Positioner Mode 1	0	ZONE1 no matter settings	
	1	There are no zone outputs	
	2	PZONE	ZONE1
Positioner Mode 2	0	ZONE1 PZONE	ZONE1 ZONE2
	1	PZONE	ZONE1
	2		
	3	There is no zone signal output	
	4	ZONE1 PZONE	ZONE1 ZONE2
	5		
Pulse Train Mode	There is no zone signal output		

(69) High output setting (Parameter No.152)

No.	Name	Symbol	Unit	Input Range	Default factory setting
152	High output setting	BUEN	–	0: Disable 1: Enable	1 (Enabled)

Establish the setting of enable/disable for the high output function.

(70) BU velocity loop proportional gain (Parameter No.153)

No.	Name	Symbol	Unit	Input Range	Default factory setting
153	BU velocity loop proportional gain	BUPC	–	1 to 10000	200

If the high output setting is set enabled, this parameter setting becomes enable for the velocity loop proportional gain.

This is the parameter to determine the responsiveness of the velocity loop. Setting bigger values provides more capacity to track the speed command (it is described as the servo stiffness gets higher). The higher the load inertia becomes, the larger the value should be set. Setting the value too large causes such problems as overshooting and vibration, which would make the mechanical components vibrate.

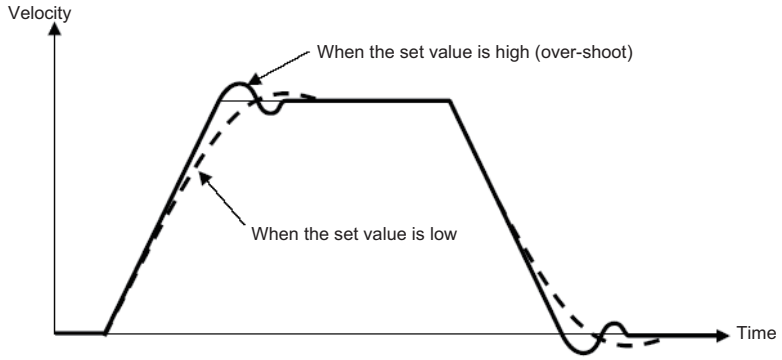

(71) BU velocity loop integral gain (Parameter No.154)

No.	Name	Symbol	Unit	Input Range	Default factory setting
154	BU velocity loop integral gain	BUIC	–	1 to 100000	4000

If the high output setting is set enabled, this parameter setting becomes enable for the velocity loop integrated gain.

Any machine produces friction. This parameter is intended to cope with deviation generated by external causes including friction. Setting bigger values provides more reinforced reaction force against the load fluctuation, thus higher servo stiffness. However, increasing the parameter value excessively may make the gain too high, which then causes the machine system to be vibrated due to overshoot or shaking.
Tune it to obtain the optimum setting by watching the velocity response.

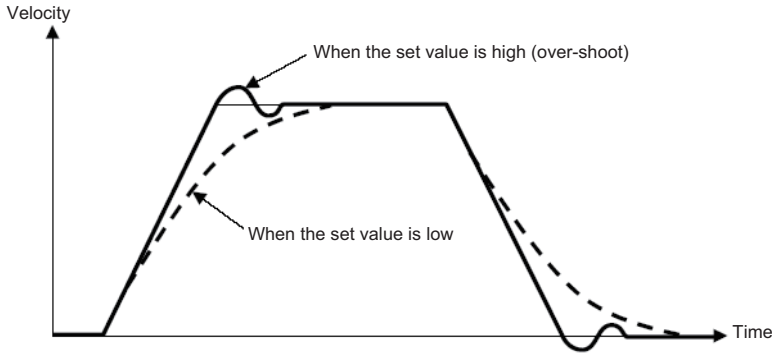

(72) Absolute battery retention time (Parameter No.155)

No.	Name	Symbol	Unit	Input Range	Default factory setting
155	Absolute battery retention time	AIP	days	0: 20 days 1: 15 days 2: 10 days 3: 5 days	0

For Simple Absolute Type, establish the setting to define how long the position information of the encoder is to be remained for after the power to the controller is turned OFF. Setting can be done from four grades. Maximum number of the motor revolution due to external force during the power is OFF is controlled by the set days. Establish the setting assuming the speed when the work transporting parts, slider or rod, on the actuator is moved by external force during the power being OFF. The position information will lose if the number of motor revolution exceeds the set value. Consider safety margin when establishing the setting.

Motor rotation [rpm] = Moved speed [mm/s] / Lead length [mm] × 60

Setting	Position information retaining day (reference)	Motor max. rotation speed (rpm)
0 (Initial setting)	20 days	100
1	15 days	200
2	10 days	400
3	5 days	800

(73) Torque check/Light malfunction output select (Parameter No.156)

No.	Name	Symbol	Unit	Input Range	Default factory setting
156	Torque check/Light malfunction output select	SLAL	–	0: Load judge output or torque level status signal output 1: Output of battery voltage drop warning or message-level alarm	0

This parameter is not used.

[3] Servo Adjustment

The parameters are preset at the factory before shipment so that the actuator operates stably within the rated (maximum) transportable weight.
However, the preset setting cannot always be the optimum load condition in the actual use. In such cases, servo adjustment may be required.
This section describes the basic servo adjustment method.

> ⚠ Caution: Rapid and excessive settings are dangerous. They may devices including the actuator to be damaged and/or people to be injured. Take sufficient note on the setting.
> Record settings during servo adjustment so that prior settings can always be recovered.
> When a problem arises and the solution cannot be found, please contact IAI.

<table>
<tr><th>No.</th><th>Situation that requires adjustment</th><th>How to Adjust</th></tr>
<tr><td rowspan="3">1</td><td>Takes time to finish positioning</td><td rowspan="3">● Set Parameter No.55 “Position command primary filter time constant” to “0” if it is set.
● Increase the value of Parameter No.7 “Servo gain number”. By setting a larger value, the follow-up ability to the position command becomes better. Set the value to any of 3 to 10 roughly or up to 15 at the maximum. If the value is too large, an overshoot is caused easily and may cause noise or vibration. For the velocity loop proportional gain parameter, the parameter number differs depending on the setting of enable/disable of Gain Scheduling and the high output setting.

Shown below is the table of velocity loop proportional gain parameter numbers that are enable.
<table>
<tr><th colspan="2"></th><th colspan="2">High Output Setting (Parameter No.152)</th></tr>
<tr><th colspan="2"></th><th>1 (Enable)</th><th>0 (Disable)</th></tr>
<tr><td rowspan="2">Gain Scheduling (Parameter No.144)</td><td>101 to (Enable)</td><td>Parameter No.145</td><td>Parameter No.145</td></tr>
<tr><td>to 101 (Disable)</td><td>Parameter No.153</td><td>Parameter No.31</td></tr>
</table></td></tr>
<tr><td>Positioning accuracy is not appropriate</td></tr>
<tr><td>Shorter takt time is desired</td></tr>
<tr><td>2</td><td>Vibration is generated at acceleration/deceleration</td><td>● The cause of the problem is excessive “acceleration/deceleration setting” or vulnerable structure of the unit on which the actuator is installed. If possible, reinforce the unit itself, first.
● Decrease the values of “acceleration/deceleration setting”.
● Decrease the number of Parameter No.7 “Servo gain number”. If the Parameter No.7 “Servo gain number” is too low, it takes long time to finish the positioning.</td></tr>
</table>

<table>
<tr><th>No.</th><th>Situation that requires adjustment</th><th>How to Adjust</th></tr>
<tr><td>3</td><td>Speed is uneven during the movement
Speed accuracy is not appropriate</td><td>

● Increase the value of “Velocity loop proportional gain”. By setting a larger value, the follow-up ability to the speed command becomes better.
Setting too large value makes the mechanical components easy to vibrate. As a reference for the setting, increase the value little by little by 20% from the initial setting.
For the velocity loop proportional gain parameter, the parameter number differs depending on the setting of enable/disable of Gain Scheduling and the high output setting.

Shown below is the table of velocity loop proportional gain parameter numbers that are enable.

<table>
<tr><td colspan="2"></td><td colspan="2">High Output Setting (Parameter No.152)</td></tr>
<tr><td colspan="2"></td><td>1 (Enable)</td><td>0 (Disable)</td></tr>
<tr><td rowspan="2">Gain Scheduling (Parameter No.144)</td><td>101 to (Enable)</td><td>Parameter No.145</td><td>Parameter No.145</td></tr>
<tr><td>to 101 (Disable)</td><td>Parameter No.153</td><td>Parameter No.31</td></tr>
</table>

</td></tr>
<tr><td>4</td><td>Abnormal noise is generated.
Especially, when stopped state and operation in low speed (less than 50mm/sec), comparatively high noise is generated.</td><td>

● Input the Parameter No.33 “Torque Filter Time Constant”. Try to increase by 50 as a reference for the setting. If the setting is too large, it may cause a loss of control system stability and lead the generation of vibration.

[Important] Prior to Adjustment:
This phenomenon is likely to occur when the stiffness of the mechanical components is not sufficient. The actuator itself may also resonate if its stroke is over 600mm or it is belt-driven type.
Before having an adjustment, check if:
1) Isn’t the setting in Parameter No.7 “Servo Gain Number”, “Velocity Loop Proportional Gain” or “Velocity Loop Integrated Gain” described below to extreme?
For the velocity loop proportional gain parameter and the velocity loop integrated gain parameter, the parameter number differs depending on the setting of enable/disable of Gain Scheduling and the high output setting.

Shown below is the table of velocity loop proportional gain parameter numbers that are enable.

<table>
<tr><td colspan="2"></td><td colspan="2">High Output Setting (Parameter No.152)</td></tr>
<tr><td colspan="2"></td><td>1 (Enable)</td><td>0 (Disable)</td></tr>
<tr><td rowspan="2">Gain Scheduling (Parameter No.144)</td><td>101 to (Enable)</td><td>Parameter No.145</td><td>Parameter No.145</td></tr>
<tr><td>to 101 (Disable)</td><td>Parameter No.153</td><td>Parameter No.31</td></tr>
</table>

Shown below is the table of velocity loop integrated gain parameter numbers that are enable.

<table>
<tr><td colspan="2"></td><td colspan="2">High Output Setting (Parameter No.152)</td></tr>
<tr><td colspan="2"></td><td>1 (Enable)</td><td>0 (Disable)</td></tr>
<tr><td rowspan="2">Gain Scheduling (Parameter No.144)</td><td>101 to (Enable)</td><td>Parameter No.146</td><td>Parameter No.146</td></tr>
<tr><td>to 101 (Disable)</td><td>Parameter No.154</td><td>Parameter No.32</td></tr>
</table>

2) The stiffness of the load is sufficient as much as possible, or the attachments are not loosened.
3) The actuator unit is mounted securely with a proper torque.
4) There is no waviness on the actuator mounting surface.

</td></tr>
</table>

No.	Situation that requires adjustment	How to Adjust
5	Large static friction of load makes actuator start slowly.	● Set Parameter No.71 “Feed forward gain”. Select a value in the range from 10 to 50 roughly. The larger the setting value is, the smaller the deviation is. Then the response is improved. Setting a large value may cause vibrations and/or noises to occur. Set the feed forward gain in order to improve the response of the actuator further after adjusting Parameter No.7 “Servo gain number” and Parameter No.31 “Velocity loop proportional gain”.
	Large load inertia makes response of actuator low at start and stop.	
	Takt time is desired to be shortened.	

6.3.2 MEC Mode 1, MEC Mode 2 and MEC Mode 3

[1] I/O Parameter List

The categories in the table below indicate whether parameters should be set or not. There are five categories as follows:

A : Check the settings before use.
B : Use parameters of this category depending on their uses.
C : Use parameters of this category with the settings at shipments leaving unchanged as a rule. Normally they may not be set.
D : Parameters of the category are set at shipment in accordance with the specification of the actuator. Normally they may not be set.
E : Parameters of the category are exclusively used by us for convenience of production. Changing their settings may not only cause the actuator to operate improperly but also to be damaged. So, never change the setting of the parameters.

Category do not appear on the teaching tool.
Also, the unused parameter numbers are not mentioned in the list.

[MEC Mode 1, MEC Mode 2 and MEC Mode 3]

No.	Category	Name	Symbol	Unit	Input Range	Default factory setting	For Mec Mode 1	For Mec Mode 2	For Mec Mode 2	Relevant sections This section
1	B	Positioning width	INP	mm	0.01 to Actuator eigenvalue	In accordance with actuator (Note1)	○			[2] (1)
3	C	Servo gain No.	PLG0	–	0 to 31	In accordance with actuator (Note1)	○	○	○	[2] (2) [3]
4	C	Torque filter time constant	TRQF	–	0 to 2500	In accordance with actuator (Note1)	○	○	○	[2] (3) [3]
5	C	Velocity loop proportional gain	VLPG	–	1 to 27661	In accordance with actuator (Note1)	○	○	○	[2] (4) [3]
6	C	Velocity loop integral gain	VLPT	–	1 to 217270	In accordance with actuator (Note1)	○	○	○	[2] (5) [3]
7	C	Press velocity	PSHV	mm/s	1 to actuator's max. pressing speed	In accordance with actuator (Note1)	○	○		[2] (6)
8	C	Press & hold stop judgment period	PSWT	msec	0 to 9999	255	○	○		[2] (7)
9	B	Current limitation in pressing and bridging	PSFC	–	0: Current limitation value while moving 1: Push-motion current-limiting value	0	○	○		[2] (8)
10	B	Auto servo motor OFF delay time	ASO1	sec	1 to 9999	1	○	○	○	[2] (9)
11	B	Stop mode selection	SMOD	–	0: Full stop 1: Servo-motor stop	0	○	○	○	[2] (10)
12	B	Current-limiting value at standstill during positioning	SPOW	%	1 to 70	35	○	○	○	[2] (11)
13	C	Current-limiting value during home return	ODPW	%	1 to 100	In accordance with actuator (Note1)	○	○	○	[2] (12)
15	C	Soft limit	LIMM	mm	0.01 to 9999.99	Actual stroke (Note1)	○	○	○	[2] (13)
16	C	Home return offset level	OFST	mm	0.00 to 9999.99	In accordance with actuator (Note1)	○	○	○	[2] (14)
17	D	Home return direction	ORG	–	0: Reverse 1: Forward	In accordance with actuator (Note1)	○	○	○	[2] (15)
18	B	Simple absolute unit	ETYP	–	0: Incremental 1: Simple absolute type 1	In accordance with specification at order accepted		○		[2] (16)
19	A	Absolute battery retention time [0:20 days/1:15 days /2:10 days/3:5 days]	AIP	days	0: 20 days 1: 5 days 2: 10 days 3: 5 days	2		○		[2] (17)
20	B	Position data change password	PASS	–	0000 to 9999	0000	○	○		[2] (18)
25	B	PIO inch distance	IOID	mm	0.01 to 1.00	0.1	○	○	○	[2] (19)

Note 1 The setting values vary in accordance with the specification of the actuator. At shipment, the parameters are set in accordance with the specification.
Note 2 This setting cannot be made for Quick Teach. This shows the effective parameters during an operation.

No.	Category	Name	Symbol	Unit	Input Range	Default factory setting	For Mec Mode 1	For Mec Mode 2	For Mec Mode 2	Relevant sections This section
26	B	Total movement count threshold	TMCT	time	0 to 99999999	0 (Disabled)	○	○		[2] (20)
27	B	Total operated distance threshold	ODOT	m	0 to 99999999	0 (Disabled)	○	○		[2] (21)
28	B	High output setting	BUEN	–	0: Disabled 1: Enabled	1	○	○		[2] (22)
29	B	BU velocity loop proportional gain	BUPC	–-	1 to 10000	200	○	○		[2] (23) [3]
30	B	BU velocity loop integral gain	BUIC	–	1 to 10000	4000	○	○		[2] (24) [3]

⚠ Caution :
- Parameter setting cannot be conducted in Quick Teach.
  Use either MEC PC Software or a teaching pendant.
- Please note that the high output setting automatically turns disable if Quick Teach equipped with a power supply unit (PCM-PST-1, PCM-PST-2 or PCM-PST-EU) is connected.

[2] Detail Explanation of Parameters

(1) Default positioning width (in-position) (Parameter No.1)

No.	Name	Symbol	Unit	Input Range	Default factory setting
1	Default positioning width	INP	mm	0.01(Note 1) to 999.99	0.10

The positioning complete signal PEND/INP is output once the remaining movement amount comes into this width.
Note 1 It is down to the minimum positioning width (L = Lead length/800).

(2) Servo gain number (Parameter No.3)

No.	Name	Symbol	Unit	Input Range	Default factory setting
3	Servo gain number	PLGO	–	0 to 31	In accordance with actuator

The servo gain is also called position loop gain or position control system proportion gain. The parameter defines the response when a position control loop is used. Increasing the set value improves the tracking performance with respect to the position command. However, increasing the parameter value excessively increases the chances of overshooting.
When the set value is too low, the follow-up ability to the position command is degraded and it takes longer time to complete the positioning.
For a system of low mechanical rigidity or low natural frequency (every object has its own natural frequency), setting a large servo gain number may generate mechanical resonance, which then cause not only vibrations and/or noises but also overload error to occur.

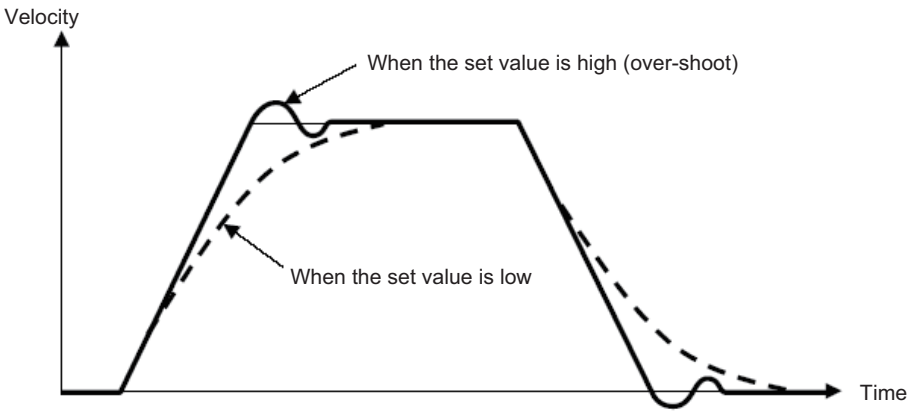

(3) Torque filter time constant (Parameter No.4)

No.	Name	Symbol	Unit	Input Range	Default factory setting
4	Torque filter time constant	TRQF	–	0 to 2500	In accordance with actuator

This parameter decides the filter time constant for the torque command. When vibrations and/or noises occur due to mechanical resonance during operation, this parameter may be able to suppress the mechanical resonance. This function is effective for torsion resonance of ball screws (several hundreds Hz).

(4) Velocity loop proportional gain (Parameter No.5)

No.	Name	Symbol	Unit	Input Range	Default factory setting
5	Velocity loop proportional gain	VLPG	–	1 to 27661	In accordance with actuator

It is enable when the high output setting (Parameter No.28) is set disable.

This parameter determines the response of the speed control loop. When the set value is increased, the follow-up ability to the velocity command becomes better (the servo-motor rigidity is enhanced). The higher the load inertia becomes, the larger the value should be set. However, excessively increasing the setting will cause overshooting or oscillation, which facilitates producing the vibrations of the mechanical system.
[Reference Item] Refer to 6.2 High Output Setting and Gain Scheduling Function

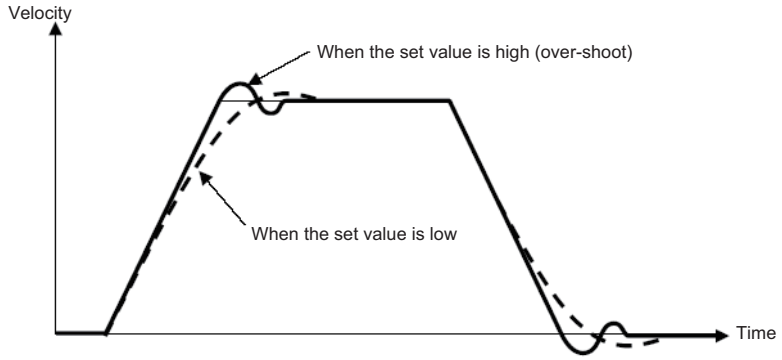

(5) Velocity loop integral gain (Parameter No.6)

No.	Name	Symbol	Unit	Input Range	Default factory setting
6	Velocity loop integral gain	VLPT	–	1 to 217270	In accordance with actuator

It is enable when the high output setting (Parameter No.28) is set disable.

Any machine produces friction. This parameter is intended to cope with deviation generated by external causes including friction. Increasing the setting value improves the reactive force against load change. That is, the servo rigidity increases. However, increasing the parameter value excessively may make the gain too high, which then cause the machine system to be vibrated due to over-shoot or shaking.
Tune it to obtain the optimum setting by watching the velocity response.
[Reference Item] Refer to 6.2 High Output Setting and Gain Scheduling Function

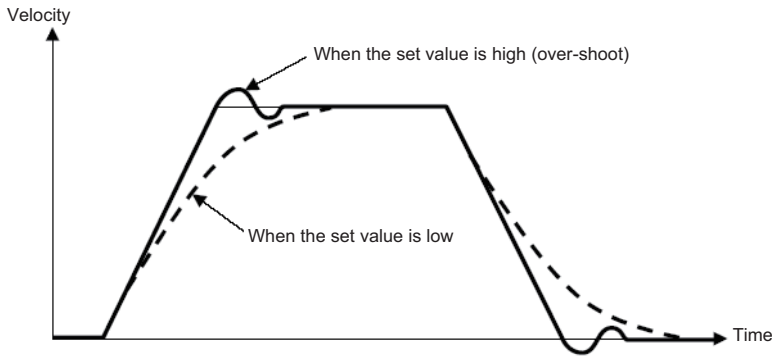

(6) Press velocity (Parameter No.7)

No.	Name	Symbol	Unit	Input Range	Default factory setting
7	Press velocity	PSHV	mm/s	0.01 to actuator's max. pressing speed	In accordance with actuator

This is the parameter to set the velocity in pressing operation.
If a change to the setting is required, make sure to have the setting below the maximum pressing velocity of the actuator. Setting it fast may disable to obtain the specified pressing force. Also when setting at a low velocity, take 5mm/s as the minimum.

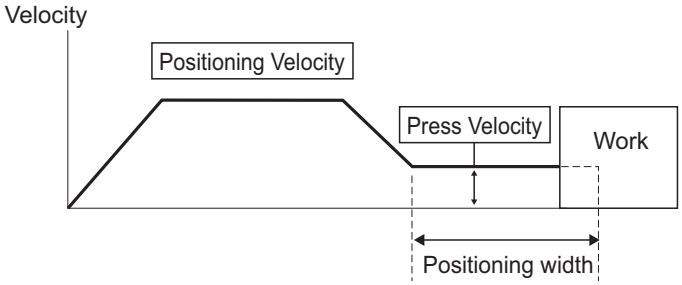

⚠ Caution: If the velocity of the positioning of the position table is set below this parameter, the pressing speed will become the same as the positioning speed.

(7) Press & hold stop judgment period (Parameter No.8)

No.	Name	Symbol	Unit	Input Range	Default factory setting
8	Press & hold stop judgment period	PSWT	msec	0 to 9999	255

Judging completion of pressing operation

Monitoring the torque (current limit) set in “Pressing Force” in the operation condition table in %, it turns ON the pressing complete signal PE* when the load current during pressing operation comes to the following condition. PE* turns ON once the condition is satisfied even if the work is not stopped.

(Accumulated time in which current reaches pressing value [%])
– (accumulated time in which current is less than pressing value [%])
≥ 255 ms (Parameter No.8)

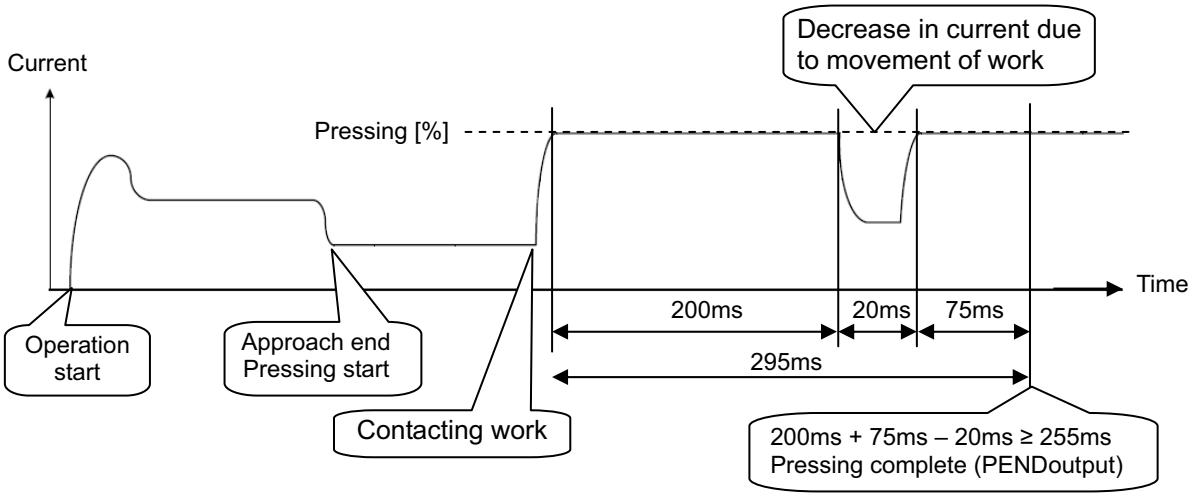

(8) Current limit value at stopping due to miss-pressing (Parameter No.9)

No.	Name	Symbol	Unit	Input Range	Default factory setting
9	Current limit value at stopping due to miss-pressing	PSFC	–	0: Current limiting value at stop 1: Current limit value during pressing	0

This parameter defines the restricted current value at stopping due to miss-pressing.
This restricted current value locks the servo till the next moving command.

(9) Auto servo motor OFF delay time (Parameter No.10)

No.	Name	Symbol	Unit	Input Range	Default factory setting
10	Auto servo motor OFF delay time	ASO1	sec	0 to 9999	1

Set the duration before the servo turns OFF after positioning process is complete when the power saving function is used.
[Refer to Chapter 5 Power-saving Function.]

(10) Stop mode selection (Parameter No.11)

No.	Name	Symbol	Unit	Input Range	Default factory setting
11	Stop mode selection	CTLF	–	0: Full stop 1: Servo-motor stop	0 (Does not use)

This parameter defines the power-saving function.
For complete stop, the actuator stops with the servo being on.
For servo stop, it stops with the full servo control.
[Refer to Chapter 5 Power-saving Function.]

(11) Current-limiting value at standstill during positioning (Parameter No.12)

No.	Name	Symbol	Unit	Input Range	Default factory setting
12	Current-limiting value at standstill during positioning	SPOW	%	1 to 70	35

When the value is increased, the stop holding torque is increased.
It is not necessary to change this setting in normal use. Movement due to external force can be prevented by setting the value bigger in case a large force is applied during a stop. However, there is a risk that motor or controller may burn if the setting is too high. Please contact IAI.

(12) Current-limiting value during home return (Parameter No.13)

No.	Name	Symbol	Unit	Input Range	Default factory setting
13	Current-limiting value during home return	ODPW	%	1 to 100	In accordance with actuator

The factory setting conforms to the standard specification of the actuator.
Increasing this setting will increase the home return torque.
It is not necessary to change this setting in normal use. Home-return operation may complete in front of the proper point in some cases depending on how it is installed or load is attached when the product is vertically mounted. It is necessary to increase the setting value in such cases.
Other causes can also be considered, so contact us in advance to making a change.

(13) Soft limit (Parameter No.15)

No.	Name	Symbol	Unit	Input Range	Default factory setting
15	Soft limit	LIMM	mm	0.01 to 9999.99	Actual stroke

Actuator enable stroke is set at the delivery.
Adjustment can be made freely within the movable range considering the suitability to the system for purposes of avoidance to interference, crash, etc.
The minimum setting unit is 0.01mm.
Example) Assuming the effective stroke length is set to 80mm;

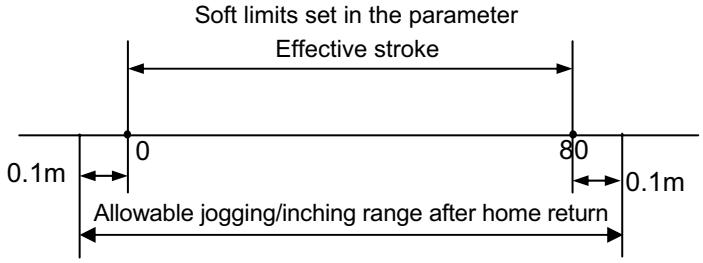

Note that the operational range with jog or inching after home-return complete should be 0.1mm outside the setting value. Also, Alarm Code 0D9 “Soft Limit Exceeding Error” is issued when exceeded the setting value by 0.3mm.

(14) Home return offset level (Parameter No.16)

No.	Name	Symbol	Unit	Input Range	Default factory setting
16	Home return offset level	OFST	mm	0.00 to 9999.99	In accordance with actuator

In this setting can set the distance from the mechanical end to the home position.
An adjustment is available for the following cases.
1) Want to match the actuator home position and the mechanical origin of the system.
2) Want to set a new home after reversing the factory-set home direction.
3) Want to eliminate a slight deviation from the previous home position generated after replacing the actuator.

[Adjustment Process]
1) Homing execution
2) Offset check
3) Parameter setting change
4) After the setting, repeat home return several times to confirm that the actuator always returns to the same home position.

⚠ Caution:
- Soft limit takes the home position as the datum. Therefore, when a change is made to the value of home-return offset level, also revise the value for soft limit.
- If the home return offset has been changed, the soft limit parameters must also be adjusted accordingly.
  Do not set a smaller value than the initial setting value for Home Return Offset. Normal excitation detection cannot be performed, and there may be a risk of generating the excitation detection error or causing abnormal noise.
  In case the there is a necessity of setting a value less than the initial setting, contact IAI.

(15) Home return direction (Parameter No.17)

No.	Name	Symbol	Unit	Input Range	Default factory setting
17	Home return direction	ORG	–	0: Reverse 1: Forward	In accordance with actuator

Unless there is an indication of home-reversed type (option), the direction of the home return for the straight axis is located on the motor side. [Refer to the coordinate system of the actuator.]
If it becomes necessary to reverse the home direction after the actuator is installed on the machine, change the setting.

⚠ Caution: The home direction cannot be changed for the rod type actuators.

(16) Simple absolute unit (Parameter No.18)

No.	Name	Symbol	Unit	Input Range	Default factory setting
18	Simple absolute unit	ETYP	–	0 : Enabled 1 : Disabled	0

Set to 1 for Simple Absolute Type of PIO Converter, and 0 for others.

(17) Absolute battery retention time (Parameter No.19)

No.	Name	Symbol	Unit	Input Range	Default factory setting
19	Absolute battery retention time	AIP	days	0: 20 days 1: 15 days 2: 10 days 3: 5 days	0

For Simple Absolute Type, establish the setting to define how long the position information of the encoder is to be remained for after the power to the controller is turned OFF. Setting can be done from four grades. Maximum number of the motor revolution due to external force during the power is OFF is controlled by the set days. Establish the setting assuming the speed when the work transporting parts, slider or rod, on the actuator is moved by external force during the power being OFF. The position information will lose if the number of motor revolution exceeds the set value. Consider safety margin when establishing the setting.

Motor rotation [rpm] = Moved speed [mm/s] / Lead length [mm] × 60

Setting	Position information retaining day (reference)	Motor max. rotation speed (rpm)
0 (Initial setting)	20 days	100
1	15 days	200
2	10 days	400
3	5 days	800

(18) Position Data Change Password (Parameter No.20)

No.	Name	Symbol	Unit	Input Range	Default factory setting
20	Position Data Change Password	PASS	–	0000 to 9999	0

Set the password for when making a change to the position data.
[Refer to MEC PC Software and teaching pendant instruction manuals provided separately for how to set up.]

(19) PIO inch distance (Parameter No.25)

No.	Name	Symbol	Unit	Input Range	Default factory setting
25	PIO inch distance	IOID	mm	0.01 to 1.00	0.1

Set the distance for inching operation (pitch feeding) of Quick Teach. Setting can be conducted in 0.01mm unit.

(20) Total movement count threshold (Parameter No.26)

No.	Name	Symbol	Unit	Input Range	Default factory setting
26	Total movement count threshold	TMCT	Times	0 to 99999999	0 (Disabled)

Notice will be made with Movement Counter Threshold Exceeding Alarm (04E) if the total number of movement exceeds the value set in this parameter.
The judgment would not be made if the value is set to 0.

(21) Total operated distance threshold (Parameter No.27)

No.	Name	Symbol	Unit	Input Range	Default factory setting
27	Total operated distance threshold	ODOT	m	0 to 99999999	0 (Disabled)

Notice will be made with Movement Distance Threshold Exceeding Alarm (04F) if the total distance of movement exceeds the value set in this parameter.
The judgment would not be made if the value is set to 0.

(22) High output setting (Parameter No.28)

No.	Name	Symbol	Unit	Input Range	Default factory setting
28	High output setting	BUEN	–	0: Disable 1: Enable	1 (Enabled)

Establish the setting of enable/disable for the high output function.

⚠ Caution : Please note that the high output setting automatically turns disable if Quick Teach equipped with a power supply unit (PCM-PST-1, PCM-PST-2 or PCM-PST-EU) is connected.

(23) BU velocity loop proportional gain (Parameter No.29)

No.	Name	Symbol	Unit	Input Range	Default factory setting
29	BU velocity loop proportional gain	BUPC	–	1 to 10000	200

If the high output setting is set enabled, this parameter setting becomes enable for the velocity loop proportional gain.

This is the parameter to determine the responsiveness of the velocity loop. Setting bigger values provides more capacity to track the speed command (it is described as the servo stiffness gets higher). The higher the load inertia becomes, the larger the value should be set. Setting the value too large causes such problems as overshooting and vibration, which would make the mechanical components vibrate.

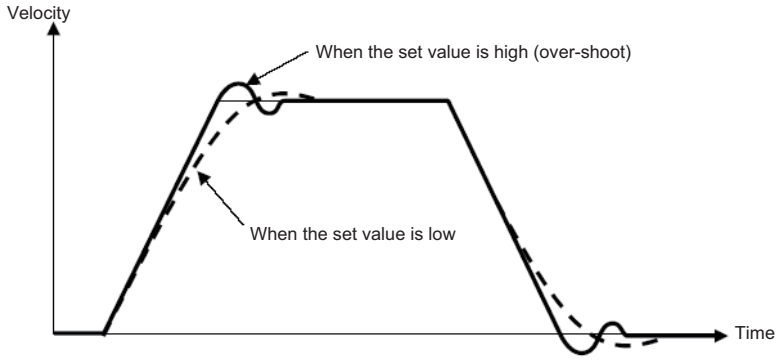

(24) BU velocity loop integral gain (Parameter No.30)

No.	Name	Symbol	Unit	Input Range	Default factory setting
30	BU velocity loop integral gain	BUIC	–	1 to 100000	4000

If the high output setting is set enabled, this parameter setting becomes enable for the velocity loop integrated gain.

Any machine produces friction. This parameter is intended to cope with deviation generated by external causes including friction. Setting bigger values provides more reinforced reaction force against the load fluctuation, thus higher servo stiffness. However, increasing the parameter value excessively may make the gain too high, which then causes the machine system to be vibrated due to overshoot or shaking.
Tune it to obtain the optimum setting by watching the velocity response.

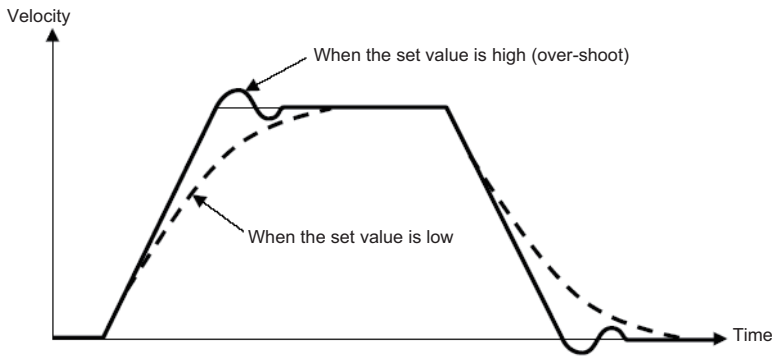

[3] Servo Adjustment

The parameters are preset at the factory before shipment so that the actuator operates stably within the rated (maximum) transportable weight.
However, the preset setting cannot always be the optimum load condition in the actual use. In such cases, servo adjustment may be required.
This section describes the basic servo adjustment method.

> ⚠ Caution: Rapid and excessive settings are dangerous. They may devices including the actuator to be damaged and/or people to be injured. Take sufficient note on the setting.
> Record settings during servo adjustment so that prior settings can always be recovered.
> When a problem arises and the solution cannot be found, please contact IAI.

<table>
<tr><th>No.</th><th>Situation that requires adjustment</th><th>How to Adjust</th></tr>
<tr><td rowspan="3">1</td><td>Takes time to finish positioning</td><td rowspan="3">● Increase the value of Parameter No.3 “Servo gain number”. By setting a larger value, the follow-up ability to the position command becomes better. Set the value to any of 3 to 10 roughly or up to 15 at the maximum. If the value is too large, an overshoot is caused easily and may cause noise or vibration.

For the velocity loop proportional gain parameter, the parameter number differs depending on the setting of enable/disable of Gain Scheduling and the high output setting.

Shown below is the table of velocity loop proportional gain parameter numbers that are enable.
<table>
<tr><th colspan="2">High Output Setting (Parameter No.28)</th></tr>
<tr><td>1 (Enable)</td><td>0 (Disable)</td></tr>
<tr><td>Parameter No.29</td><td>Parameter No.5</td></tr>
</table></td></tr>
<tr><td>Positioning accuracy is not appropriate</td></tr>
<tr><td>Shorter cycle time is desired</td></tr>
<tr><td>2</td><td>Vibration is generated at acceleration/deceleration</td><td>● The cause of the problem is excessive “acceleration/deceleration setting” or vulnerable structure of the unit on which the actuator is installed. If possible, reinforce the unit itself, first.
● Decrease the values of “acceleration/deceleration setting”.
● Decrease the number of Parameter No.3 “Servo gain number”. If the Parameter No.3 “Servo gain number” is too low, it takes long time to finish the positioning.</td></tr>
</table>

<table>
<tr><th>No.</th><th>Situation that requires adjustment</th><th>How to Adjust</th></tr>
<tr><td rowspan="2">3</td><td>Speed is uneven during the movement</td><td rowspan="2">● Increase the value of Parameter No.3 “Velocity loop proportional gain”. By setting a larger value, the follow-up ability to the speed command becomes better.
Setting too large value makes the mechanical components easy to vibrate. As a reference for the setting, increase the value little by little by 20% from the initial setting.
For the velocity loop proportional gain parameter, the parameter number differs depending on the setting of enable/disable of Gain Scheduling and the high output setting.

Shown below is the table of velocity loop proportional gain parameter numbers that are enable.
<table>
<tr><th colspan="2">High Output Setting (Parameter No.28)</th></tr>
<tr><td>1 (Enable)</td><td>0 (Disable)</td></tr>
<tr><td>Parameter No.29</td><td>Parameter No.5</td></tr>
</table></td></tr>
<tr><td>Speed accuracy is not appropriate</td></tr>
<tr><td>4</td><td>Abnormal noise is generated.
Especially, when stopped state and operation in low speed (less than 50mm/sec), comparatively high noise is generated.</td><td>● Input the Parameter No.4 “Torque Filter Time Constant”. Try to increase by 50 as a reference for the setting. If the setting is too large, it may cause a loss of control system stability and lead the generation of vibration.

[Important] Prior to Adjustment:
This phenomenon is likely to occur when the stiffness of the mechanical components is not sufficient. The actuator itself may also resonate if its stroke is over 600mm or it is belt-driven type.
Before having an adjustment, check if:
1) Isn’t the setting in Parameter No.3 “Servo Gain Number”, “Velocity Loop Proportional Gain” or “Velocity Loop Integrated Gain” described below to extreme?
For the velocity loop proportional gain parameter and the speed loop integrated gain parameter, the parameter number differs depending on the setting of enable/disable of Gain Scheduling and the high output setting.

Shown below is the table of velocity loop proportional gain parameter numbers and velocity loop integrated gain parameter numbers that are enable.
<table>
<tr><th></th><th colspan="2">High Output Setting (Parameter No.28)</th></tr>
<tr><th></th><th>1 (Enable)</th><th>0 (Disable)</th></tr>
<tr><td>Velocity Loop Proportional Gain</td><td>Parameter No.29</td><td>Parameter No.5</td></tr>
<tr><td>Velocity Loop Integral Gain</td><td>Parameter No.30</td><td>Parameter No.6</td></tr>
</table>
2) The stiffness of the load is sufficient as much as possible, or the attachments are not loosened.
3) The actuator unit is mounted securely with a proper torque.
4) There is no waviness on the actuator mounting surface.</td></tr>
</table>

Chapter 7 Troubleshooting

7.1 Action to Be Taken upon Occurrence of Problem

Upon occurrence of a problem, take an appropriate action according to the procedure below in order to ensure quick recovery and prevent recurrence of the problem.

1) Status LEDs and PIO Check on ERC3 and PIO Converter
[ERC3 main body]

○ : Illuminating × : OFF ☆ : Flashing

LED		Operation status	Status of PIO Output Signal	
(GN)	(RD)		CON Mode Type	MEC Mode Type
			*ALM Output (Note 1)	
×	×	Control Power Supply ON	ON	
		Control Power Supply OFF	OFF	
		Servo OFF	OFF	
×	○	Motor driving power supply OFF	OFF	
		Emergency Stop	OFF	
		Alarm (Operation cancellation level or more)	OFF	
○	×	Servo ON	ON	
☆	×	During automatic servo-off (Note 2)	ON	
○ (OR)		In initializing process at power being ON	OFF	

Note 1 The output signals with * mark are the active low signals that turn ON in normal condition and turn OFF while in abnormal condition.
Note 2 Servo-motor Auto OFF [Refer to Chapter 5 Power-saving Function]

[PIO converter]

○ : Illuminating × : OFF ☆ : Flashing

LED		Operation status	Status of PIO Output Signal			
			CON Mode Type			MEC Mode Type
SV (GN)	ALM (RD)		SV Output (Servo ON)	*ALM Output (Note 1) (Alarm)	*EMGS Output (Note 1)(Note 2) (Emergency Stop Status)	*ALM Output (Note 1)
×	×	Control Power Supply ON	OFF	ON	ON	ON
		Control Power Supply OFF	OFF	OFF	OFF	OFF
		Servo OFF	OFF	OFF	–	OFF
×	○	Motor driving power supply OFF	OFF	OFF	–	OFF
		Emergency Stop	OFF	OFF	OFF	OFF
		Alarm (Operation cancellation level or more)	OFF	OFF	–	OFF
○	×	Servo ON	ON	ON	ON	ON
☆	×	During automatic servo-off (Note 3)	OFF	ON	–	ON
○ (OR)		In initializing process at power being ON	OFF	OFF	–	OFF

Note 1 The output signals with * mark are the active low signals that turn ON in normal condition and turn OFF while in abnormal condition.
Note 2 *EMGS output is not prepared for Pulse Train Control Type.
Note 3 Servo-motor Auto OFF [Refer to Chapter 5 Power-saving Function]

2) Check whether an alarm occurs on the host controller (PLC, etc.).
3) Check the voltage of the main power supply (24V DC).
4) Check the voltage of power supply for the PIO (24V DC).
5) Alarm Check (Note1)
   Check the alarm code on the teaching tool such as PC software.
6) Check the connectors for disconnection or connection error.
7) Check the cables for connection error, disconnection or pinching.
   Cut off the main power of the system which ERC3 or PIO converter is installed in and remove the cables around the measurement point (to avoid conductivity through the surrounding circuit) before checking the conductivity.
8) Check the I/O signals.
   Using the host controller (PLC, etc.) or a teaching tool such as PC software, check the presence of inconsistency in I/O signal conditions.
9) Check the noise elimination measures (grounding, installation of surge killer, etc.).
10) Check the events leading to the occurrence of problem (Note 1), as well as the operating condition at the time of occurrence.
11) Analyze the cause.
12) Treatment

Note 1 If parameter No.111 (Selection of using calendar function) is set to “1” (use), it is possible to know the date and time at which the alarm occurred.
Set the date and time from the teaching tool such as PC software at the first power-on of the ERC3 and PIO converter.
The date and time data set once is retained for about 10 days if the power supply of the PIO converter is OFF. If the setting is not conducted or the time data is lost, it will be the time passed since 0sec when the power is turned ON. Even if the date and time data is lost, the generated error code is retained.
Alarms subject to this function only include those in 7.4 Alarm but do not include errors in the teaching tool such as PC software.

(!) Request:
In troubleshooting, exclude normal portions from suspicious targets to narrow down the causes. Check 1) to 10) described above before contacting us.

7.2 Fault Diagnosis

This section describes faults largely divided into three types as follows:

(1) Impossible operation of controller
(2) Positioning and speed of poor precision (incorrect operation)
(3) Generation of noise and/or vibration

7.2.1 Impossible operation of controller

Situation	Possible cause	Check/Treatment
1) Positioner Mode 1. Pulse Train Control Mode Status Display LED does not turn ON in green even though the power to ERC3 is supplied in MEC Mode 1 or MEC Mode 2. 2) Positioner Mode 2. SV in Status Display LEDs does not turn ON even though the power to PIO Converter is supplied in MEC Mode 2.	(1) Proper power is not supplied. (2) Servo-on command PIO is not input to ERC3 and PIO converter. 1) Poor contact of flat cable (3) Occurrence of alarm. (4) During emergency-stop. 1) Was the emergency-stop switch released? 2) Positioner Mode 1, MEC Mode 1, Pulse Train Control Mode EMG on the ERC3 is not connected. 3) Positioner Mode 2, MEC Mode 2 EMG- on the power supply connector of PIO Converter is disconnected. 4) MEC Mode 3 The wiring of the emergency stop connector on Quick Teach is disconnected.	(1) Ensure that appropriate voltage is supplied and the wiring is in the right condition. [Refer to Chapter 3, 3.1.3 [1], 3.2.3 [1], 3.3.3 [1], 3.4.3 [1] and 3.5.3 [1] wiring of Power Line and Emergency Stop Circuit.] (2) 1) Are the PIO cable connectors inserted to the mating connectors securely? Check the input signals on the I/O monitor of the teaching tool such as PC software. ⚠Caution In I/O cable conduction check, do not widen female pins of the connectors. Failure to follow this may cause poor contact. (3) Check the error code with the teaching tool being connected and remove the cause by referring the alarm list. [Refer to 7.4 Alarm List.] (4) 1) Release the emergency stop switch. 2) Positioner Mode 1, MEC Mode 1, Pulse Train Control Mode Check the connection of wires on EMG of ERC3. 3) Positioner Mode 2, MEC Mode 2 Check the connection of wires on PIO Converter power supply connector EMG-. [Refer to Chapter 3, 3.1.3 [1], 3.2.3 [1], 3.3.3 [1], 3.4.3 [1] and 3.5.3 [1] wiring of Power Line and Emergency Stop Circuit.] 4) Check the wiring of the emergency stop connector on Quick Teach. If it is not to be used, have the enclosed plug connector to make short-circuit.

Situation	Possible cause	Check/Treatment
1) Positioner Mode 1. Pulse Train Control Mode Status Display LED on ERC3 turns ON in red at the power boot in MEC Mode 1 or MEC Mode 3. 2) Positioner Mode 2. MEC Mode 2 ALM in Status LEDs on PIO Converter turns ON at the power boot.	(1) Occurrence of alarm. (2) During emergency-stop. 1) Was the emergency-stop switch released? 2) Positioner Mode 1, MEC Mode 1, Pulse Train Control Mode EMG on the ERC3 is not connected. 3) Positioner Mode 2, MEC Mode 2 EMG- on the power supply connector of PIO Converter is disconnected. 4) MEC Mode 3 The wiring of the emergency stop connector on Quick Teach is disconnected.	(1) Check the error code with the teaching tool being connected and remove the cause by referring the alarm list. [Refer to 7.4 Alarm List.] (2) 1) Release the emergency stop switch. 2) Positioner Mode 1, MEC Mode 1, Pulse Train Control Mode Check the connection of wires on EMG of ERC3. 3) Positioner Mode 2, MEC Mode 2 Check the connection of wires on PIO Converter power supply connector EMG-. [Refer to Chapter 3, 3.1.3 [1], 3.2.3 [1], 3.3.3 [1], 3.4.3 [1] and 3.5.3 [1] wiring of Power Line and Emergency Stop Circuit.] 4) Check the wiring of the emergency stop connector on Quick Teach. If it is not to be used, have the enclosed plug connector to make short-circuit.
The host controller (PLC) cannot control PIO (24V DC I/O).	PIO signal communication is disabled. 1) Positioner Mode 1, MEC Mode 1 Connection failure of PIO Type I/O cable to be connected to ERC3 2) Positioner Mode 1, MEC Mode 1 Connection failure of the ribbon cable to be connected to PIO Converter	1) Are the PIO cable connectors inserted to the mating connectors securely? Check the input signals on the I/O monitor of the teaching tool such as PC software. ⚠Caution In I/O cable conduction check, do not widen female pins of the connectors. Failure to follow this may cause poor contact.

[In the case of Positioner Mode]

Situation	Possible cause	Check/Treatment
Both position No. and start signal are input to the controller, but the actuator does not move.	There is a problem either in PIO signal treatment, position table setting or operation mode selection. 1) Servo OFF condition 2) The pause signal is OFF. 3) Positioning command is issued to a stop position. 4) There is no positioning data set to the commanded position number.	1) Is Status LED on ERC3 turned ON in green? If PIO Converter is used, is Status LED turned ON in green? [Refer to Name for Each Parts and Their Functions] Turn ON the servo-on signal SON of PIO. 2) Operation is available when PIO pause signal *STP is ON and pause when it is OFF. Turn it ON. [Refer to Chapter 3, 3.1.2 and 3.3.2] 3) Check the sequence or the settings of the position table. 4) It will generate Alarm Code 0A2 “Position Data Error”. Conduct the position table setting.

(Note) Refer to Chapter 3 Wiring for PIO signal.

[In the case of Pulse Train Control Mode]

Situation	Possible cause	Check/Treatment
In spite of inputting pulse-train to the controller, the actuator does not move.	PIO signal processing or parameter setting is incorrect. 1) Servo OFF state 2) The pause signal is OFF. 3) The pulse-train type, a parameter, is selected incorrectly. 4) The positive/negative logic of pulse-train, a parameter, is selected inversely. 5) The unit moving distance per pulse, which is a setting condition of electronic gear ratio, a parameter, is too small.	1) Is Status LED on ERC3 turned ON in green? If PIO Converter is used, is Status LED turned ON in green? [Refer to Name for Each Parts and Their Functions] Turn ON the servo-on signal SON of PIO. 2) Operation is available when PIO pause signal *STP is ON and pause when it is OFF. Turn it ON. [Refer to Chapter 3, 3.2.2.] 3) Check the pulse train type. [Refer to Chapter 4, 4.3 [8] (2) Format Settings of Command Pulse Train.] 4) Check the positive/negative logic of pulse-train. (Host units supplied by some manufacturers have positive/negative logic opposite to our logic. Reverse the logic setting and try the operation.) [Refer to Chapter 4, 4.3 [8] (2) Format Settings of Command Pulse Train.] 5) Do not make the unit moving distance less than the resolution of the encoder. The actuator does not move unless pulses by the resolution of the encoder are input. [Refer to Caution in Chapter 4, 4.3 [8] (1) Electrical Gear Setting] (Note) In case of 3) or 4), the actuator may not sometimes operate smoothly. You may not find case 5) when the actuator is moved for a long distance at a high frequency.

(Note) Refer to Chapter 3 Wiring for PIO signal.

[Startup Adjustment with Teaching Tool when Control Circuit Incomplete]

Situation	Possible cause	Check/Treatment
1) Positioner Mode 1. Pulse Train Control Mode An operation cannot be performed even though a teaching tool is connected and the motor and control power are supplied to ERC3 in MEC Mode1 or MEC Mode3. 2) Positioner Mode 2. An operation cannot be performed even though a teaching tool is connected and the motor and control power are supplied to PIO Converter in MEC Mode2. (The emergency stop switch is released on the teaching tool)	Cable treatment or mode selection. 1) Emergency stop condition 2) Servo OFF condition 3) In pause	1) Positioner Mode 1, MEC Mode 1, Pulse Train Control Mode Check the connection of wires on EMG of ERC3. [Refer to Chapter 3, 3.1.3 [1], 3.2.3 [1] and 3.4.3 [1] wiring of Power Line and Emergency Stop Circuit.] 2) Positioner Mode 2, MEC Mode 2 Check the connection of wires on PIO Converter power supply connector EMG-. [Refer to Chapter 3, 3.3.3 [1] and 3.5.3 [1] wiring of Power Line and Emergency Stop Circuit.] 1) Supply 24V DC to EMG- terminal of the power connector. ⚠ Warning If the process of 1) is conducted, put back the setting as soon as the adjustment work is finished. Starting the operation without putting it back may cause a serious accident since the emergency stop is set invalid. 2) 3) Select the teach mode on the teaching tool.

7.2.2 Positioning and speed of poor precision (incorrect operation)

Situation	Possible cause	Check/Treatment
Completion of operation on the way to home return	In the home return of our standard specification, the actuator is first pressed to the mechanical end, moved oppositely, and subject to positioning stop at the home position. Therefore, the product may judge as the mechanical end even though it is still on the way when the load is large and interfere with surrounding object. 1) A load exceeding its rating weight is installed on the actuator. 2) It is touched to interference in the way of the run. 3) Torsion stress is applied to guide due to improper fixing method of the actuator or uneven fastening of bolts. 4) The sliding resistance of the actuator itself is large.	1) Reduce the load. 2) Remove the interference. 3) Loosen the fixing bolts once and check whether the slider can move smoothly. If the slider can move smoothly, check if there is a deformation on the attached surface, and install the actuator again following the instructions stated in Instruction Manual. 4) Please contact IAI.
Shocks at start and/or stop.	Acceleration/deceleration is set too high.	Decrease the settings of acceleration/deceleration.
Overshoot during deceleration to stop.	The load inertia is large.	Decrease the setting of deceleration.
Positioning of poor precision Uneven speed during movement Acceleration/deceleration not smooth (bad speed response) Trace of poor precision	[Refer to 6.3.1 [3] and 6.3.2 [3] Servo Adjustment.] (Note) When the pulse-train operation mode is selected, first adjust pulse-train commands.	

[In the case of Positioner Mode]

Situation	Possible cause	Check/Treatment
Positioning at a position different from that of commanded position No.	PIO signal processing is incorrect. 1) Start signal CSTR is input too early after position No. command. Or position No. command and start signal are input concurrently. 2) The correct position No. is not specified due to PIO signal disconnection or poor connector contact.	1) The stop position may be set for another purpose. Make sure to complete the reading of the position numbers to ERC3 before inputting the start signal. [Refer to Chapter 4, 4.2 Operation in Positioner Mode and 10.6 Example of Basic Positioning Sequence.] 2) Check the input signal on I/O monitor on the teaching tool.
Complete signal PEND is not output even though positioning process is completed.	PIO signal processing is incorrect. 1) Start signal CSTR is not turned OFF.	1) Make the start signal CSTR turned OFF before completing the positioning process by the turn-off of positioning complete signal PEND after starting operation, and so on.

[In the case of Pulse Train Control Mode]

Situation	Possible cause	Check/Treatment
The actuator does not stop at the command position.	PIO signal processing or parameter setting is incorrect. 1) Incorrect electronic gear ratio 2) Acceleration/deceleration is set incorrectly in the host controller. 3) Noise 4) The pulse-train type, a parameter, is selected incorrectly. 5) The unit moving distance per pulse, which is a setting condition of electronic gear ratio, a parameter, is too small.	1) Check the setting of electronic gear ratio. The host controller also has the electronic gear ratio parameter. Set the electronic gear ratio not to be inconsistent with that of the host controller. In addition, reduce the electronic gear ratio as much as possible. If not, data overflow may occur in arithmetic processing to disable correct positioning. [Refer to Chapter 4, 4.3 [3] (1) Electrical Gear Setting.] 2) The actuator operates at the speed and acceleration/deceleration based on the frequency of input pulses. Check if the acceleration/deceleration set in the host controller exceed the rating acceleration/deceleration of the actuator. 3) Noise can be misread as the pulse if it jumps into the pulse train. Take proper measures against noise. [Refer to Chapter 2, 2.3.4 Noise Prevention and How to Attach Electrical Devices.] Check the cable connection between the controller and AK-04 if AK-04 is used. • Cable length : 50mm or shorter recommended (as short as possible) • Shield treatment : Use the shield treatment wire. 4) Check the pulse-train type. [Refer to Chapter 4, 4.3 [3] (2) Format Settings of Command Pulse Train.] 5) Do not make the unit moving distance less than the resolution of the encoder. The actuator does not move unless pulses by the resolution of the encoder are input. [Refer to Caution in Chapter 4, 4.3 [3] (1) Electronic Gear Setting] (Note) In case of 2) or 3), the actuator may not sometimes operate. You may not find case 4) when the actuator is moved for a long distance at a high frequency.
The actuator does not reach the command position when operated with extremely low speed.	To avoid unnatural move, the actuator would not move unless the differential pulse becomes 3 pulses or more.	Set to the full-servo mode. (Set Parameter No.53 Stop Mode initial setting to 4.)

7.2.3 Generation of noise and/or vibration

Situation	Possible cause	Check/Treatment
Generation of noise and/or vibration from actuator itself	Noise and vibration are generated by many causes including the status of load, the installation of the actuator, and the rigidity of the unit on which the actuator is installed.	Servo adjustment may improve the situation. [Refer to 6.3.1 [3], 6.3.2 [3] Servo Adjustment.] It may be improved with setting to Full Servo Mode if the case occurs during deceleration and stop. [Refer to Chapter 5 Power-saving Function]

[In the case of Positioner Mode]

Situation	Possible cause	Check/Treatment
Vibrations of load	1) Acceleration/deceleration is set too high. 2) The installation structure and/or the installed load are easily affected by acceleration/deceleration.	1) Decrease the settings of acceleration/deceleration.

[In the case of Pulse Train Control Mode]

Situation	Possible cause	Check/Treatment
Vibrations of actuator or load	Acceleration/deceleration is set too high.	Decrease the setting of acceleration/deceleration in the host controller.
Generation of noise during acceleration	The host controller has no acceleration/deceleration function or does not have acceleration/deceleration function from speed 0. (Some positioning units have acceleration/deceleration function but cannot use the function from speed 0. Note this when you select a positioning unit.)	[Refer to 6.3.1 [3], 6.3.2 [3] Servo Adjustment]

7.3 Alarm Level

The alarms are classified to 3 types of levels by the content of the error.

Alarm level	ALM lamp	*ALM signal	Status when an error occurred	Cancellation method
Message(Note 1)	OFF	No output	No stop	Alarm of maintenance output such as battery voltage drop or the teaching tool such as PC software [Refer to Instruction Manual of each tool for details.]
Operation release	ON	Output	Servo OFF after deceleration to stop	Reset the alarm by the PIO or teaching tool.
Cold start	ON	Output	Servo OFF after deceleration to stop	Software reset or power reconnection by teaching tool. Home return is required for any actuators of other than simple absolute specification.

⚠ Caution: Reset each alarm after identifying and removing the cause.
If the cause of the alarm cannot be removed or when the alarm cannot be reset after removing the cause, please contact IAI.
If the same error occurs again after resetting the alarm, it means that the cause of the alarm has not been removed.

(Note 1) Set Parameter No.156 Torque Check/Light Malfunction Output, and the output is made to PIO (OUT 15) when ERC3 or PIO converter gets to either of the following conditions;

1) Warning for Absolute Battery Voltage Drop ····
Supply the power for 72 hours or more to charge the battery sufficiently and then perform the Absolute Reset operation. If the same failure occurs often even with enough battery charge, it is considered the end of the battery life.
Replace the battery.

2) When satisfying the conditions to generate the message level alarm described in (7.4) in the next page

7.4 Alarm List

Alarm Code	Alarm Level	Alarm Name	Cause/Treatment	Positioner Mode 1 Pulse Train Control Mode	Positioner Mode 2	MEC Mode 1	MEC Mode 2
02C	Message	Monitoring data type change command during monitoring	Cause : Changing data type was directed during monitoring by the monitoring function of PC software. Treatment : Stop the monitoring before changing data type.	○	○	×	×
02D		Monitoring related command in monitoring function invalid status	Cause : An attempt was made to perform monitoring in the state where the monitoring function is set to be ineffective. Treatment : Set parameter No.112 (Selection of monitoring mode) to “1” or “2” (“0”: no use).	○	○	×	×
02E		RTC related command in RTC invalid status	Cause : An attempt was made to use the calendar in the state where the RTC (calendar) function was made ineffective. Treatment : Set parameter No.111 (Selection of use of calendar function) to “1” (“0”: no use).	×	○	×	×
048		Driver overload alarm	Cause : There is a risk of overload with the current operation condition. Treatment : Lower the setting of acceleration/deceleration. Also, increase the frequency of pause.	○	○	○	○
04E		Exceeded movement count threshold	Cause : In the case of Positioner Mode 2, the total number of movement exceeded the number set in Parameter No.147 “Threshold for Total Number of Movement”. In the case of MEC Mode 2, the total number of movement exceeded the number set in Parameter No.26 “Threshold for Total Number of Movement”.	×	○	×	○
04F		Exceeded operated distance threshold	Cause : In the case of Positioner Mode 2, the total distance of actuator drive exceeded the number set in Parameter No.148 “Threshold for Total Distance of Drive”. In the case of MEC Mode 2, the total distance of actuator drive exceeded the number set in Parameter No.27 “Threshold for Total Number of Drive”.	×	○	×	○
080	Operation release	Move command in servo OFF	Cause : A move command was issued when the servo is OFF. Treatment : 1) Positioner Mode 1, Positioner Mode 2, Pulse Train Control Mode Issue a movement command after confirming the servo is ON (servo ON signal SV or position complete signal PEND is ON). 2) MEC Mode 1, MEC Mode 2 Cancel the emergency stop if it is not yet cancelled, and turn the servo ON to make a movement command.	○	○	○	○

Alarm Code	Alarm Level	Alarm Name	Cause/Treatment	Positioner Mode 1 Pulse Train Control Mode	Positioner Mode 2	MEC Mode 1	MEC Mode 2
082	Operation release	Position command in incomplete home return	Cause : A position move command was issued before home return was completed. Treatment : 1) Positioner Mode 1, Positioner Mode 2, Pulse Train Control Mode Issue a command after confirming that home return has been completed HEND is ON. 2) MEC Mode 1, MEC Mode 2 In the case of 2-point stop, make sure the home-return complete HEND signal is ON before making a movement command. In the case of 3-point stop, input ST0 Signal to perform a home-return operation before making a movement command.	○	○	○	○
084		Absolute position move command when home return is not yet completed	Cause : A move command was issued when home return was still in progress. Treatment : 1) Positioner Mode 1, Positioner Mode 2, Pulse Train Control Mode Issue a movement command after performing home return operation and confirming the complete signal HEND. 2) MEC Mode 1, MEC Mode 2 In the case of 2-point stop, perform a home-return operation and confirm the home-return complete HEND signal before making a movement command. In the case of 3-point stop, turn OFF the movement command, reset the alarm and redo the home-return operation.	○	○	○	○
085		Position No. error during movement	Cause : A non-existing (invalid) position number was specified in the positioner mode. Treatment : Check the position table again and indicate an effective position number.	○	○	×	×
090		Software reset during servo ON	Cause : A software reset command was issued when the servo was ON. Treatment : Issue a software reset command after confirming that the servo is OFF (SV signal is 0).	○	○	○	○
091		Position No. error in teaching	Cause : The position number out of the available range was selected in the teaching. Treatment : Select the position number from 63 or smaller.	○	○	×	×
092		PWRT signal detection during movement	Cause : Input was made while the current position writing signal PWRT is in the JOG operation in Teaching Mode of PIO Pattern 1. Treatment : Input the PWRT signal after confirming that the job button is not pressed and the actuator is stopped (MOVE output signal is OFF).	×	○	×	×
093		PWRT signal detection in incomplete home return	Cause : Input was made while the current position writing signal PWRT is in home-return incomplete in Teaching Mode of PIO Pattern 1. Treatment : Input the HOME signal first to perform home return, and then input the PWRT signal after confirming that the home return has completed (HEND output signal is ON).	×	○	×	×

Alarm Code	Alarm Level	Alarm Name	Cause/Treatment	Positioner Mode 1 Pulse Train Control Mode	Positioner Mode 2	MEC Mode 1	MEC Mode 2
0A1	Cold start	Parameter data error	Cause : The data input range in the parameter area is not appropriate. Example 1) This occurs when the relation of the positive and negative sides of the soft limit is clearly inappropriate, for example, when the value for the soft limit positive side is set to 200.3mm while the soft limit negative side is 300mm, in Positioner Mode 1 or Positioner Mode 2. [Refer to 3.2 [2] Soft limit +, Soft limit -] Treatment : Change the value to the appropriate one.	○	○	○	○
0A2	Operation release	Position data error	Cause : 1) A move command was input when no target position was set in the “Position” field of a position No. in the position table. 2) The value of the target value in the “Position” field exceeded the Parameter No.3 and 4 “Soft limit set value”. 3) The target position in “Position” box is indicated in a number for relative coordinates in Electromagnetic Valve Type in PIO Pattern 1 of Positioner Mode 1 or Electromagnetic Valve Mode 2 in PIO Pattern 5 of Positioner Mode 2. Treatment : 1) Set the target position. 2) Change the target position value to the one within the soft limit set value. 3) The target position cannot be set by relative coordinate (incremental feed).	○	○	○	○
0A3		Position command data error	Cause : 1) The value for the velocity or acceleration/deceleration exceeds the maximum setting. Treatment : 1) Table to input a proper value.	○	○	○	○
0A4		Command counter overflow	Cause : The number of input command pulses exceeded the range of -134217728 to +134217728 (H'F8000000 to '07FFFFFF). Treatment : Attempt to make the value of the electrical gear ratio smaller (make the movement against the unit bigger).	○	×	×	×

Alarm Code	Alarm Level	Alarm Name	Cause/Treatment	Positioner Mode 1 Pulse Train Control Mode	Positioner Mode 2	MEC Mode 1	MEC Mode 2
0A7	Operation release	Command deceleration error	Cause : Because there is not enough deceleration distance when the deceleration is changed to a lower setting during the operation, the actuator exceeded the soft limit when deceleration was made from the current position with the deceleration after the change. 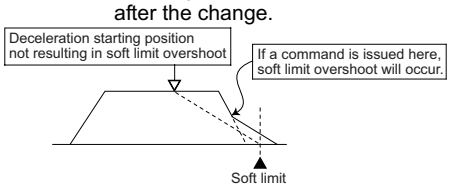 The cause is that the timing to make the next movement command when the speed was changed during the operation was late. Treatment : Make the timing earlier for the movement command for the deceleration speed change.	○	○	○	○
0A8	Cold start	Unsupported motor/encoder types	Cause : Motor or encoder cannot be identified. Treatment : Please contact us if the alarm is issued even with the applicable actuator and the same problem happens again even after rebooting the power.	○	○	○	○

Alarm Code	Alarm Level	Alarm Name	Cause/Treatment	Positioner Mode 1 Pulse Train Control Mode	Positioner Mode 2	MEC Mode 1	MEC Mode 2
0B8	Cold start	Excitement detection error	Cause : The excitation detection starts when the servo is turned on for the first time after the power is supplied. Detection process does not complete in the specific time (set in Parameter No.29 if Positioner Mode 1, Positioner Mode 2 or Pulse Train Control Mode). 1) Connection error or wire breakage of motor/encoder cables. 2) Brake is not released (when equipped with a brake). 3) Load to the motor is high due to external force. 4) Power was turned on while touching to the mechanical end. 5) The resistance in the actuator sliding operation is large. 6) In the case of Positioner Mode 1, Positioner Mode 2 or Pulse Train Control Mode, a smaller number than the initial value was set in Parameter No.22 Home-Return Offset. In the case of MEC Mode 1 or MEC Mode 2, a smaller number than the initial value was set in Parameter No.16 Home-Return Offset. Treatment : 1) Check for the motor/encoder cable wiring condition. 2) For Positioner Mode 1 and MEC Mode 1, if the problem is solved with 24V DC 150mA being supplied to BK, it may be concerned a malfunction of the controller inside the ERC3 motor unit. 3) Confirm that there is no error in the mechanical part assembly condition. 4) Move the slider or the rod to a point where it would not hit the mechanical end and reboot the system. 5) If the loaded weight is within the allowable range, turn the power OFF and check the resistance in sliding operation by moving the slider with hand. 6) In the case of Simple Absolute Type, the excitation detection is executed again at the home-return complete. If the Parameter No.22 Home Return Offset is set smaller than the initial setting, the actuator interferes with the mechanical end and excitation detection cannot be performed properly.	○	○	○	○

Alarm Code	Alarm Level	Alarm Name	Cause/Treatment	Positioner Mode 1 Pulse Train Control Mode	Positioner Mode 2	MEC Mode 1	MEC Mode 2
0BE	Operation release	Home return timeout	Cause : Home return does not complete after elapse of a certain period after the start of home return. Treatment : This error does not occur in normal operation. Please contact IAI.	○	○	○	○
0C0	Operation release	Actual speed excessive	Cause : This indicates the number of motor rotation exceeded the number of allowable rotation. 1) The slide resistance of the actuator is locally high. 2) The load is increased too much due to a external force. With the reasons above, it can be considered a sudden speed increase has occurred before detecting the servo error. Treatment : Even though this would not occur in normal operation, check if there is any abnormality in the parts assembly condition. Also check if there is a possibility that an external force may be applied in the direction of the actuator movement.	○	○	○	○
0C1	Operation release	Servo error	Cause : It indicates 2 seconds has passed without making a move since a move command was received. 1) Connection error or wire breakage of motor/encoder cables. 2) Brake is not released (when equipped with a brake). 3) Load to the motor is high due to external force. 4) The resistance in the actuator sliding operation is large. Treatment : 1) Check for the motor/encoder cable wiring condition. 2) For Positioner Mode 1 and MEC Mode 1, if the problem is solved with 24V DC 150mA being supplied to BK, it may be concerned a malfunction of the controller inside the ERC3 motor unit. 3) Confirm that there is no error in the mechanical part assembly condition. 4) If the loaded weight is within the allowable range, turn the power off and check the resistance in sliding operation by moving the slider with hand.	○	○	○	○
0C8	Cold start	Overcurrent	Cause : The output current in the power circuit section is increased abnormally. Treatment : This alarm will not be generated in normal operation. There may be concerned a degradation of motor winding insulation, malfunction of the controller inside the ERC3 motor unit, etc. Please contact IAI.	○	○	○	○
0C9	Cold start	Overvoltage	Cause : The power voltage reached the overvoltage. Treatment : There may be concerned a malfunction of a component of the controller inside the ERC3 motor unit. Please contact IAI.	○	○	○	○

Alarm Code	Alarm Level	Alarm Name	Cause/Treatment	Positioner Mode 1 Pulse Train Control Mode	Positioner Mode 2	MEC Mode 1	MEC Mode 2
0CA	Cold start	Overheat	Cause : This shows the heat on the components inside the controller inside the ERC3 motor unit is too high. 1) Operation is performed with the load condition exceeding the specified range. 2) High temperature around the controller. 3) Load to the motor is high due to external force. 4) Components' failure of the controller inside the ERC3 motor unit. Treatment : 1) Revise the operation condition such as decreasing the acceleration/deceleration speed. 2) Lower the surrounding temperature of the controller. 3) Confirm that there is no error in the mechanical part assembly condition. (Note) This error would not normally occur. If it occurs, confirm there is not (1) to (3) above. If the same problem occurs again even after taking these actions, it may be concerned the malfunction of the controller inside the ERC3 motor unit. Please contact IAI.	○	○	○	○
0CC		Control power source voltage error	Cause : The control power voltage dropped less than the voltage drop threshold (120% of 24V DC = 28.8V). 1) The voltage of 24V DC power supply is high. 2) Components' malfunction of the controller inside the ERC3 motor unit 3) During acceleration/deceleration and servo-on that use the remote sensing function of 24V DC power supply, the current consumption rises transiently. Using the remote sensing function with a power supply with no enough current capacity may cause overvoltage responding to the current change. Treatment : 1) 2) Check the voltage of the power supply. 3) Think to use a power supply with enough current capacity or not to use the remote sensing function. In the case that the voltage is normal, please contact IAI.	○	○	○	○

Alarm Code	Alarm Level	Alarm Name	Cause/Treatment	Positioner Mode 1 Pulse Train Control Mode	Positioner Mode 2	MEC Mode 1	MEC Mode 2
0CE	Operation release	Drop in control supply voltage	Cause : The control power voltage dropped less than the voltage drop threshold (80% of 24V DC = 19.2V). 1) The voltage of 24V DC power supply is low. 2) Components' malfunction of the controller inside the ERC3 motor unit Treatment : Check the voltage of the power supply. In the case that the voltage is normal, please contact IAI.	○	○	○	○
0D4	Cold start	Drive Source Error	Cause : 1) Motor power input voltage (input to MP+ of ERC3) is too high for Position Mode 1, MEC Mode 1 and Pulse Train Control Mode Motor power input voltage (input to MPI of PIO Converter) is too high for Positioner Mode 2 and MEC Mode 2 During acceleration/deceleration and servo-on, the current consumption rises transiently. Using the remote sensing function with a power supply with no enough current capacity may cause overvoltage responding to the current change. 2) Overcurrent is generated on the motor power supply line Treatment : 1) Check the power supply voltage input to MP+ of ERC3 for Position Mode 1, MEC Mode 1 and Pulse Train Control Mode. Check the power supply voltage input to MPI of PIO Converter for Position Mode 2 and MEC Mode 2. Think to use a power supply with enough current capacity or not to use the remote sensing function.	○	○	○	○
0D5		Differential Counter Overflow with Home Return Incomplete	Cause : This alarm indicates that the position deviation counter has overflowed. 1) The speed dropped or stopped during JOG move due to an impact of external force, hit to the mechanical end or overload. 2) The excited-phase detection operation following the power-on is unstable. Treatment : 1) This error occurs when the actuator cannot be operated as it is commanded. Check the load conditions such as if the work is touching to the surrounding object, or brake is properly released, and remove the cause. 2) Overload is concerned. Revise the transportable weight.	○	○	○	○

Alarm Code	Alarm Level	Alarm Name	Cause/Treatment	Positioner Mode 1 Pulse Train Control Mode	Positioner Mode 2	MEC Mode 1	MEC Mode 2
0D8	Operation release	Deviation overflow	Cause : This alarm indicates that the position deviation counter has overflowed. 1) The speed dropped or the actuator stopped due to the effect of external force or overload. 2) The excited-phase detection operation following the power-on is unstable. Treatment : 1) This error occurs when the actuator cannot be operated as it is commanded. Check the load conditions such as if the work is touching to the surrounding object, or brake is properly released, and remove the cause. 2) Overload can be concerned. Revise the transportable weight and redo the home-return operation.	○	○	○	○
0D9		Software stroke limit exceeded	Cause : The current position of the actuator exceeds the software stroke limit. Treatment : Return the actuator to be within the range of the software stroke limit.	○	○	○	○
0DC		Pressing motion range over error	Cause : 1) After the pressing operation has complete, the force to push back is too large and the pushed back to the pressing start position (“Position” in the position table). 2) The actuator touched the work during the approach movement before the pressing movement. Treatment : 1) Revise the setting and adjust it so the force to push back gets smaller. 2) Set the “Position” setting in front in the position table to shorten the approach distance.	○	○	○	○

Alarm Code	Alarm Level	Alarm Name	Cause/Treatment	Positioner Mode 1 Pulse Train Control Mode	Positioner Mode 2	MEC Mode 1	MEC Mode 2
0E0	Cold start	Overload	Cause : 1) The work weight exceeds the rated weight, or an external force is applied and the load increased. 2) If the actuator is equipped with a brake, the brake is not released. 3) The slide resistance of the actuator is locally high. Treatment : 1) Check the work and its surrounding area to remove the cause. 2) For Positioner Mode 1 and MEC Mode 1, if the problem is solved with 24V DC 150mA being supplied to BK, it may be concerned a malfunction of the controller inside the ERC3 motor unit. Please contact IAI. If the problem cannot be solved, it may be concerned a malfunction of the brake, breakage of a cable or malfunction of the controller inside the ERC3 motor unit. Please contact IAI. 3) In the case that the work can be moved by hand, move it. Then, check that there is no location where a sliding resistant is too large. Check if the installation face is distorted. When the error occurs in operation of the actuator only, Please contact IAI. ⚠ Caution Restart the operation after making sure to remove the cause. If you cannot determine that the cause is removed completely, wait for at least 30 minutes before turning on the power to prevent the motor coil from burning.	○	○	○	○
0E5		Encoder receipt error	Cause : It shows that a proper data from the simple absolute PCB in PIO Converter was not received by the controller inside the ERC3 motor unit for Positioner Mode 2 and MEC Mode 2 in Simple Absolute Type. 1) Connector connection failure (If the detail code in the error list of the teaching tool is 0002H.) 2) Effect of noise (If the detail code in the error list of the teaching tool is 0001H.) 3) Malfunction of components (communication area) of the controller inside the ERC3 motor unit. Treatment : 1) Check if any wire breakage on a connector and the condition of wire connections. 2) Interrupt the power to the peripheral equipment and activate only the ERC3 actuator. If any error does not occur, it might be caused by noise. Take proper measures against noise. If the cause is due to 3) or 4), it is necessary to replace the ERC3. If the cause cannot be specified, please contact IAI.	○	○	○	○

Alarm Code	Alarm Level	Alarm Name	Cause/Treatment	Positioner Mode 1 Pulse Train Control Mode	Positioner Mode 2	MEC Mode 1	MEC Mode 2
0ED	Operation release	Absolute encoder error detection 1	Cause : The current position was changed while the controller inside the ERC3 motor unit is loading or saving the absolute data Treatment : Avoid a condition that gives vibration to the actuator.	○	○	○	○
0EE	Operation release	Absolute encoder error detection 2	Cause : The position data was not detected properly by the encoder for Positioner Mode 2 and MEC Mode 2 in Simple Absolute Type. 1) When the power is supplied for the first time to Simple Absolute applicable type (before executing absolute reset) 2) Voltage drop of absolute battery. (If the detail code in the error list of the teaching tool is 0001H.) 3) Connector connection failure (If the detail code in the error list of the teaching tool is 0002H.) 4) Changed the parameters Treatment : 2) Supply the power for 72 hours or more and after charging the battery enough, perform the absolute reset operation. If the same failure occurs often even with enough battery charge, it is considered the end of the battery life. Replace the battery. Conduct an absolute reset for 1), 2) and 4). [Refer to Chapter 6, 6.1 Absolute Reset and Absolute Battery]	○	○	○	○
0EF	Operation release	Absolute encoder error detection 3	The position data was not detected properly by the encoder for Positioner Mode 2 and MEC Mode 2 in Simple Absolute Type. (Encoder overspeed error) Cause : The current position changed with a speed more than the rotation velocity setting by an external cause during the power shutoff. Treatment : Set the rotation velocity to a higher speed than what currently is. If the same failure occurs again, it is necessary to have an absolute reset. [Refer to Chapter 6, 6.1 Absolute Reset and Absolute Battery]	○	○	○	○
0F4	Cold start	Mismatched PCB	This error would not occur in ERC3. If occurs, please contact IAI.	○	○	○	○
0F5	Operation release	Nonvolatile memory write verify error	It is verified at the data writing process to the non-volatile memory that the data inside the memory and the data to be written are matched. There was a mismatch detected in this process. Cause : Malfunction of non-volatile memory in the controller inside the ERC3 motor unit. Treatment : When the error is caused even when the power is re-input, please contact IAI.	○	○	○	○

Alarm Code	Alarm Level	Alarm Name	Cause/Treatment	Positioner Mode 1 Pulse Train Control Mode	Positioner Mode 2	MEC Mode 1	MEC Mode 2
0F6	Cold start	Nonvolatile memory write timeout	There is no response in the specified time duration during the data writing to the non-volatile memory. Cause : Malfunction of non-volatile memory in the controller inside the ERC3 motor unit. Faulty nonvolatile memory. Treatment : When the error is caused even when the power is re-input, please contact IAI.	○	○	○	○
0F8		Nonvolatile memory data destroyed	Abnormal data was detected during the nonvolatile memory check after starting. Cause : Malfunction of non-volatile memory in the controller inside the ERC3 motor unit. Treatment : When the error is caused even when the power is re-input, please contact IAI.	○	○	○	○
0FA		CPU error	CPU in the controller inside the ERC3 motor unit is not working properly. Cause : 1) Faulty CPU. 2) Malfunction due to noise. Treatment : When the error is caused even when the power is re-input, please contact IAI.	○	○	○	○
0FC		Logic error (Components' failure of the controller inside the ERC3 motor unit.)	Controller inside the ERC3 motor unit is not working properly. Cause : 1) Malfunction due to the effect of noise, etc. 2) Malfunction of peripheral circuit components. Treatment : Turn the power OFF and reboot. If the error occurs again, check for presence of noise. Also, if you have another ERC3 or PIO converter, replace it and try. A recurring error with the spare controller suggests presence of noise. If the cause cannot be identified, please contact IAI.	○	○	○	○
100 to 1FF	Message	Alarm on teaching tool	[Refer to the Instruction Manual of teaching tool.]	○	○	○	○
200 to 2FF	Operation release	Alarm on teaching tool	[Refer to the Instruction Manual of teaching tool.]	○	○	○	○
300 to 3FF	Cold start	Alarm on teaching tool	[Refer to the Instruction Manual of teaching tool.]	○	○	○	○

Chapter 8 Actuator Maintenance Check

8.1 Inspection Items and Schedule

Follow the maintenance inspection schedule below.
It is assumed that the equipment is operating 8 hours per day.
If the equipment is running continuously night and day or otherwise running at a high operating rate, inspect more often as needed.

[Slider Type]

	External visual inspection	Internal inspection	Greasing
Start of work inspection	○		
1-month inspection	○		
6-month inspection	○	○	
12-month inspection	○	○	○
Every 6 months thereafter	○		
Every 12 months thereafter	○	○	○

[Rod Type]

	External visual inspection	Internal inspection	Greasing
Start of work inspection	○		
1-month inspection	○		
3-month inspection	○		○ (Rod sliding surface)
Every 3 months since	○		○ (Rod sliding surface)
6-month inspection or every 5000km of operated distance	○	○	○ (Ball Screw/Guide)
Every 1 year thereafter	○	○	○ (Ball Screw/Guide)

8.2 External Visual Inspection

An external visual inspection should check the following things.

Main unit	Loose actuator mounting bolts, other loose items
Cables	Scratches, proper connections
Overall	Irregular noise, vibration

If the actuator is installed in the vertical orientation, the grease applied on the guide may drop in some environmental conditions. Clean and supply the grease when it is necessary.

8.3 Cleaning

- Clean exterior surfaces as necessary.
- Use a soft cloth to wipe away dirt and buildup.
- Do not blow too hard with compressed air as it may cause dust to get in through the gaps.
- Do not use oil-based solvents as they can harm lacquered and painted surfaces.
- To remove severe buildup, wipe gently with a soft cloth soaked in a neutral detergent or alcohol.

8.4 Internal Inspections for Slider Type

Turn OFF the power, remove the side cover and conduct a visual inspection.
When inspecting the interior, check the following items.

Main unit	Loose mounting bolts, other loose items
Guide section	Lubrication, buildup

Visually inspect the interior of the equipment. Check whether dust or other foreign matter has gotten inside and check the lubrication state.
The lubrication may have turned brown. This is not a problem as long as the travel surfaces shine as though they are wet.
If the grease is mixed with dust and does not have a shiny appearance, or if the grease has lost its efficacy due to prolonged use, then clean each section and reapply grease.
The procedure for internal inspections is outlined below.

1) Loosen the screws on the screw cover and detach the screw cover.
2) Check inside.
3) After finishing the inspection, assemble back in the reverse order. Make sure there is no interference to the slider when putting on the screw cover.

8.5 Internal Cleaning for Slider Type

- Use a soft cloth to wipe away dirt and buildup.
- Do not blow too hard with compressed air as it may cause dust to get in through the gaps.
- Do not use oil-based solvents, neutral detergent or alcohol.

8.6 Grease Supply

8.6.1 Grease Supply for Slider Type

(1) Grease Applied to Guide

IAI uses the following grease in our plant.

Guide	Idemitsu Kosan	Daphne Eponex Grease No.2

Other companies also sell similar types of grease. For details, give the above grease name to the manufacturer you want to purchase from and ask what corresponding product they have available. Here are some examples of similar products.

Showa Shell Oil	Albania Grease No.2
Mobil Oil	Mobilax 2

⚠ Warning: Never use anything other than synthetic poly- olefin grease. Mixing poly- grease with other grease not only reduces the performance of the grease, it may even cause damage to the actuator.

(2) Grease Applied to Ball Screw

IAI uses the following grease in our plant.

Ball Screw	Kyodo Yushi	Multitemp LRL 3

⚠ Warning: Never use anything other than synthetic poly- olefin grease. Mixing poly- grease with other grease not only reduces the performance of the grease, it may even cause damage to the actuator.

8.6.2 How to Supply Grease on Slider Type

1) Remove the thin-head screws with a 1.5mm hex wrench for SA5 and 2.0mm wrench for SA7.

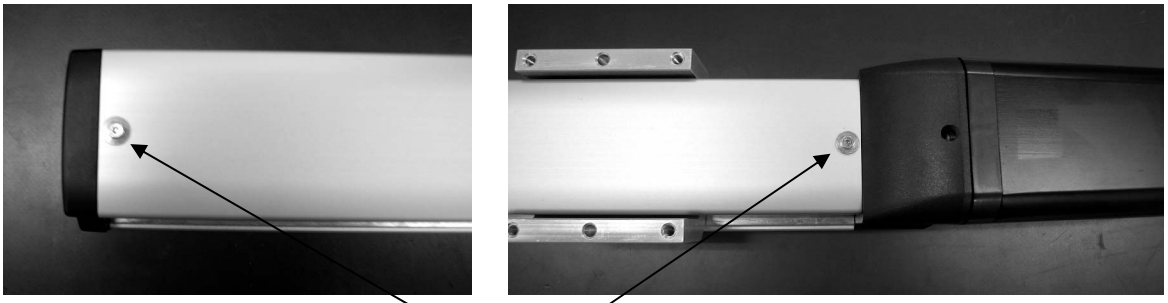

Thin-Head Screw

2) Detach the screw cover.

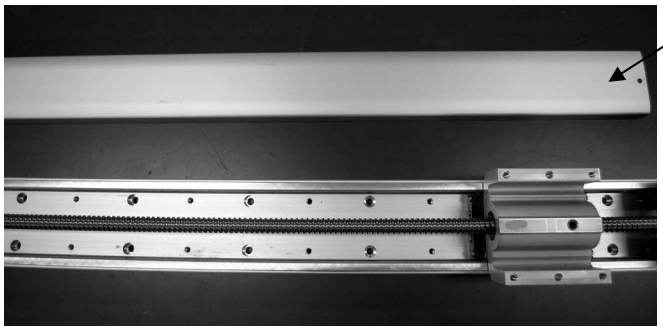

Screw Cover

3) After cleaning up the guide on both sides, apply the grease. Slide the slider back and forth to evenly apply the grease. Wipe off the excess grease at last.

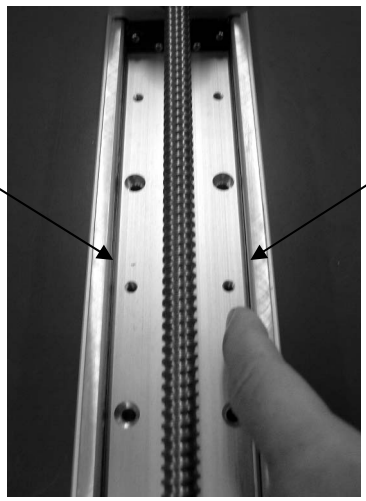

Guide

Guide

4) After cleaning up the ball screw, apply the grease by hand. Move the slider back and forth to evenly apply the grease.
For some of the low lead actuators, the slider would not move manually with hand. Move it with JOG operation of the controller.
Wipe off the excess grease at last.

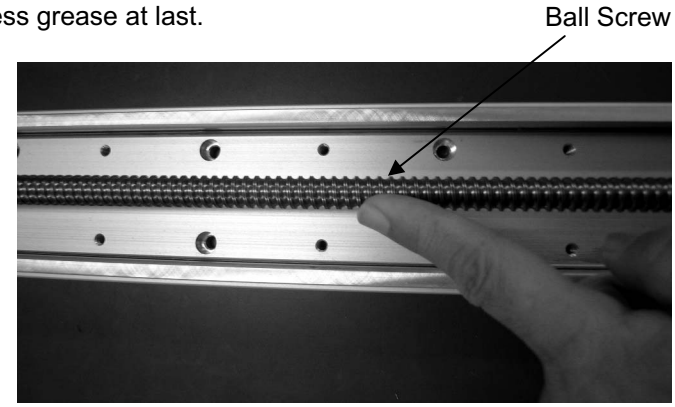

5) Attach the slider cover and tighten the thin-head screws with 1.5mm hex wrench for SA5 and 2.0mm wrench for SA7.

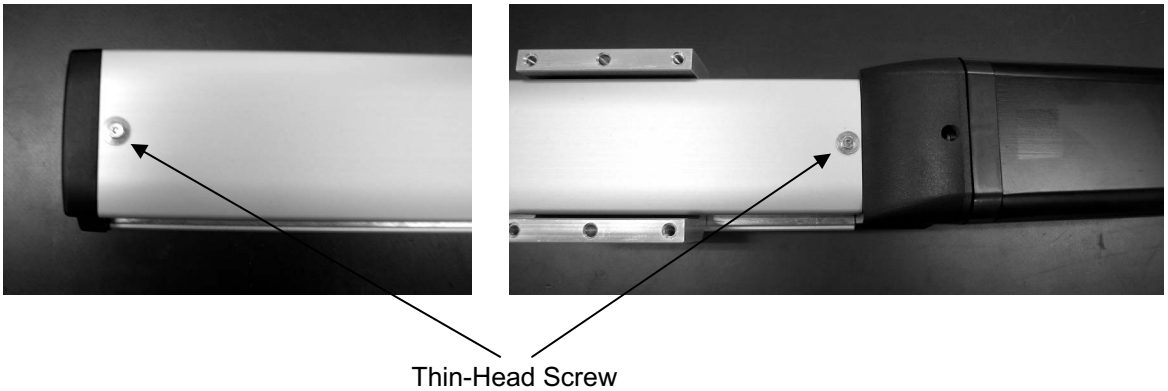

⚠ Caution: In case the grease got into your eye, immediately go see the doctor to get appropriate care.
After finishing the grease supply work, wash your hands carefully with water and soap to rinse the grease off.

8.6.3 Grease Supply for Rod Type

(1) Grease Applied to Ball Screw

IAI uses the following grease in our plant.

Ball Screw	Kyodo Yushi	Multitemp LRL 3

Use lithium grease spray for the maintenance work. Make it 1 sec or less to apply the spray in one time.

Wako Chemical	Spray Grease No. A161 or equivalent

⚠ Warning: Never use anything other than synthetic poly- olefin grease. Mixing poly- grease with other grease not only reduces the performance of the grease, it may even cause damage to the actuator.

8.6.4 How to Supply Grease on Rod Type

1) Remove the thin-head screw with a 1.5mm hex wrench.

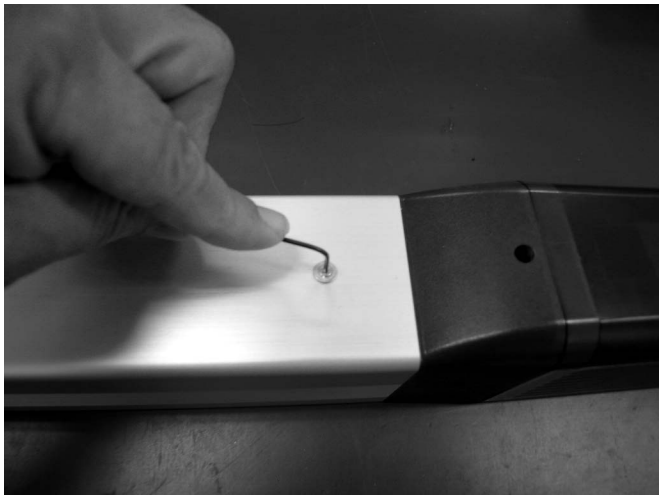

2) Slide the rod for more than the half of the stroke distance.
   For some of the low lead actuators, the rod would not move manually with hand. Move it with JOG operation of the controller.
   To supply grease to the ball screw, put the spray grease into the screw hole. (1 second or less for spraying)

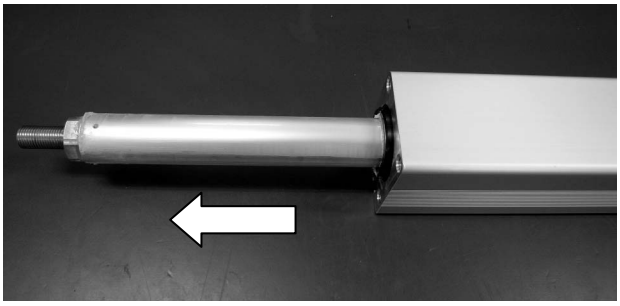

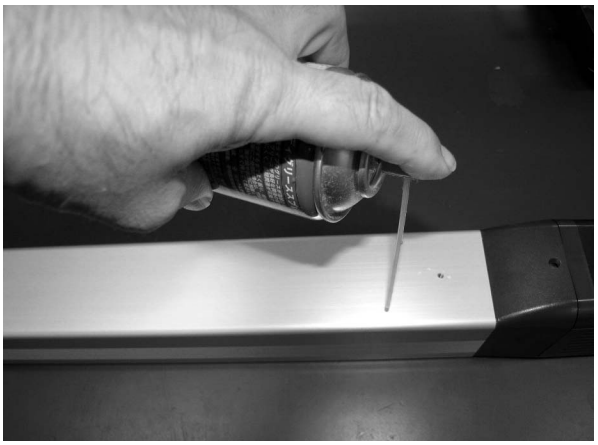

3) On the rod sliding part, apply grease by hand.

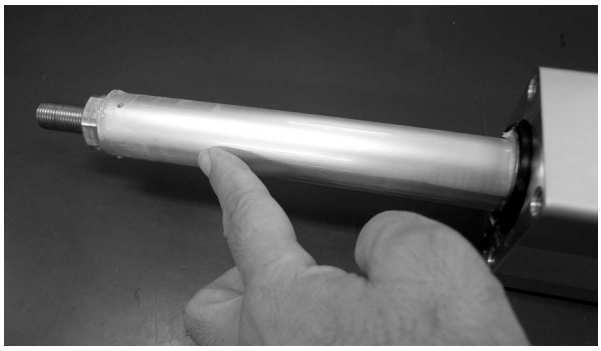

4) After applying the grease, move the rod back and forth so the grease spreads out evenly.
For some of the low lead actuators, the rod would not move manually with hand. Move it with JOG operation of the controller.

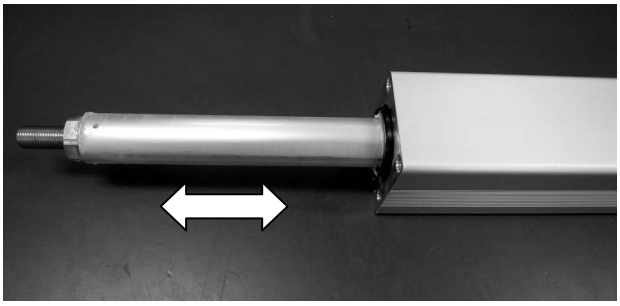

5) Reinstall the thin-head screw with a 1.5mm hex wrench.

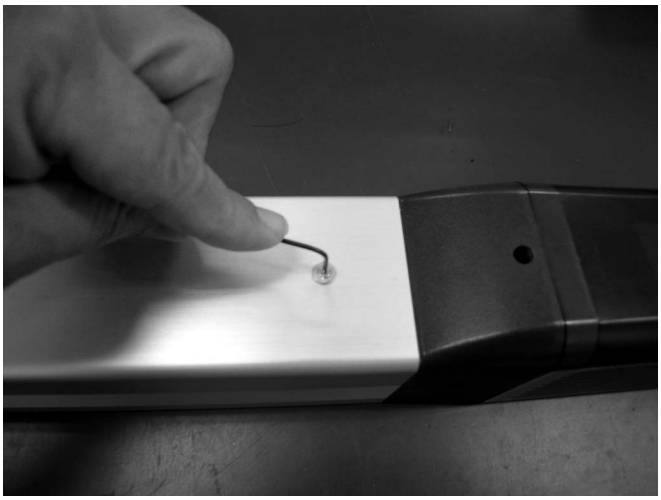

⚠ Warning: When supplying grease, do not attempt to use spray oil. Make sure to use spray grease. Also make sure to make the spraying time 1 second or less, and do not make it longer than 1 second in continuous or supply twice in quick cycle. If applying excess grease, the oil may flow to the electrical components and may cause an error operation.

⚠ Caution: In case the grease got into your eye, immediately go see the doctor to get appropriate care.
After finishing the grease supply work, wash your hands carefully with water and soap to rinse the grease off.

8.7 Motor Replacement Process

[Items required for replacing the motor]
• Motor Unit for Replacement
• Hex wrench set

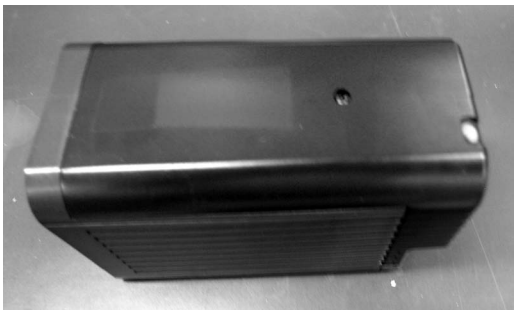

[Procedure]
1) Remove the screw affixing the actuator and motor unit with 2.5mm hex wrench for SA5 and SA4 and 3.0mm wrench for RA7 and RA6.

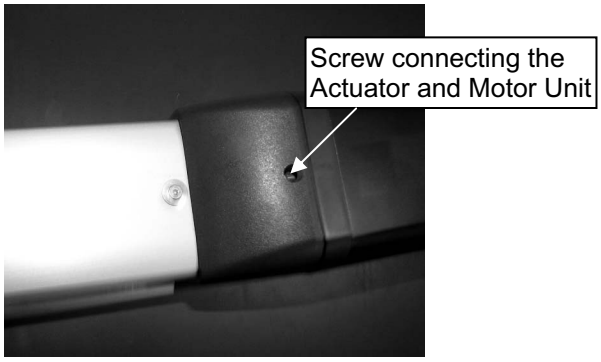

2) Detach the motor unit.

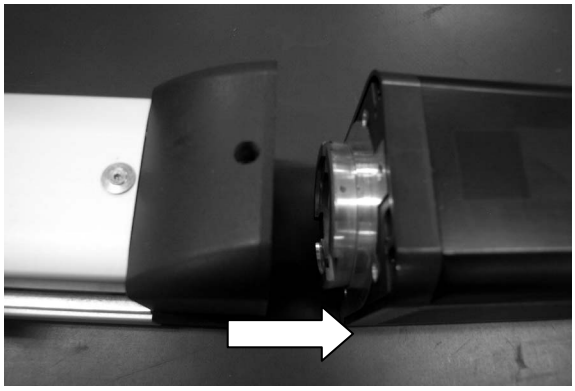

3) Make the profiles on the actuator side and motor unit side aligned so the projection matches to the slit.

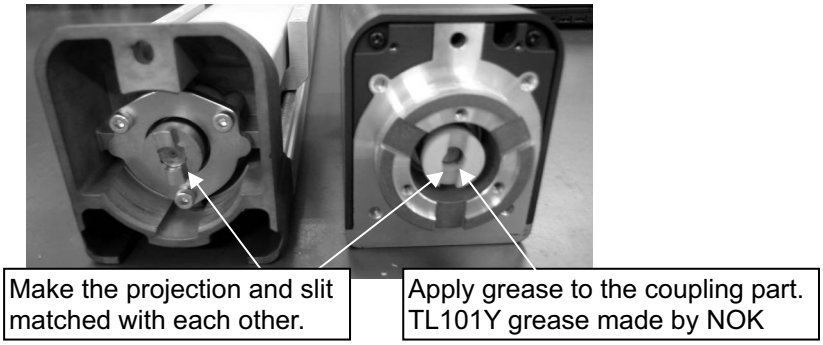

4) Attach the motor unit for replacement with the projection being matched with the slit.

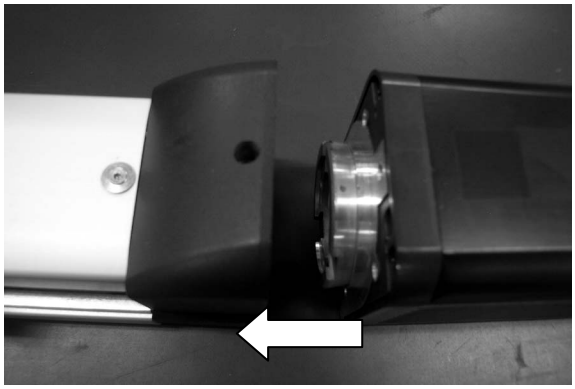

5) Tighten the screw to affix the motor unit to the actuator with 2.5mm hex wrench.

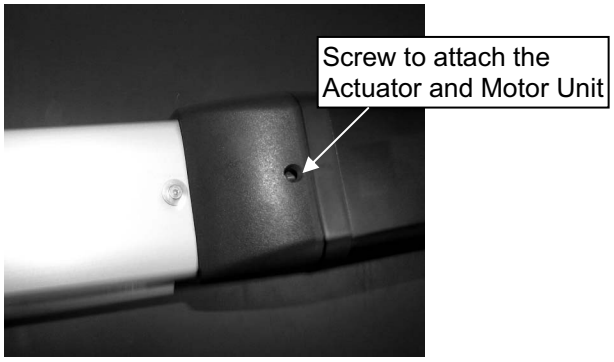

Chapter 9 External Dimensions

9.1 ERC3-SA5C

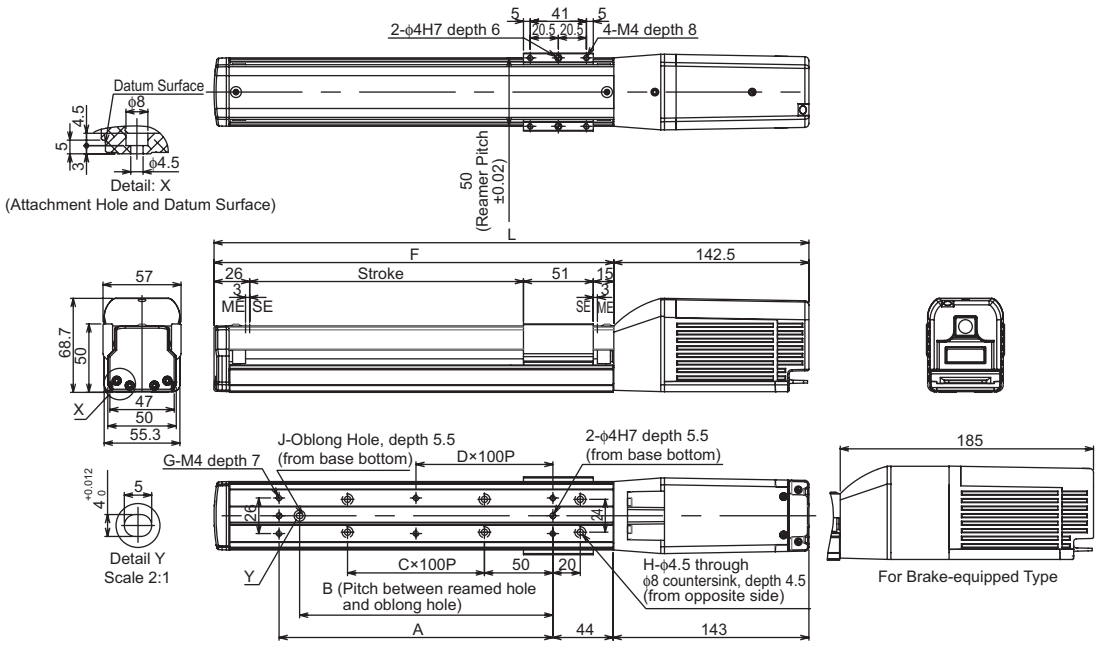

Stroke	L		A	B	C	D	F	G	H	J	Weight [kg]
	w/o Brake	With Brake									
50	284.5	327	73	0	0	0	142	4	4	0	1.4
100	334.5	377	100	85	0	0	192	4	4	1	1.5
150	384.5	427	100	85	1	0	242	4	6	1	1.6
200	434.5	477	200	185	1	1	292	6	6	1	1.7
250	484.5	527	200	185	2	1	342	6	8	1	1.9
300	534.5	577	300	285	2	2	392	8	8	1	2.0
350	584.5	627	300	285	3	2	442	8	10	1	2.1
400	634.5	677	400	385	3	3	492	10	10	1	2.2
450	684.5	727	400	385	4	3	542	10	12	1	2.3
500	734.5	777	500	485	4	4	592	12	12	1	2.4
550	784.5	827	500	485	5	4	642	12	14	1	2.5
600	834.5	877	600	585	5	5	692	14	14	1	2.7
650	884.5	927	600	585	6	5	742	14	16	1	2.8
700	934.5	977	700	685	6	6	792	16	16	1	2.9
750	984.4	1027	700	685	7	6	842	16	18	1	3.0
800	1034.5	1077	800	785	7	7	892	18	18	1	3.1

9.2 ERC3-SA7C

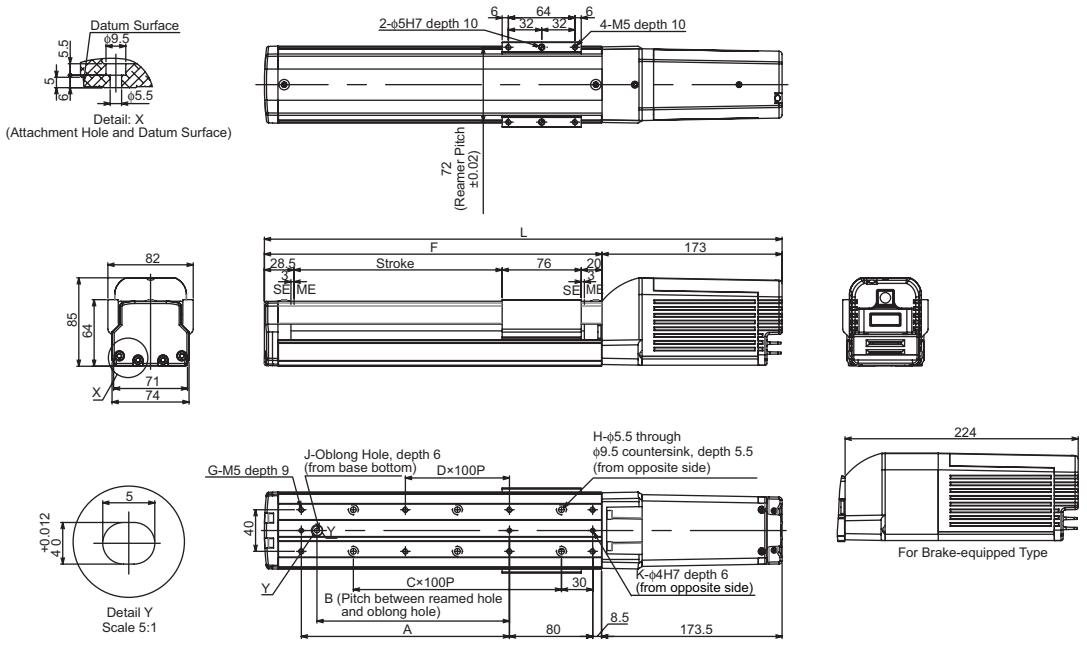

Stroke	L		A	B	C	D	F	G	H	J	K	Weight [kg]
	w/o Brake	With Brake										
50	347.5	398.5	0	0	1	0	174.5	4	4	0	2	3.2
100	397.5	448.5	100	85	1	0	224.5	6	4	1	3	3.4
150	447.5	498.5	100	85	2	0	274.5	6	6	1	3	3.6
200	497.5	548.5	200	185	2	1	324.5	8	6	1	3	3.8
250	547.5	598.5	200	185	3	1	374.5	8	8	1	3	4.0
300	597.5	648.5	300	285	3	2	424.5	10	8	1	3	4.3
350	647.5	698.5	300	285	4	2	474.5	10	10	1	3	4.5
400	697.5	748.5	400	385	4	3	524.5	12	10	1	3	4.7
450	747.5	798.5	400	385	5	3	574.5	12	12	1	3	4.9
500	797.5	848.5	500	485	5	4	624.5	14	12	1	3	5.1
550	847.5	898.5	500	485	6	4	674.5	14	12	1	3	5.4
600	897.5	948.5	600	585	6	5	724.5	16	14	1	3	5.6
650	947.5	998.5	600	585	7	5	774.5	16	16	1	3	5.8
700	997.5	1048.5	700	685	7	6	824.5	18	16	1	3	6.0
750	1047.5	1098.5	700	685	8	6	874.5	18	18	1	3	6.2
800	1097.5	1148.5	800	785	8	7	924.5	20	18	1	3	6.5

9.3 ERC3-RA4C

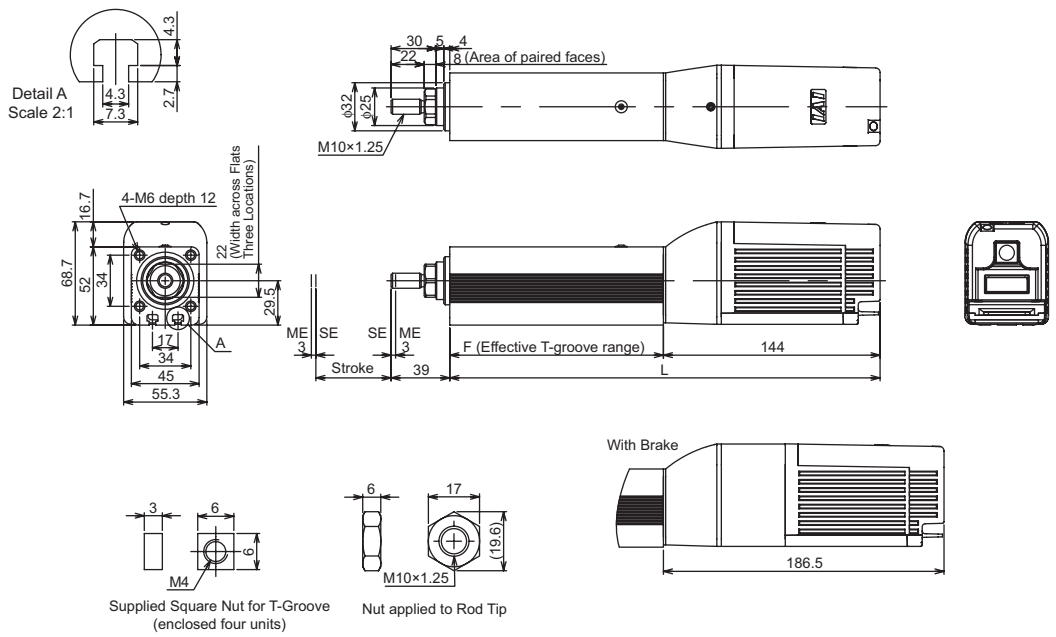

Stroke	L		F	Weight [kg]
	w/o Brake	With Brake		
50	286	328.5	142	1.4
100	336	378.5	192	1.7
150	386	428.5	242	2.0
200	436	478.5	292	2.3
250	486	528.5	342	2.6
300	536	578.5	392	2.9

9.4 ERC3-RA6C

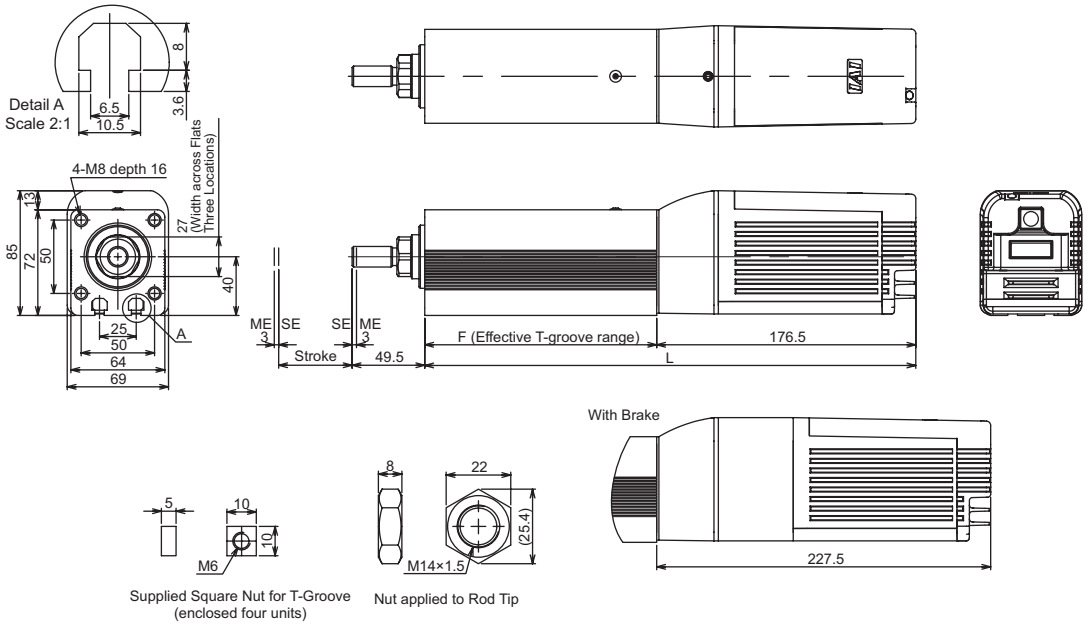

Stroke	L		F	Weight [kg]
	w/o Brake	With Brake		
50	334.5	385.5	158	3.9
100	384.5	435.5	208	4.4
150	434.5	485.5	258	4.9
200	484.5	535.5	308	5.4
250	534.5	585.5	358	5.9
300	584.5	635.5	408	6.4

Chapter 10 Appendix

10.1 Input and Output Response Performance When PIO Converter is Used

When controlling ERC3 with using PIO converter, there is a delay in the response time as described below;

1) Input Delay Time of PIO Converter
   The digital input time constant with the hardware is 2ms at maximum. The digital input filter time with the firmware is 5ms at maximum. Therefore, there is 7ms of input response time in total for PIO converter.

2) Communication Cycle Time (I/O Update Time) of PIO Converter
   5ms at maximum is required for the communication cycle time of PIO converter under the condition that there is no failure in the communication. The cycle time should be 10ms at maximum with a communication error occurred.

3) Delay Time in Output Operation
   There should be no delay time in the digital output operation of the firmware. It outputs the output data received from ERC3 in communication cycle every time.

Considering the time described above, the timing for the input and output signals should be as shown below;

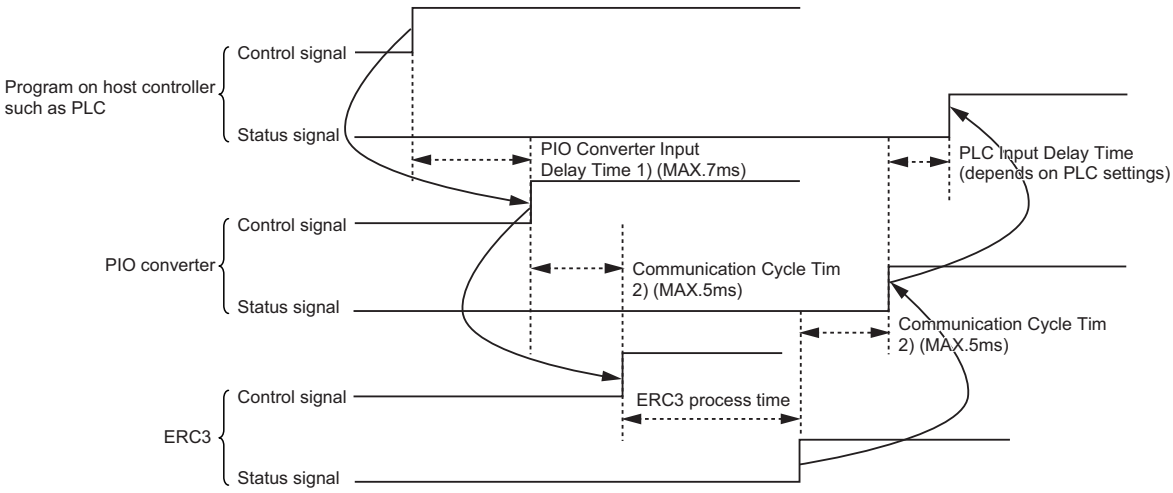

10.2 Way to Set Multiple Controllers with 1 Teaching Tool

Settings of several controller units can be performed with 1 unit of teaching tool with the method stated below if using PIO converter. ERC3 should be in CON Mode.
The following method cannot be applied if ERC3 is in the serial communication type.

It is usually necessary to connect the teaching tool to the controllers one by one when making a setup to multiple controllers with one unit of teaching tool. In this section, explains how to perform the settings without connecting and disconnecting the plug.

- Requisite devices :
  (1) SIO Converter (RCB-TU-SIO-A or RCB-TU-SIO-B) : 1 unit
  (2) Controller Link Cable (CB-RCB-CTL002) : Required by the number of controllers

  Accessories
  1) 4-way junction (Manufactured by AMP 5-1473574-4) : 1 unit
  2) e-CON Connector (Manufactured by AMP 4-1473574-4) : 1 unit
  3) Terminal Resistance (220Ω, with a e-CON connector) : 1 unit

Instead of the e-CON cable attached to the controller link cable, a terminal block may be used. In this configuration, disconnect the e-CON connector from the controller link cable.

10.2.1 Connecting Example

⚠ Caution: Supply 0V to the SIO converter and each controller from the same power source.

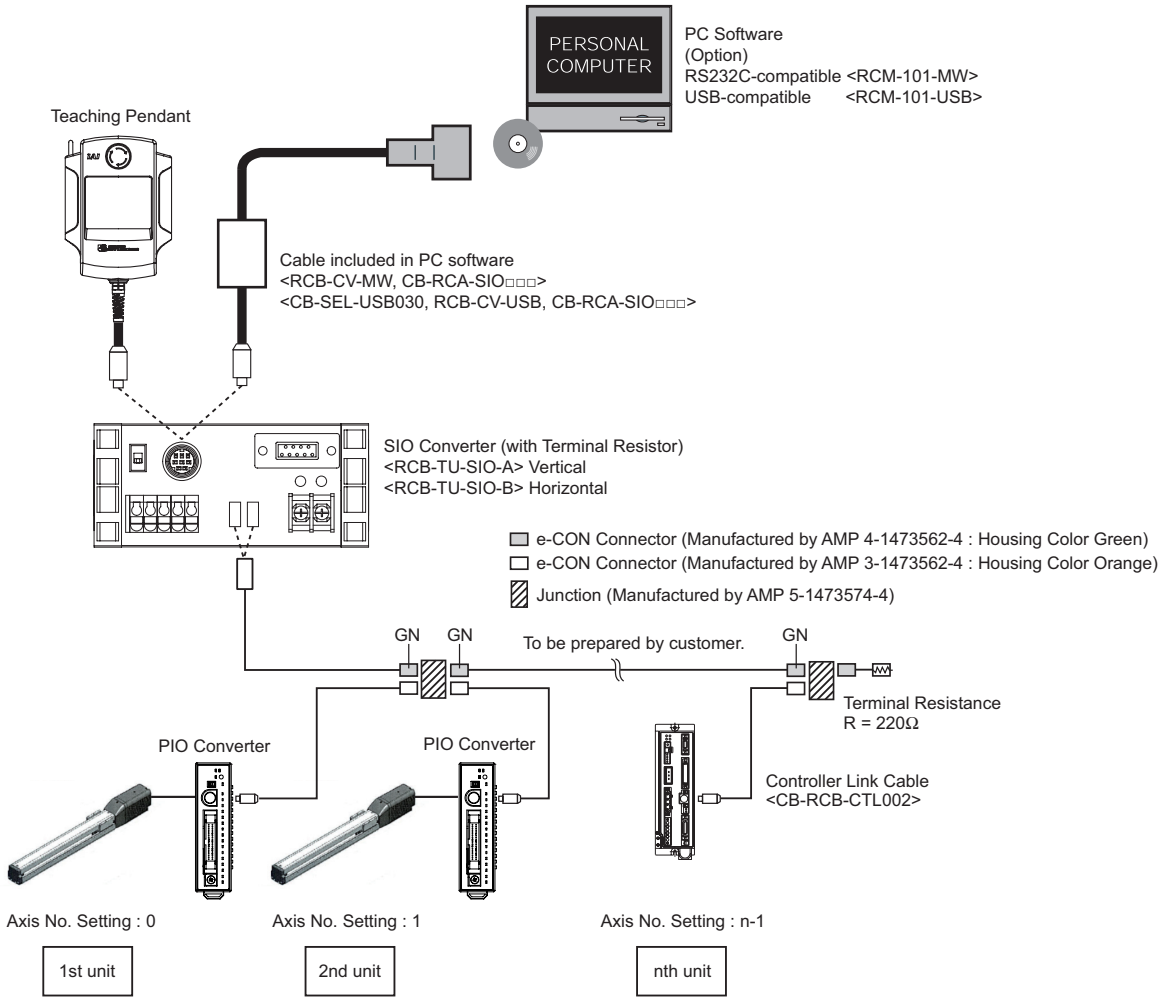

10.2.2 Detailed Connection Diagram of Communication Lines

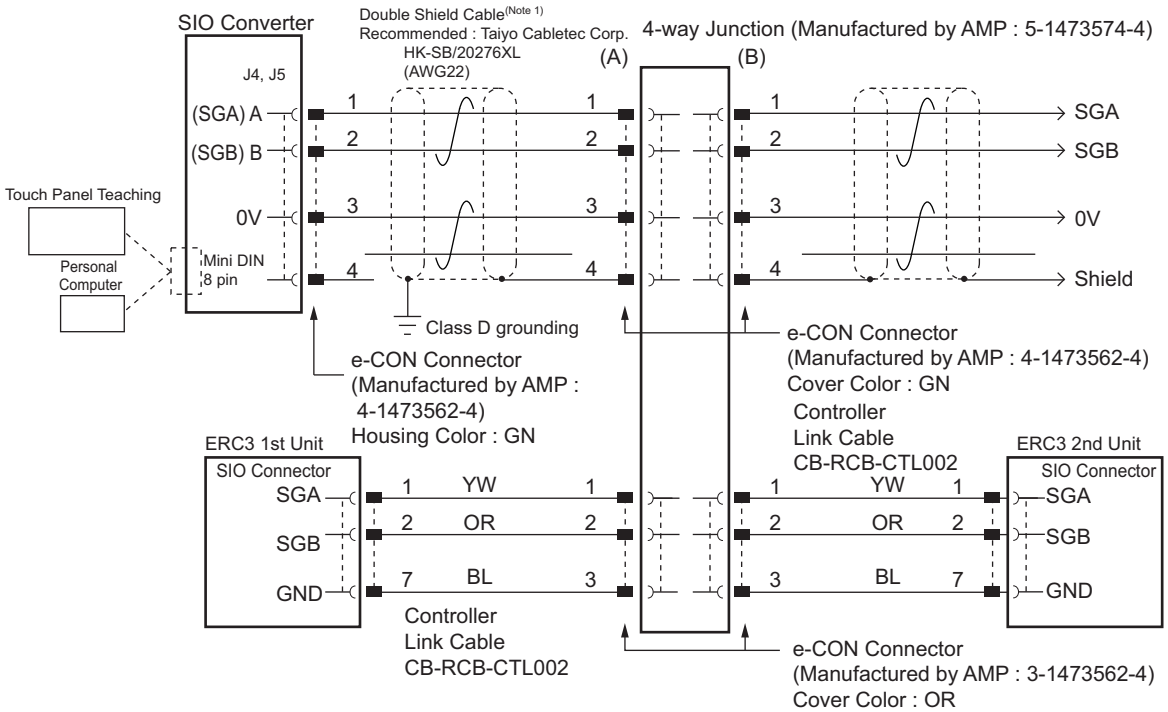

(Note 1) Apply a 2-pair shielded cable.
When connecting a cable other than recommended to (A) and (B), make sure to use a hard-cored cable equivalent to the vinyl cable (KIV) dedicated for control devices with the sheath outer diameter from 1.35 to 1.60mm. Using cables with outer diameter out of the specification may cause poor contact to occur.

> ⚠ Caution: When cables with outer diameter out of the specification are used, use a terminal block instead of 4-direction junction. In this configuration, disconnect the e-CON connector of the link cable. If an error possibly caused by poor contact occurs frequently, replace the junction with the terminal block.

10.2.3 Axis No. Setting

Connect the PC software or teaching pendant and select the axis number.
Supply power to the controller only for the set axis number.

> ⚠ Caution: The axis number must be unique.

10.2.4 Handling of e-CON connector (how to connect)

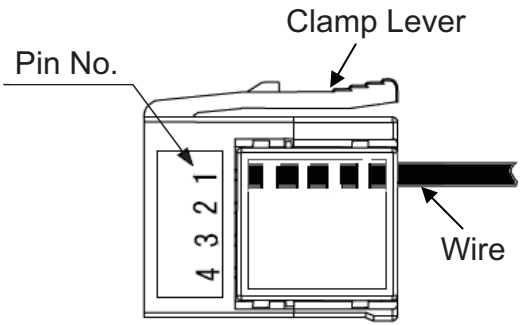

1) Check the applicable cable size.
   Check the applicable cable. If it is not applicable, it may cause a connection failure or a breakage of the connector.
2) Check the pin numbers, do not reveal the sheath, and insert the cable till it reaches the end.
   Revealing the sheath may cause a failure such as short circuit or cable fall out.

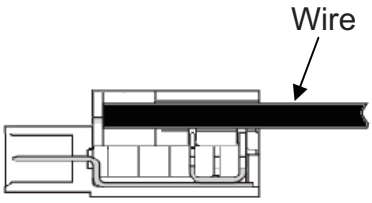

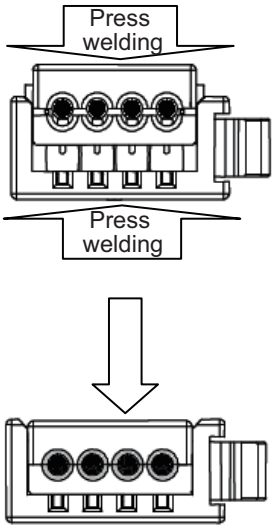

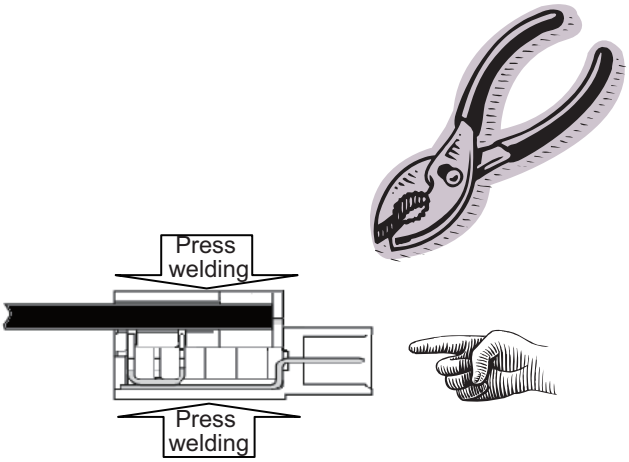

3) Use a (generally purposed) parallel plier with the width of 10mm or more to press-weld the cable from top and bottom.
   Use the parallel plier from the direction of ☞, grip it while checking the condition of press-welding to make sure the press is in right angle and press it until it becomes completely flat to the housing.
   If the inserting is not enough, it may not be able to attach to the socket or may cause a contact failure.
4) After finishing the press-welding, pull the cable lightly to confirm that won't come out.

⚠ Caution :
1) e-CON connector cannot be reused once the press-welding is failed. Use a new connector to retry the press-welding.
2) When connecting to the socket, hold the connector with care not to touch the clamp lever, insert the connector in parallel to the socket until the clamp lever makes a "click" sound.
3) After joining to the socket, do not pull the cables or pull the connector without releasing the lock of the clamp lever.

10.2.5 SIO Converter

The SIO converter converts the communication mode from RS232C to RS485 or vice versa.

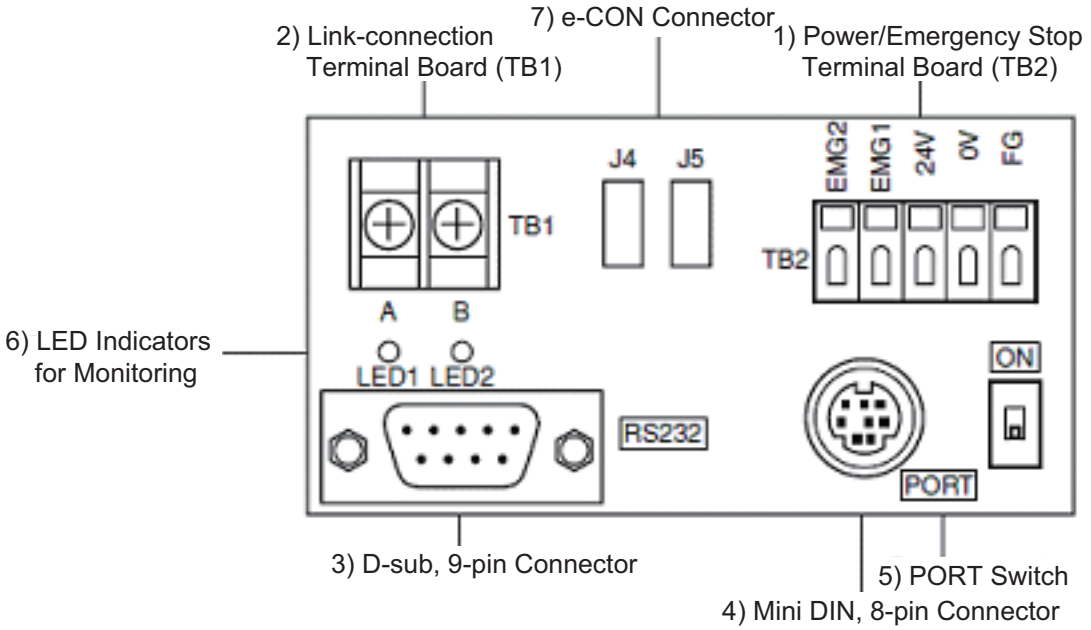

1) Power/Emergency Stop Terminal Board (TB2)

Symbol	Description
EMG1, EMG2	Turn the PORT switch ON to output the emergency stop switch signal, OFF to short-circuit EMG1 and EMG2. When applying the emergency stop switch of the teaching pendant to the emergency stop of the system, obtain the signal from here.
24V	Positive side of the 24V DC power supply (Power supply for the teaching pendant and conversion circuit.)
0V	Negative side of the 24V DC power supply
FG	Frame ground

(Note) 0V is connected to the pin No. 7 (GND) on the communication connector for the controller.

● Connection method

Use a connection cable satisfying the following specifications :

Item	Specification
Applicable wire	Solid Wire : ϕ0.8 to 1.2mm/Stranded : AWG Size 20 to 18 (0.5 to 0.75mm^2)
Stripped wire length	10mm

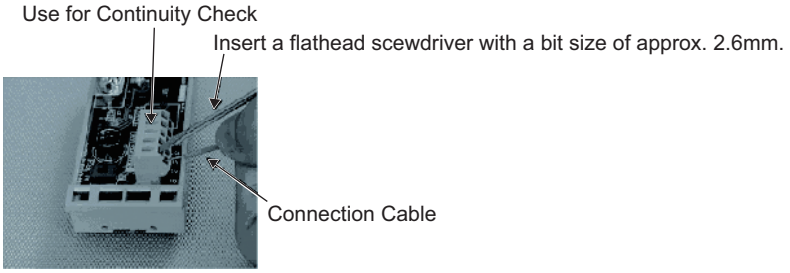

2) Link-connection Terminal Board (TB1)
This is the connection port to obtain communication connection with the controller.
Connect terminal “A” on the left side to communication line SGA of the controller. (Terminal A is connected to pin 1 of (7) internally.)
Connect terminal “B” on the right side to communication line SGB of the controller. (Terminal B is connected to pin 2 of (7) internally.)
Use a twisted pair shielded cable for the connection of SGA and SGB to TB1.

3) D-sub, 9-pin connector
A connection port with the PC. (RS232C)
It is used when the operation is conducted with using SIO communication.

4) Mini DIN, 8-pin connector
This connector is connected to PC software, teaching pendant.

5) PORT Switch
The port switch is used to enable/disable connector (4).
Set the switch to ON if connector (4) is used or OFF if not used.
The switchover of valid/invalid on the teaching pendant is held at the same time as the emergency stop button switch signal output (between EMG1 and 2).

6) LED Indicators for Monitoring
LED1 : Lights/blinks while the controller sends signals.
LED2 : Lights/blinks while signals are sent from the RS232C connector.

7) e-CON Connector
It is used when connecting to the controller with e-CON connector without using 2).

10.2.6 Communications Cable

1) Controller Link Cable (CB-RCB-CTL002)

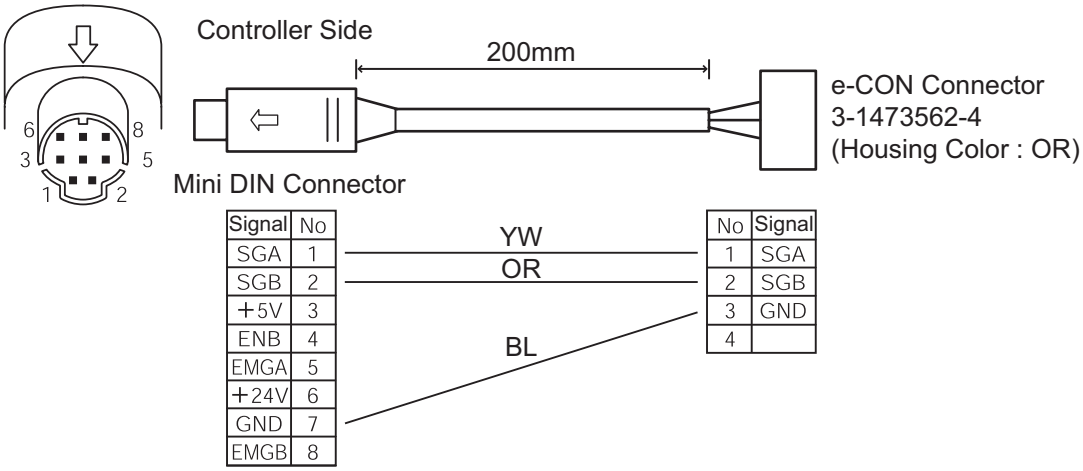

Signal	No
SGA	1
SGB	2
+5V	3
ENB	4
EMGA	5
+24V	6
GND	7
EMGB	8

No	Signal
1	SGA
2	SGB
3	GND
4	

10.3 Conformity to Safety Category

In this section shows an example of a circuit using the dedicated teaching pendant. However, it is not possible for us to check the conformity of our product to the condition of your system. Therefore, it is necessary that the user construct the circuit considering the condition of use and the categories to be applied.

[1] System Configuration

In the case it is necessary to construct a system complying with Safe Category (ISO12100-1), use the following teaching pendant.

(1) CON-PGA (Touch Panel Teaching)

Also, TP adapter (Model : RCB-LB-TG) is required.

The system can conform to up to safety category B to 4 (ISO12100-1) by changing connections of system I/O connectors.

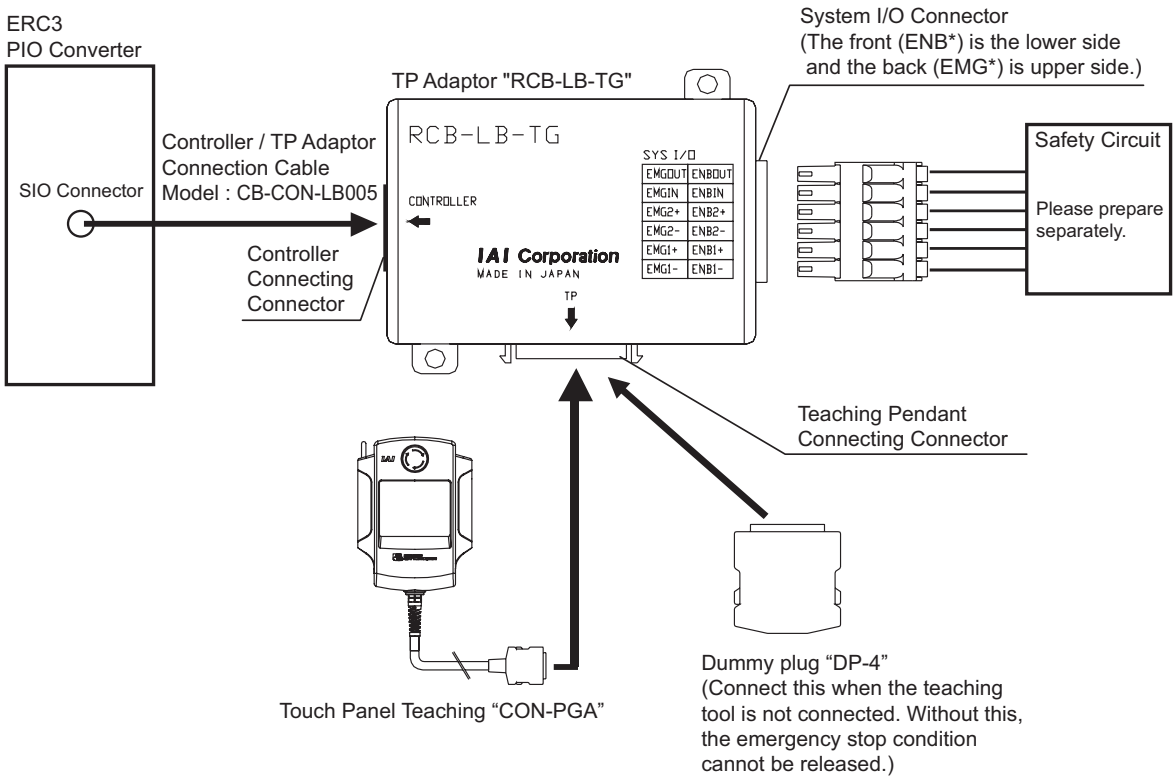

[2] Wiring and setting of safety circuit

1) Power supply
To use safety relays and/or contactors of 24V DC specification in the safety circuit, the control power supply should be used only for the circuit as much as possible. (Do not use the same power source as the driving power supply for this controller.)
It is the risk prevention treatment preparing for the cases such as the operation error of the safety circuit caused by not enough power capacity.

2) Specification of system I/O connector for TP adapter

Connector Name		System I/O Connector		Applicable Wire
Upper side (EMG side)	Cable side	FMC1.5/6-ST-3.5(Note 1)	PHOENIX CONTACT	AWG24 to 16 (0.2 to 1.25m^2)
	TP adapter side	MCDN1.5/6-G1-3.5P26THR		
Lower side (ENB side)	Cable side	FMC1.5/6-ST-3.5(Note 1)		
	TP adapter side	MCDN1.5/6-G1-3.5P26THR		

	Pin No.	Signal name	Description
Upper side (EMG side)	1	EMG1-	Emergency stop contact 1 (30V DC or less, 100mA or less)
	2	EMG1+	
	3	EMG2-	Emergency stop contact 2 (30V DC or less, 100mA or less)
	4	EMG2+	
	5	EMGIN	Emergency stop detection input
	6	EMGOUT	24V power supply output for emergency stop detection input
Lower side (ENB side)	7	ENB1-	Enable contact 1 (30V DC or less, 100mA or less)
	8	ENB1+	
	9	ENB2-	Enable contact 2 (30V DC or less, 100mA or less)
	10	ENB2+	
	11	ENBIN	Enable detection input
	12	ENBOUT	24V power supply output for enable detection input

Note 1 Connectors on the cable side are attached under conditions where initial wiring has been conducted.
In order to support each category, remove the initial wiring and wire your safety circuit.

● Upper side EMG connector

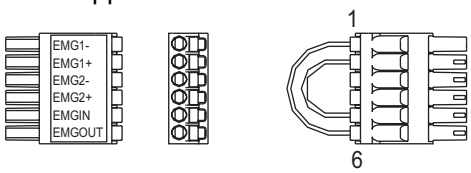

● Lower side ENB connector

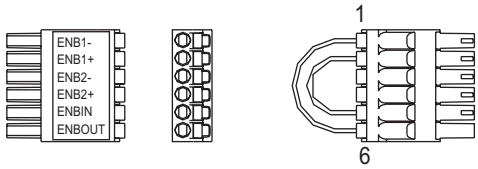

Wiring	Color	Signal	No.
AWG24	YW	EMG1-	1
	YW	EMG1+	2
	—	EMG2-	3
	—	EMG2+	4
	YW	EMGIN	5
	YW	EMGOUT	6

Wiring	Color	Signal	No.
AWG24	YW	ENB1-	1
	YW	ENB1+	2
	—	ENB2-	3
	—	ENB2+	4
	YW	ENBIN	5
	YW	ENBOUT	6

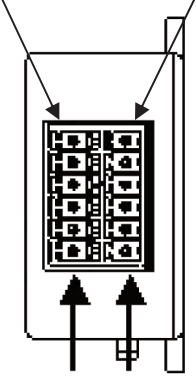

TP Adapter Side View

3) Connection of dummy plug of TP adapter
When operating the controller with AUTO Mode, make sure to connect the enclosed dummy plug to TP Connector.

4) Enable function*
If you are using the enable function, set it to Enable using the controller parameter.
Parameter No.42 Enable function
0 ··· Enable
1 ··· Disable [Default setting at shipment]

* Enable function : It is the function to monitor the status of the signal (safety switch, dead man's switch on teaching pendant, etc.) to permit the devices to operate.

[3] Examples of safety circuits

1) In case of category 1

CON-PGA
(or Dummy plug : DP-4)

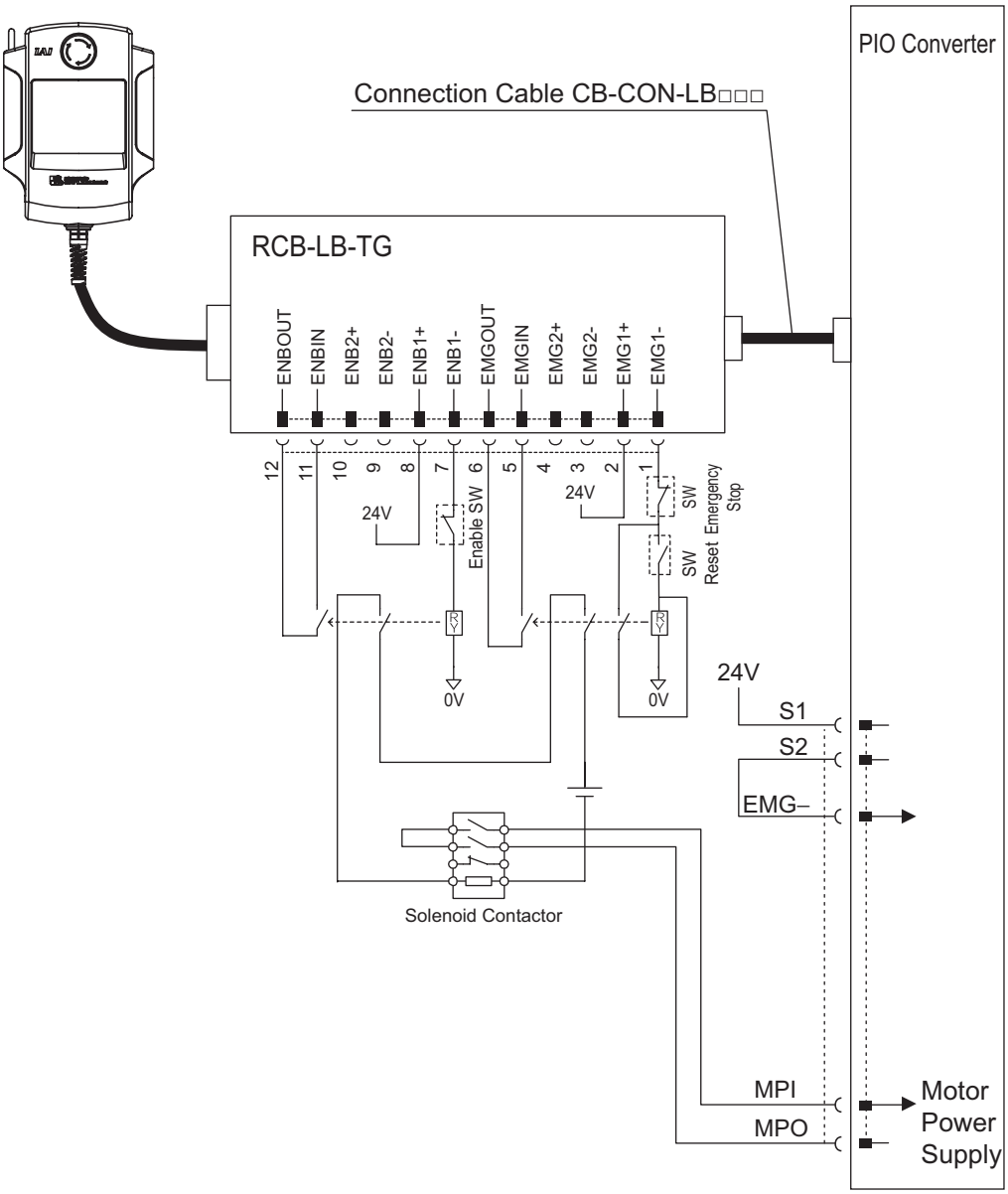

- Detailed category 1 circuit example

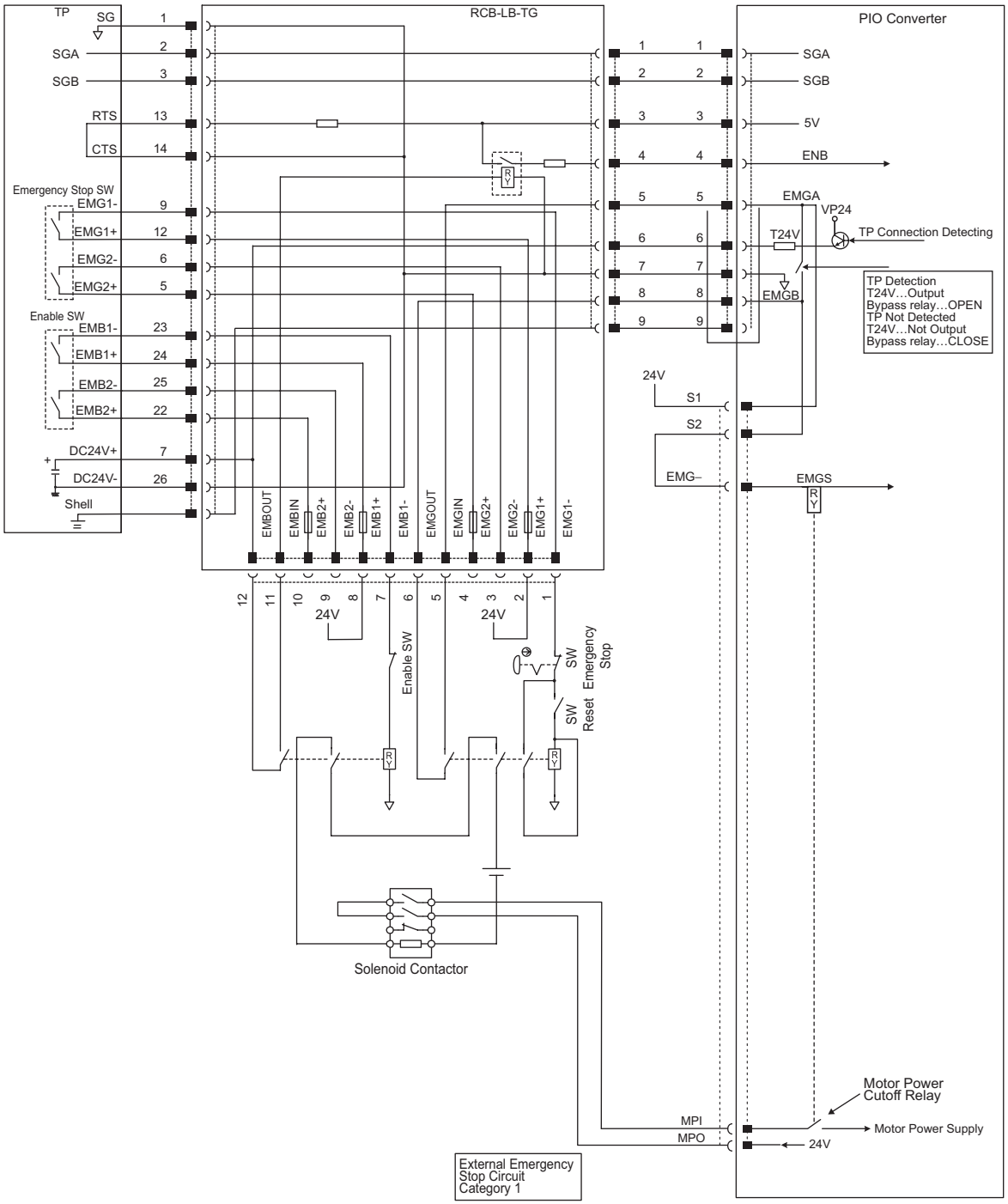

2) In case of category 2

CON-PGA
(or Dummy plug: DP-4)

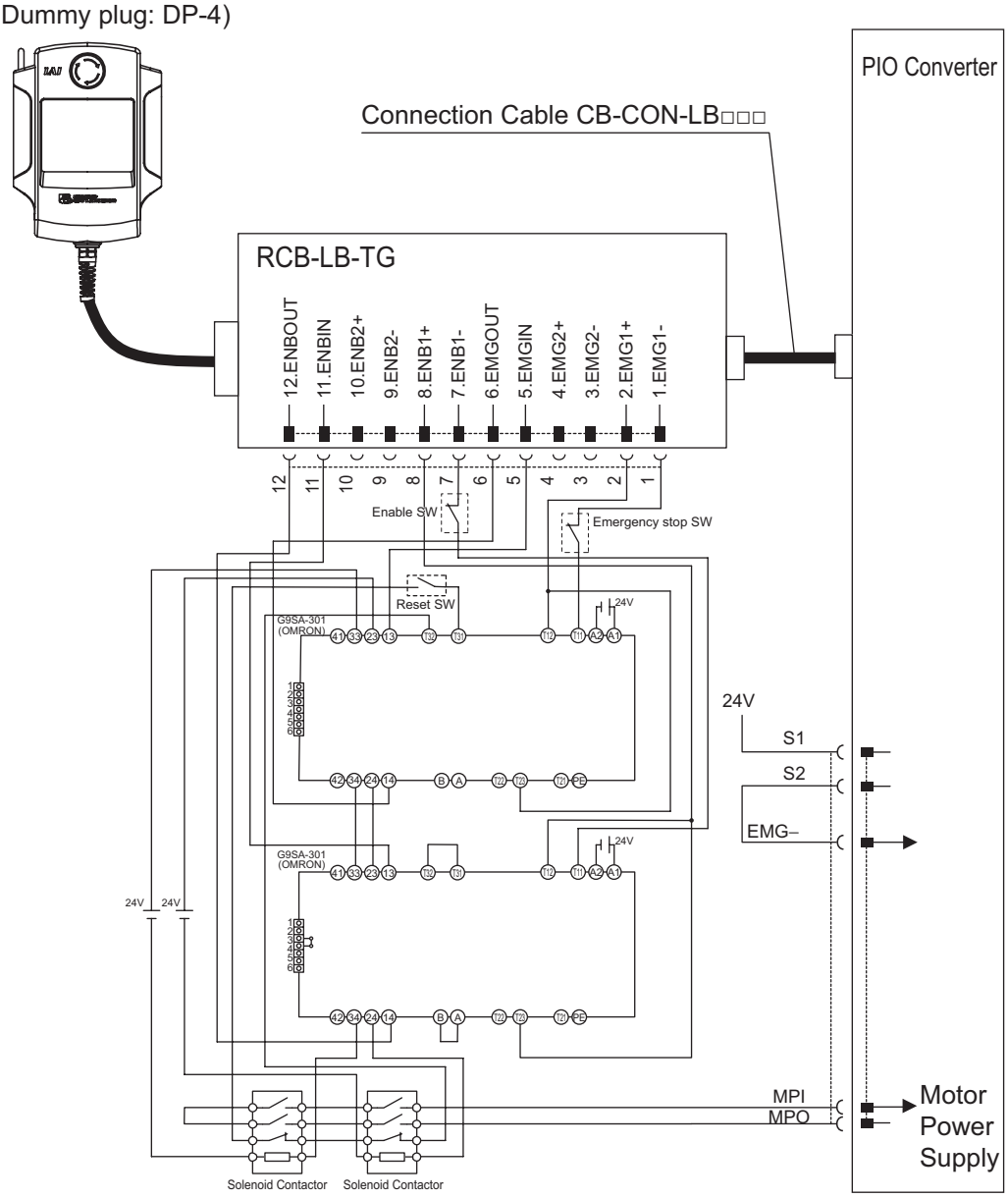

- Detailed category 2 circuit example

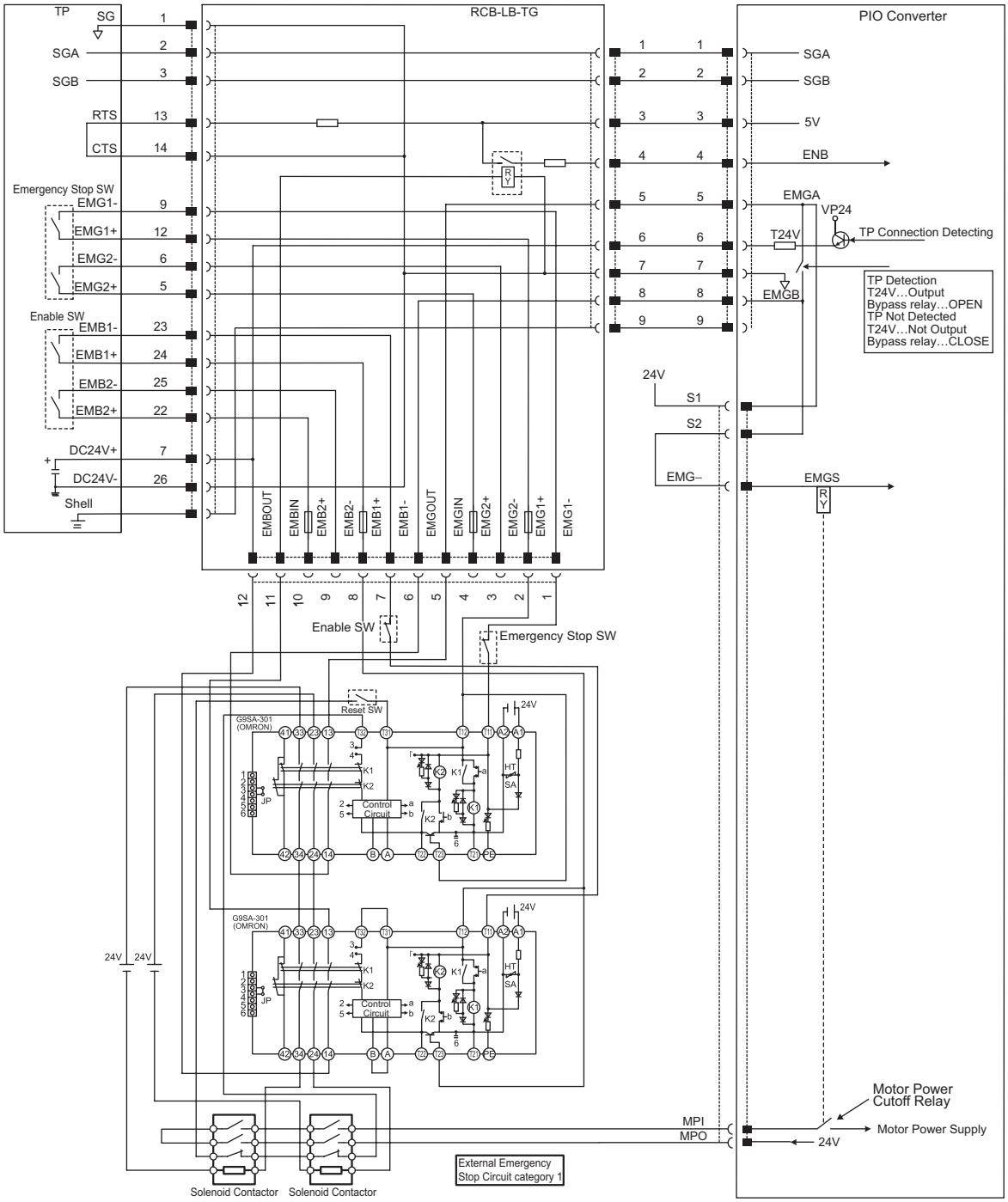

3) In case of category 3 or 4

CON-PGA
(or Dummy plug: DP-4)

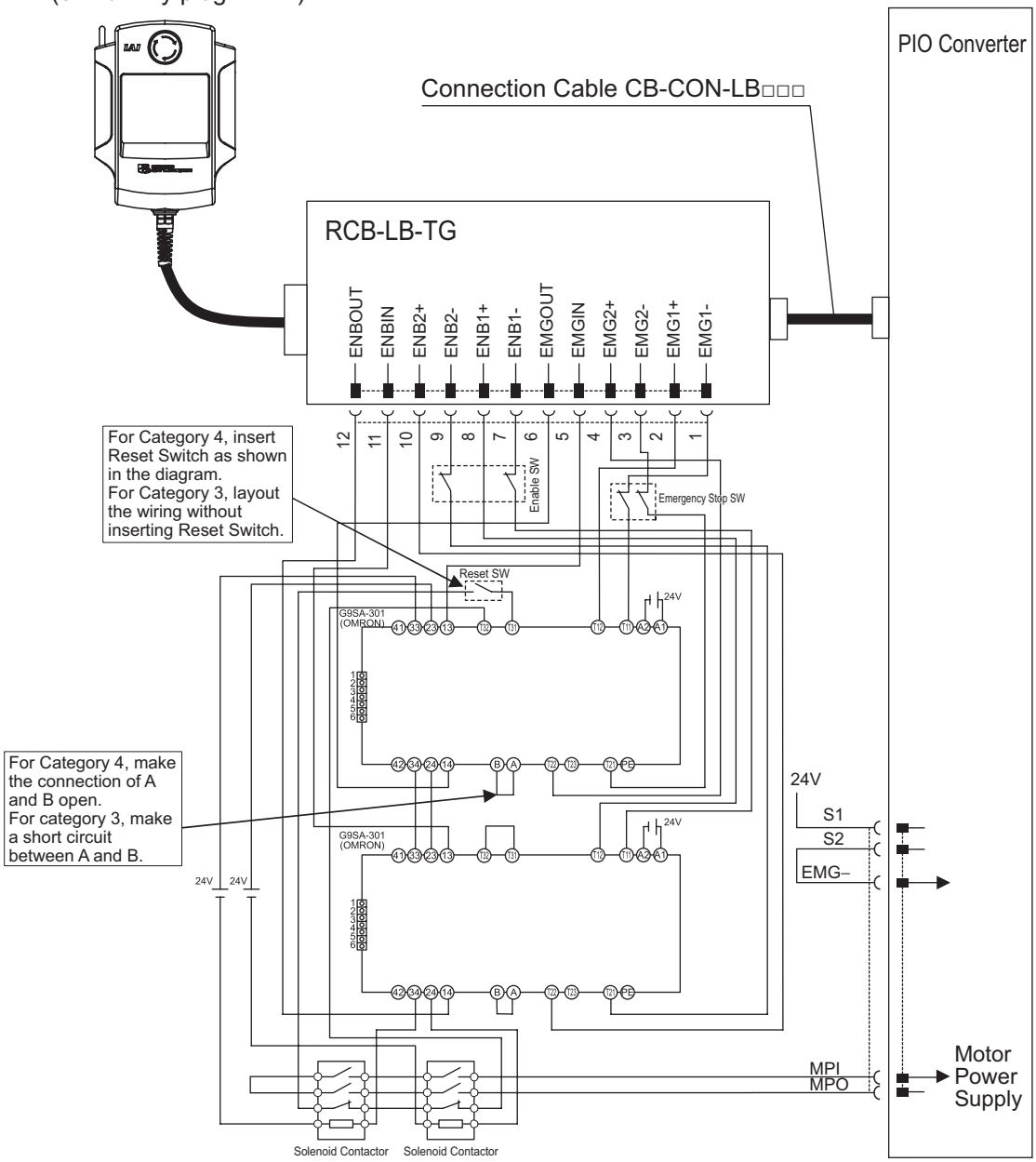

- Detailed category 3 or 4 circuit example

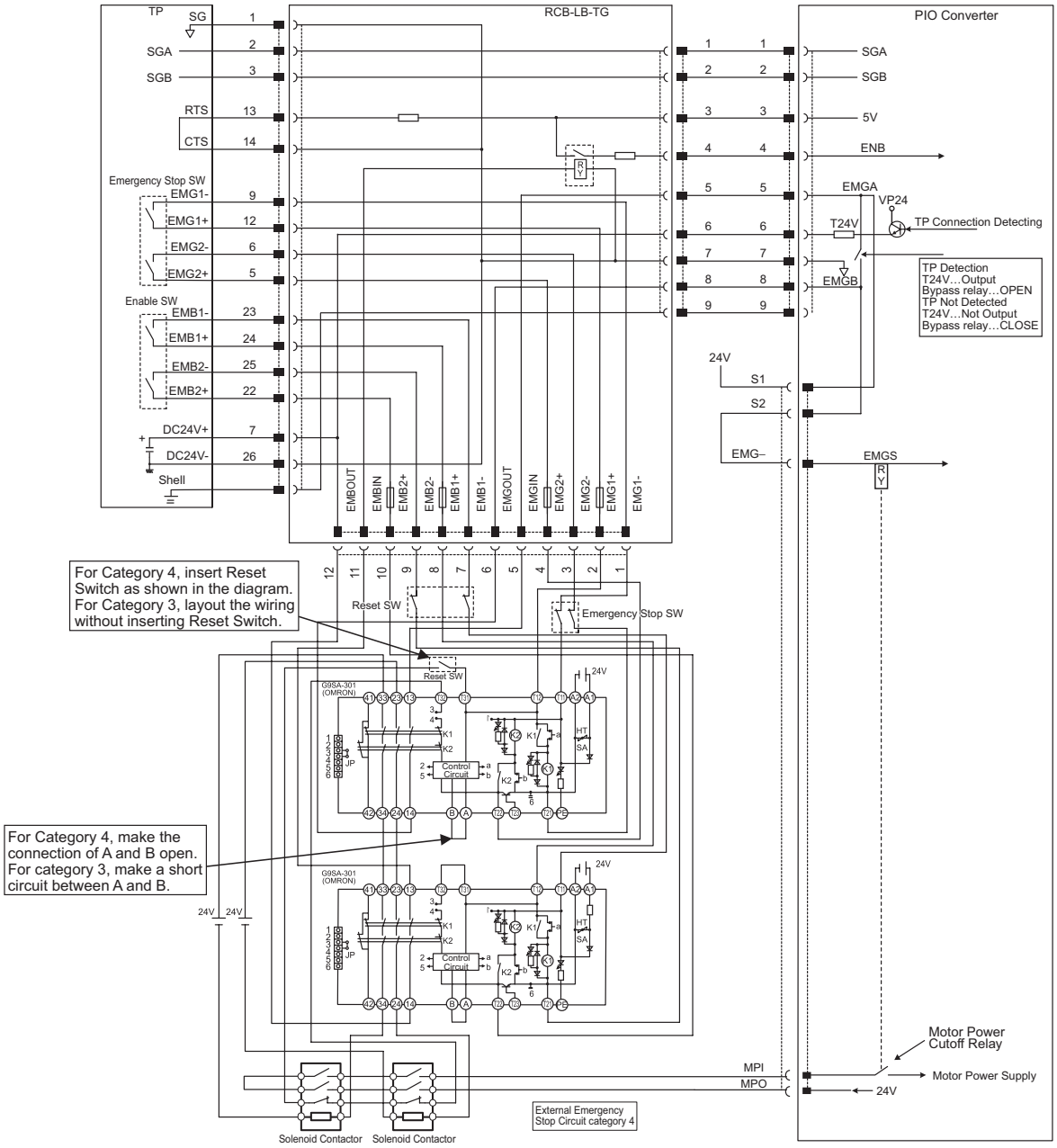

[4] TP adapter and accessories

1) TP adapter external dimensions

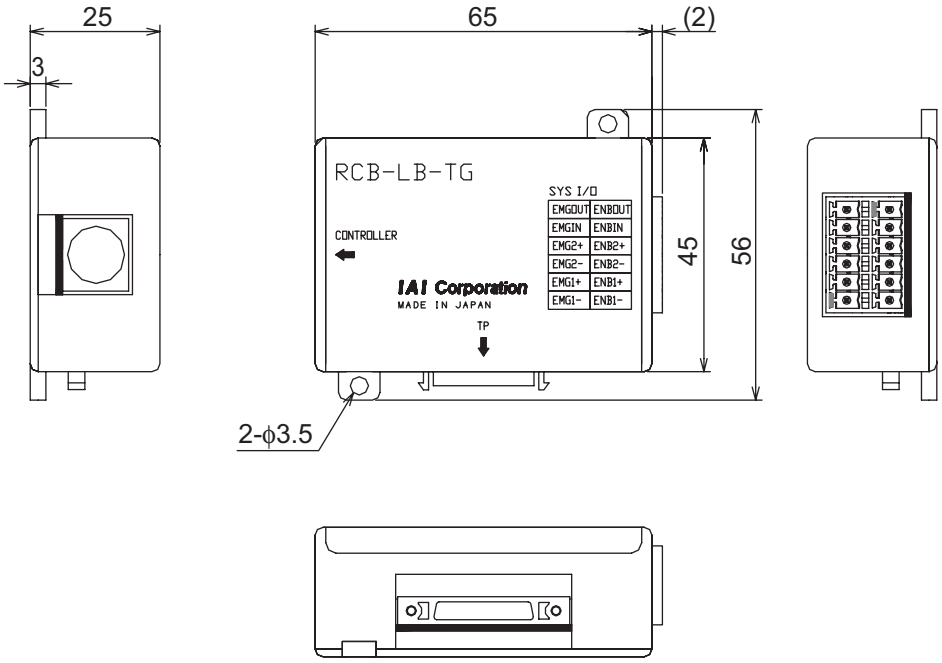

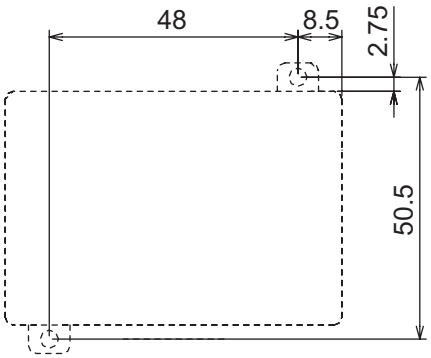

2) Connection Cable (Accessories)

- Controller/TP Adaptor Connection Cable
  Use this cable to connect the controller and TP adapter (RCB-LB-TG).
  Model : CB-CON-LB005 (standard cable length : 0.5m)
  Maximum cable length : 2.0m

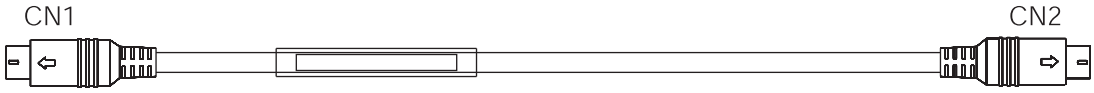

CB-CON-LB□□□

CN1

Color	Signal	No.
BR	SGA	1
YW	SGB	2
RD	5V	3
OR	ENBL	4
BL	EMGA	5
GN	24V	6
PL	GND	7
GY	EMGB	8
Shield	FG	

8PIN MIN DIN Connector (overmolded)

CN2

No.	Signal	Color
1	SGA	BR
2	SGB	YW
3	5V	RD
4	ENBL	OR
5	EMGA	BL
6	24V	GN
7	GND	PL
8	EMGB	GY
FG		Shield

8PIN MIN DIN Connector (overmolded)

3) Dummy plug (Accessories)
Connect a dummy plug to the teaching pendant connecting connector.
Make sure to connect a dummy plug if the AUTO mode is specified.
Without the connection, it will be the emergency stop condition.
Model : DP-4

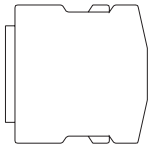

Plug : TX20A-26PH1-D2P1-D1E (JAE)

Signal	No.
GND	1
EMGS	2
VCC	3
DTR	4
EMGOUT2	5
EMGIN2	6
NC	7
RSVCC	8
EMGIN1	9
NC	10
NC	11
EMGOUT1	12
RTS	13
CTS (GND)	14
TXD	15
RXD	16
DSR	17
NC	18
NC	19
RSVTBX1	20
RSVTBX2	21
ENBVCC2	22
ENBTBX1	23
ENBVCC1	24
ENBTBX2	25
GND	26

Short-circuit processing.

10.4 When Connecting Power Supply with + Grounding

When using ERC3 with + grounding, there is a risk of short-circuit of 24V DC power supply if connected to the PC. This is because many PCs have the communication ground (GND) and the frame ground (FG) connected inside and short-circuit occurs through the frame ground.
Also, if controllers with different 24V DC power supplies are connected with serial communication, the communication line may become the route of controller power supply in some cases depending on the timing to turn on the power, resulting in the malfunction of the communication line.
Troubleshooting is summarized separately in [ME0271 Caution for + Grounding 24V Power Controller]. Please refer to it.

10.5 Example of Basic Positioning Sequence (PIO Patterns 0 to 3 in PIO Converter)

This section shows an example in which a simple operation box directs ERC3 to move the actuator successively to three positions on an axis.

10.5.1 I/O Assignment

"*" in codes above shows the signal of the active low. Input signal is processed with it is turned OFF and output signal is usually ON when the power is supplied and is OFF when signal output.

10.5.2 Ladder Sequence

[1] Servo ON (Emergency Stop) Circuit

1) It is presumed that the emergency stop release circuit installed in the operation box possesses the self-retaining circuit as shown in “3.1.3 [1] Emergency Stop Circuit”. When it comes to the emergency stop release condition, “Servo-on” signal from PLC to PCON turns ON.
2) Then if the emergency stop release state continues, the operation ready complete signal (sent from PCON to PLC) is turned on to go on the “Emergency stop release” lamp, which indicates that the actuator can be operated.

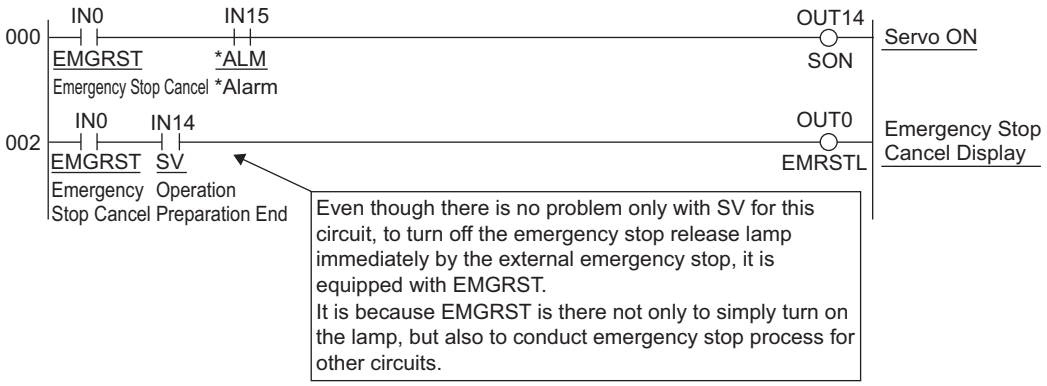

[2] Operation and Stop Circuit

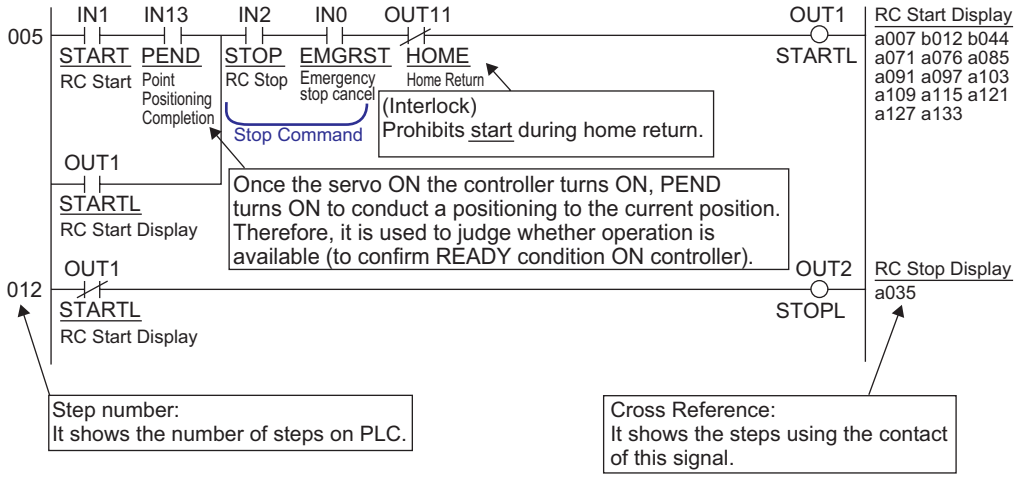

[3] Pause Circuit

Pause is provided by a single pushbutton. In a similar way as use of an alternate switch, push the button to make the actuator pause and push it again to release the pause of the actuator. Pushing the pushbutton leads the “pause command and pause lamp ON” state and pushing the pushbutton again brings “pause release command and pause lamp OFF”.

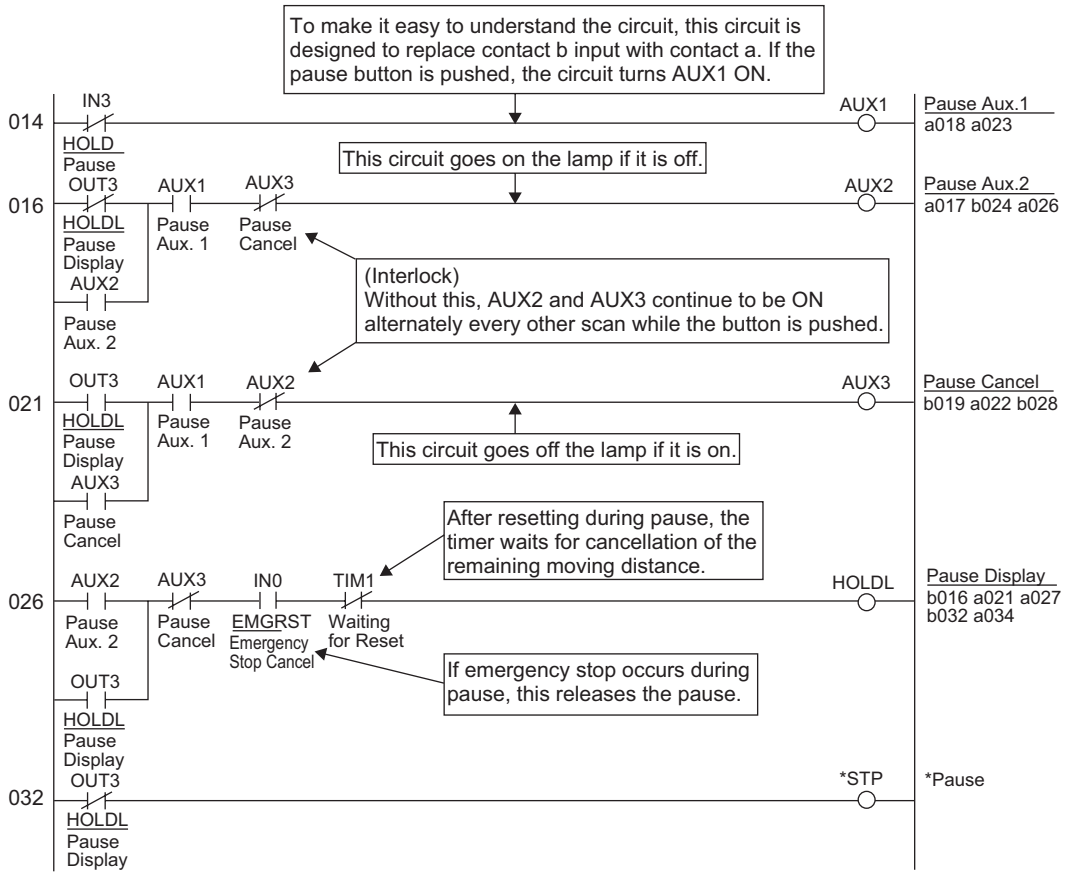

[4] Reset Circuit

If the “Stop” button on the operation box is pushed during pause, the “Reset” signal sent from PLC to ERC3 and PIO converter are turned ON and the remaining moving distance is cancelled. In addition, this operation releases the pause. (It is because the pause is not required with no remaining moving distance.)

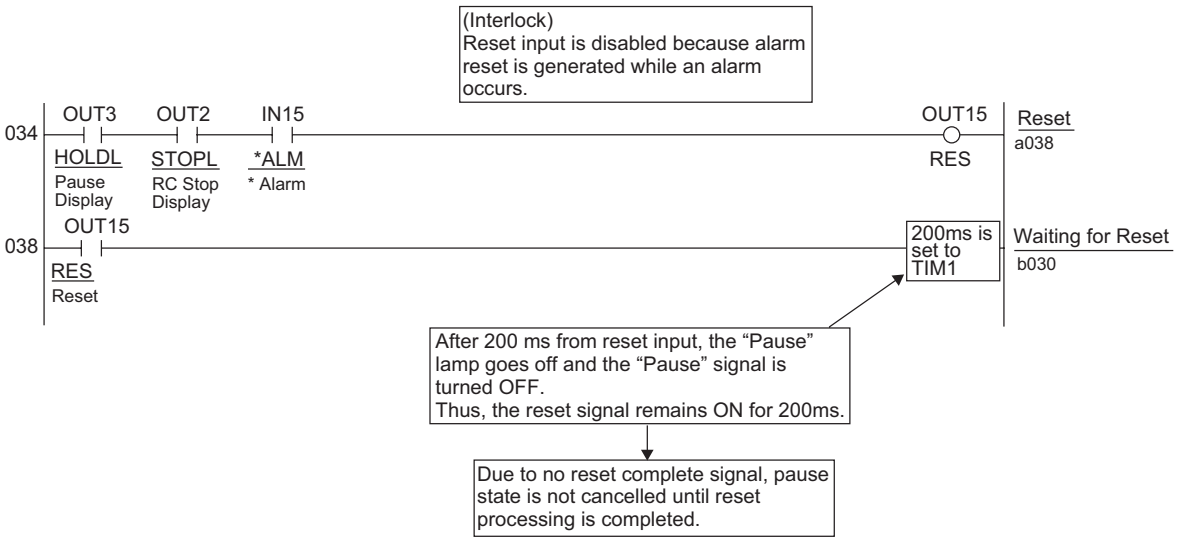

[5] Home Return Circuit

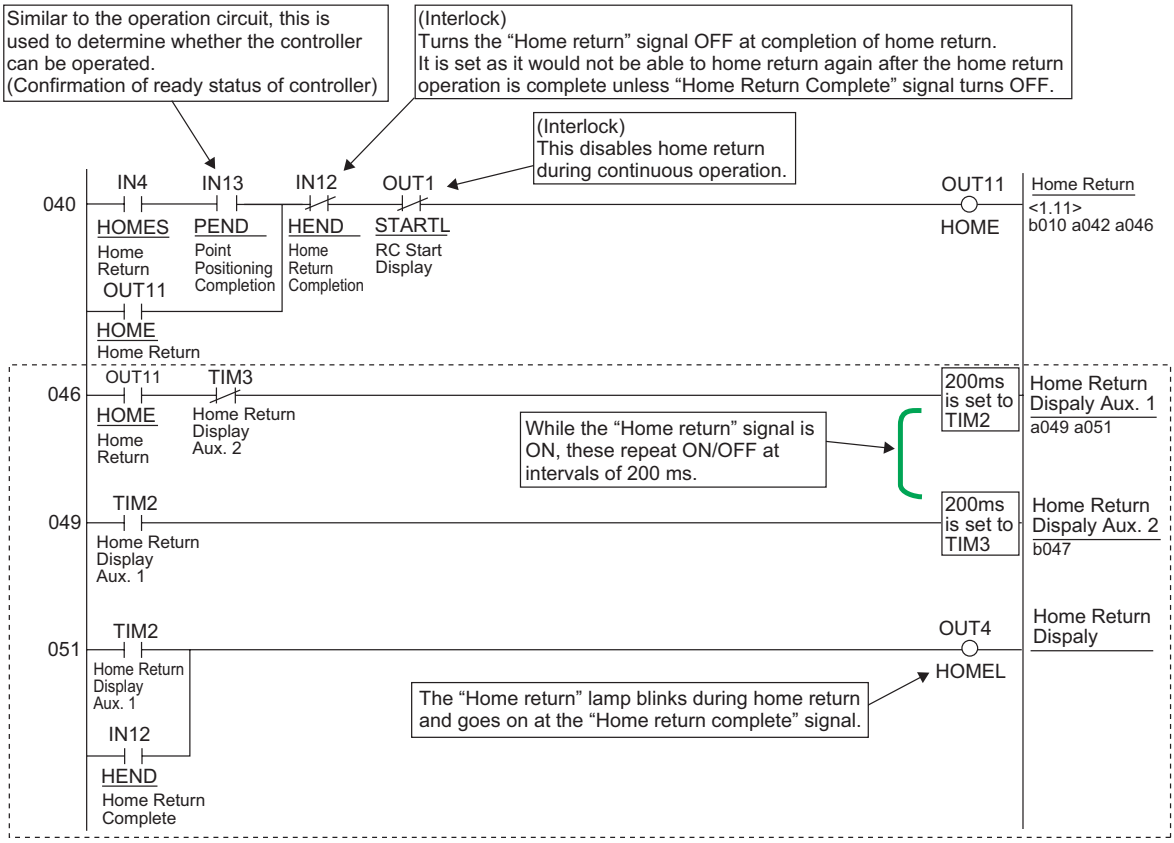

[6] Decode Circuit of Positioning Complete Position No.
The decode circuit converts the binary data of positioning complete position No. sent from ERC3 and PIO converter to PLC into the corresponding bit data.

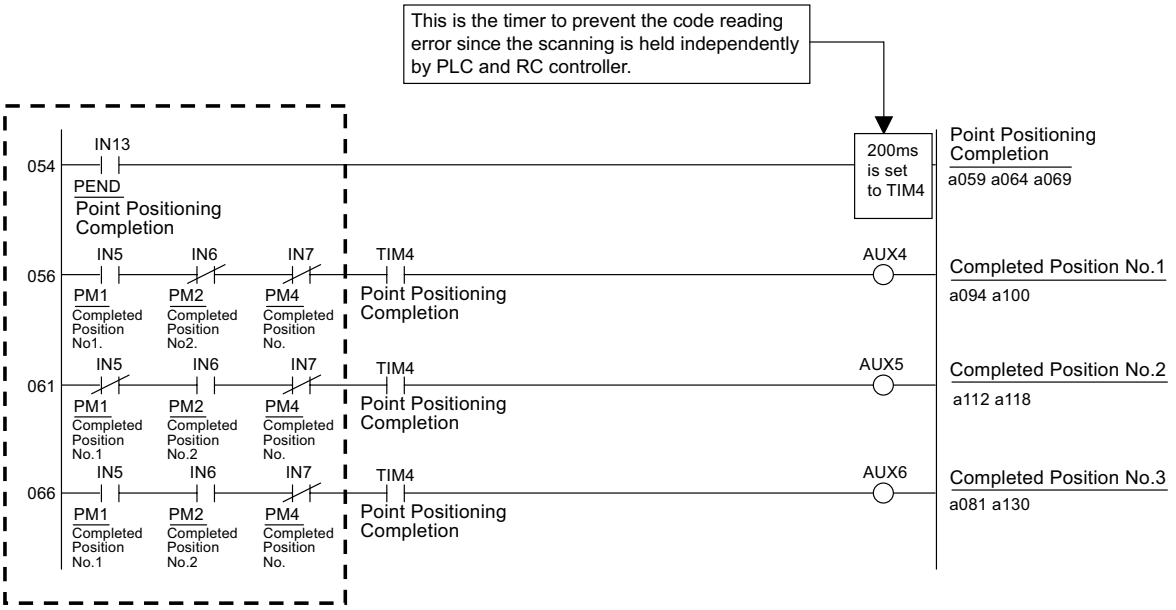

[7] Actuator Start Circuit
If the “Operation” switch on the operation box is pushed, the lamp of the “Operation” pushbutton switch described in (3) Operation and Stop Circuit goes on and, at the same time, the actuator starts successive positioning of position No. 1→2→3→1→2•••. The circuit below is intended for the activation.

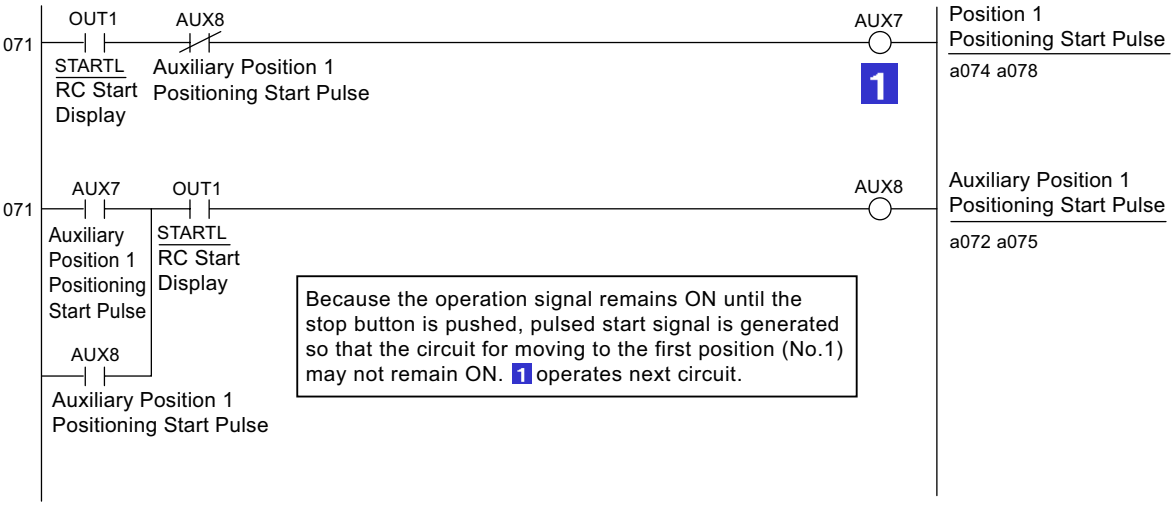

[8] Position 1 Operation Circuit

The main circuit is designed to process and manage signals “start” → “moving” → “positioning complete” to move the actuator to position No.1.

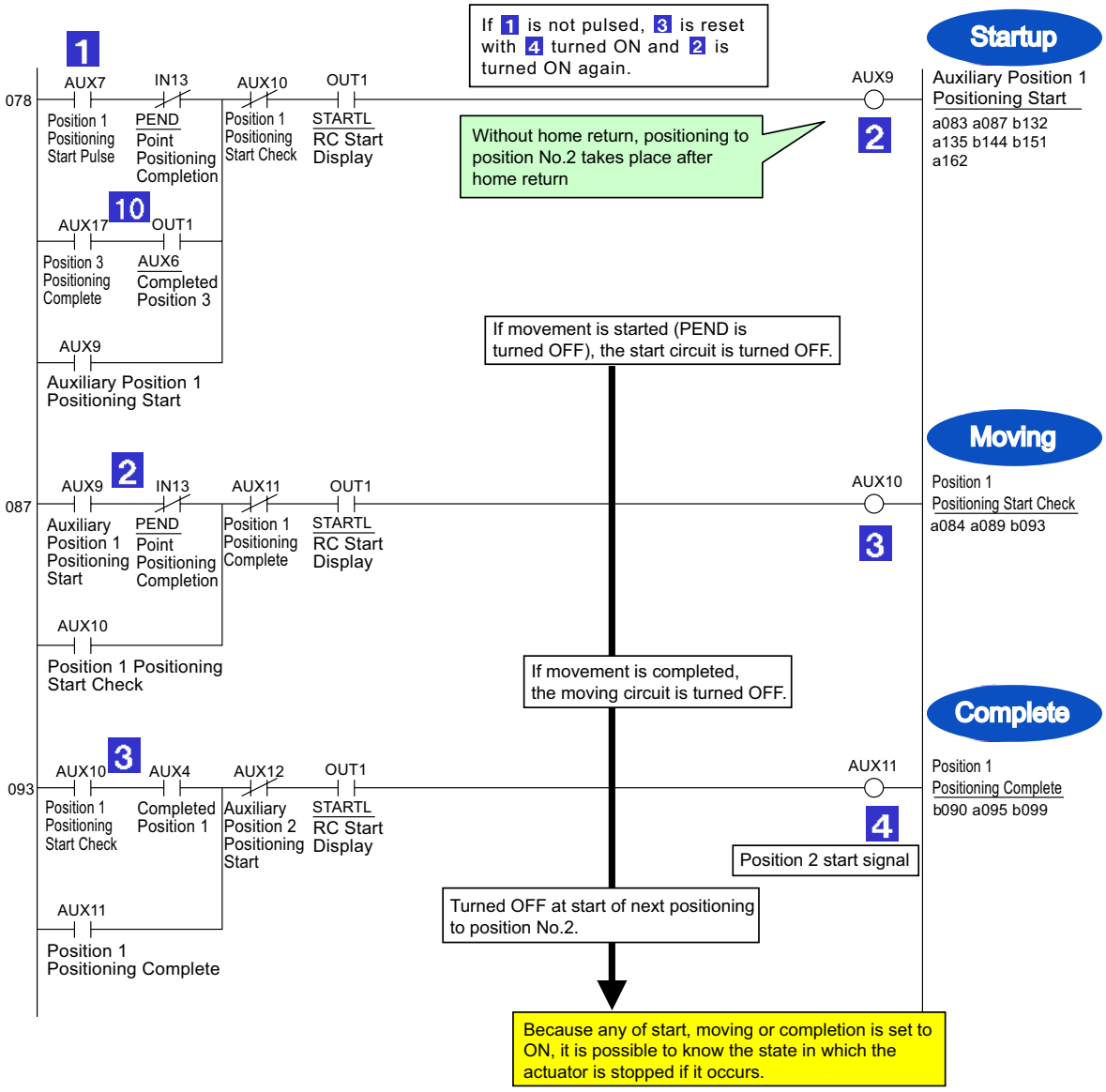

- Circuit 10 is designed to start positioning to position No.1 again after positioning to position No.3 is completed.
- If the “Operation” lamp goes off, the operation circuit is reset entirely. When the “Stop” button is pushed, the actuator will stop at completion of the operation being executed. At emergency stop, the actuator is stopped immediately (which is the function of ERC3 and PIO Converter).

[9] Position 2 Operation Circuit

The main circuit is designed to process and manage signals “start” → “moving” → “positioning complete” to move the actuator to position No.2. This circuit indicates the same sequence as that of position No.1.

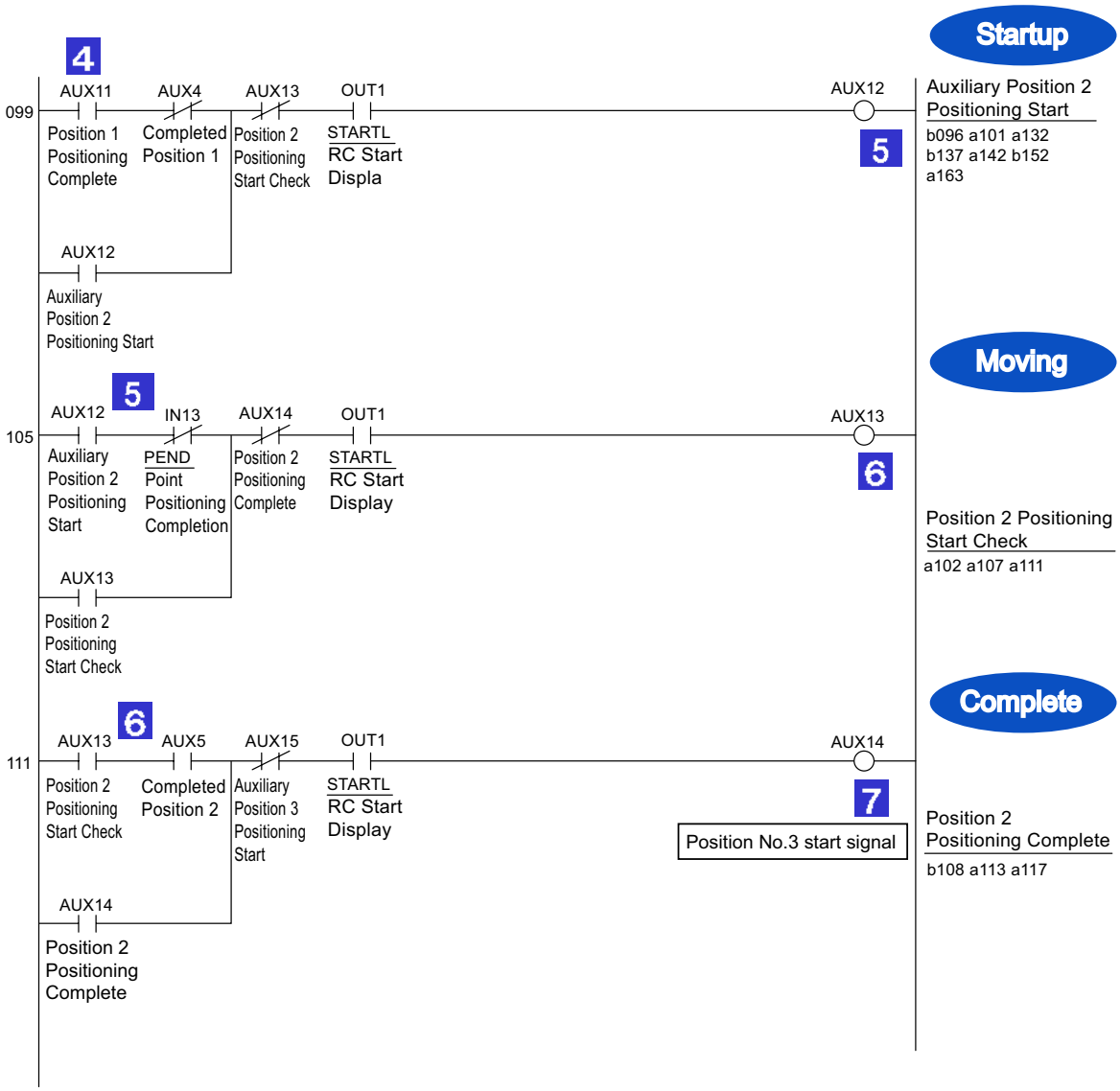

[10] Position 3 Operation Circuit

The main circuit is designed to process and manage signals “start” → “moving” → “positioning complete” to move the actuator to position No.3. This circuit indicates the same sequence as that of position No.1.

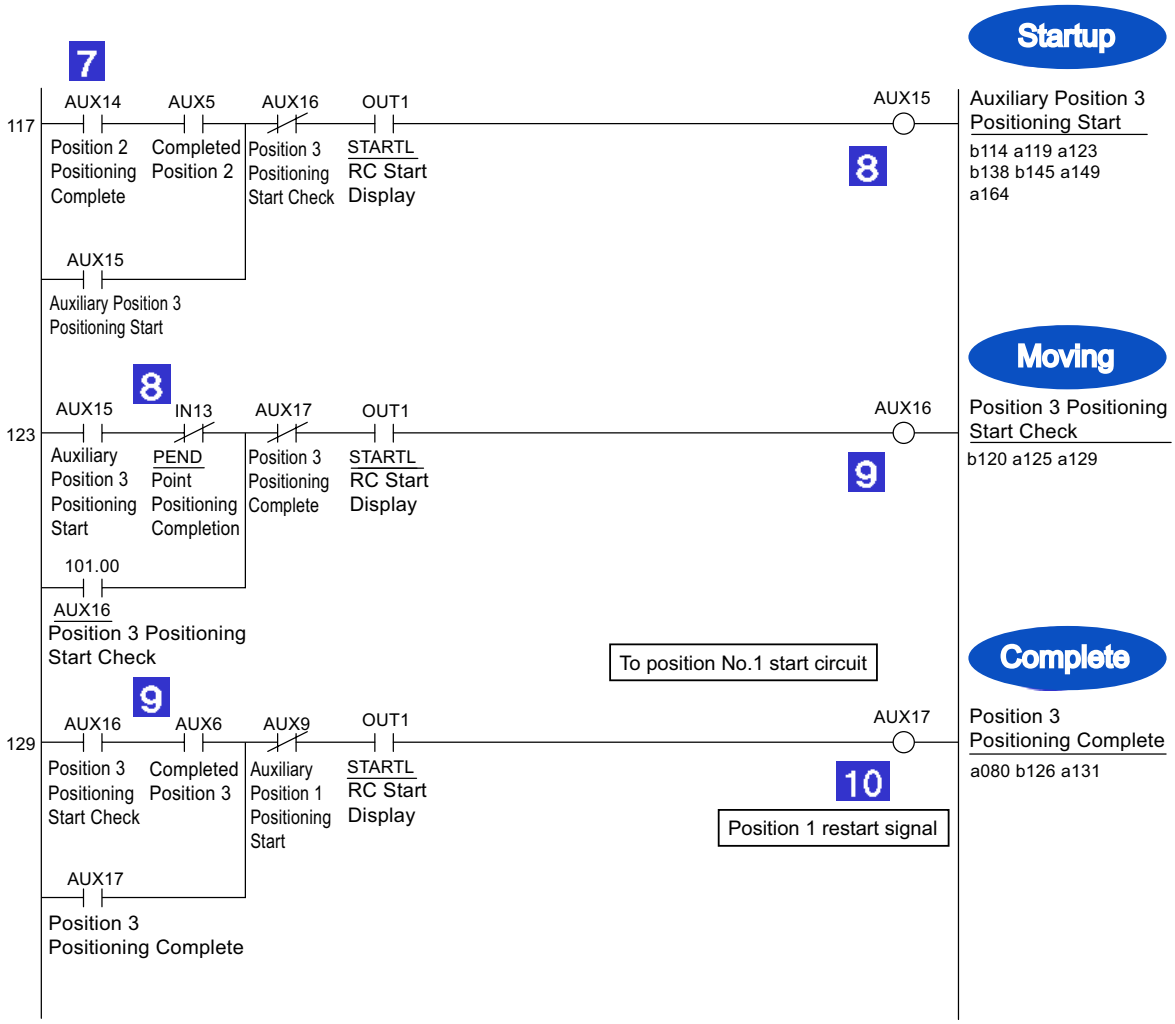

[11] Commanded Position No. Output Ready Circuit
The ready circuit is designed to hold start command and output commanded position No. in the binary code.
Interlock is taken so that position No. command may not be specified incorrectly.

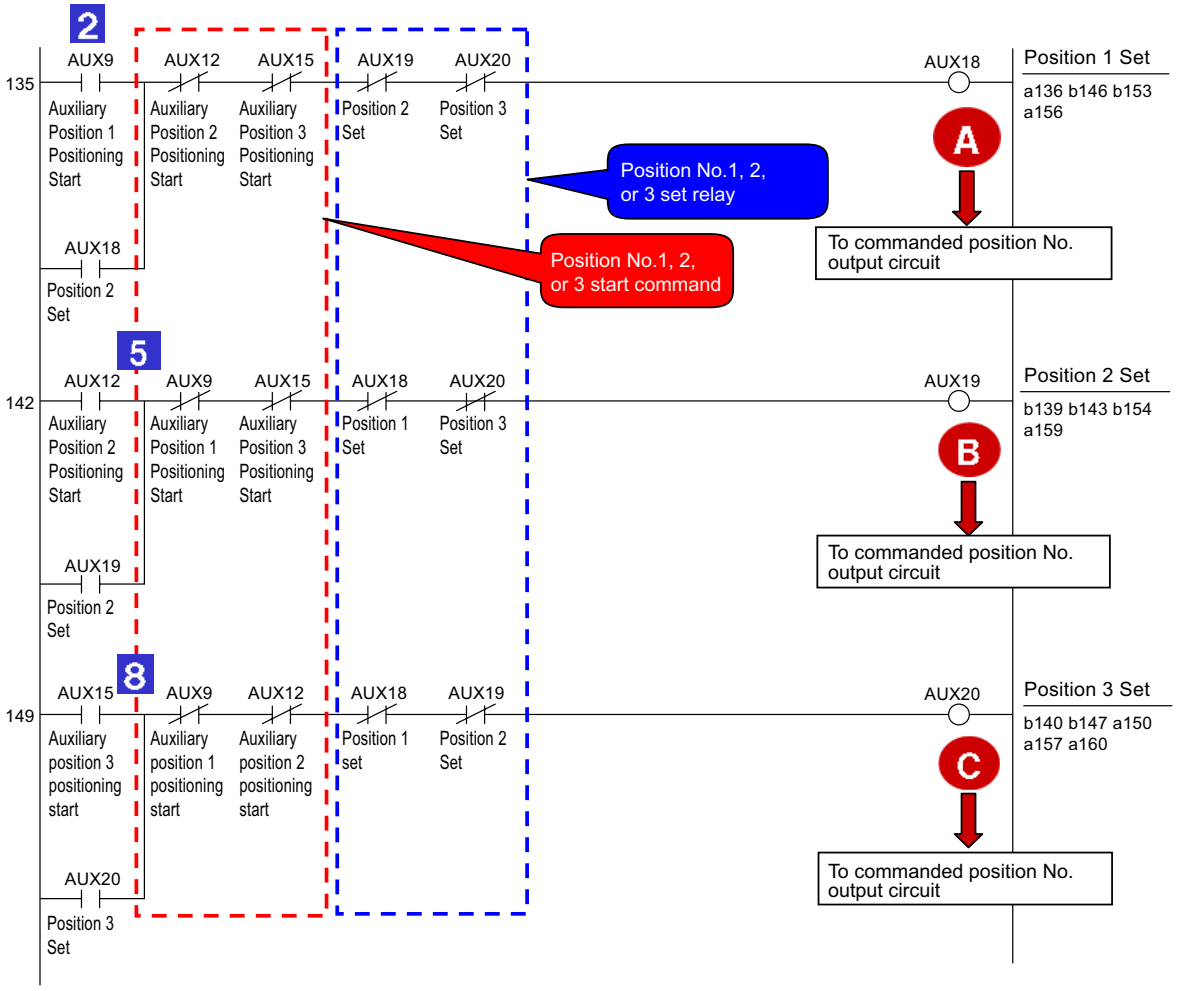

- Once a moving command to a position is issued, any of circuits A, B and C is turned ON to remember it unless a moving command to another position is issued. The operation circuit is cancelled by a stop command such as an emergency stop command. However, the circuit remembers the positions to which the actuator moved and the positions at which the actuator stopped until the cancellation. Such sequence design is also intended to cope with errors occurred and helpful to find the causes of the errors from circuit status, stop position inconsistency and other conditions.
- Taking interlock in both commands and results is usual means in circuit design to prevent results from being ON simultaneously. For example, if both SOLs in a solenoid valve of double SOL type are turned ON simultaneously, the coils are burned instantly. In another case, PLC executes a program in descending order but operations are not always done in the order. If you create a sequence program taking operation order into account, circuit change and/or addition due to debugging and specification change may cause the operation order to be modified without intention. Take interlock securely.

[12] Commanded Position No. Output Circuit
Depending on the result of the ready circuit, this circuit converts position No. to the binary code and outputs the data from PLC to ERC3 and PIO converter.

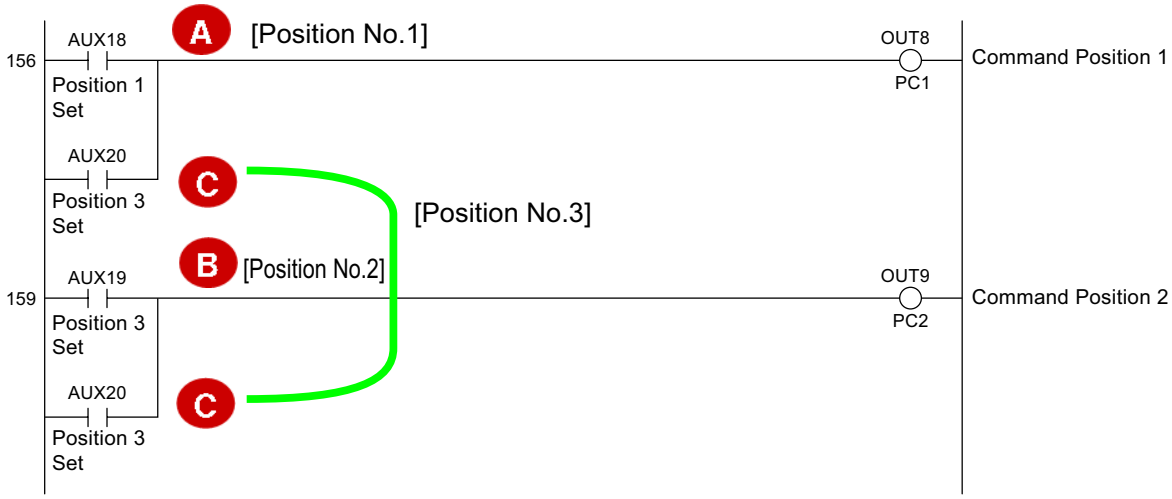

[13] Start Signal Output Circuit
After 20msec from the output of position No., this circuit outputs the start signal from PLC to ERC3 and PIO converter.

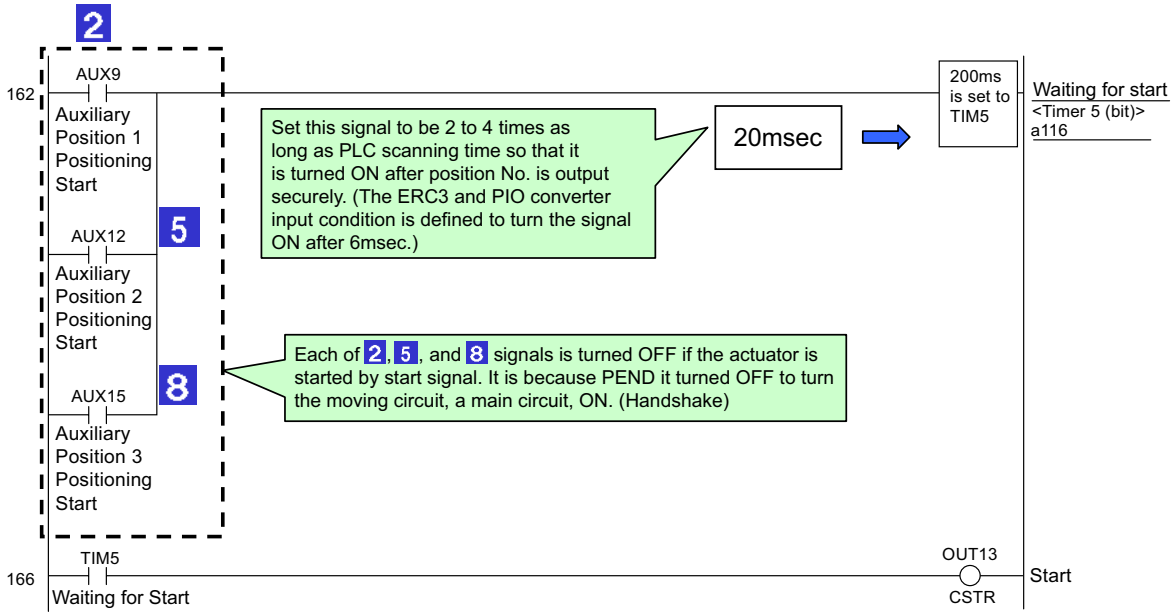

[14] Other Display Circuits (Zone 1, Position Zone, and Manual Mode)

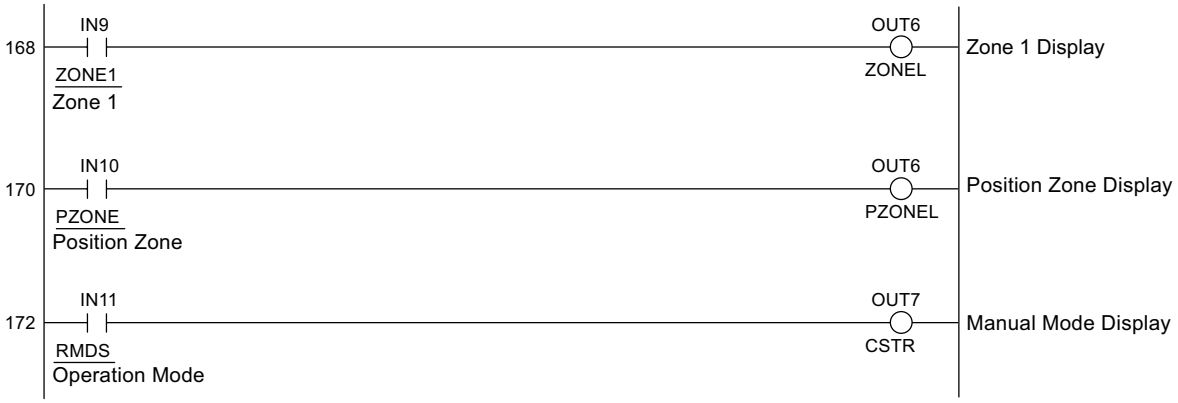

[Reference]
Programs and functions of PLC are expressed differently depending on manufacturers. However, the contents of sequence designs do not vary fundamentally. Though arithmetic and data processing commands seem differently, any manufacturer defines command words executing the same functions as those of other manufacturers.

10.6 Life

10.6.1 Product Life of Slider Type

The mechanical life of the actuator is represented by the greatest moment load on the guide.
The “rated load” is one factor that relates to the traveling life.
There are two types of “rated load,” namely “static rated load” and “dynamic rated load”.

- “Static rated load” : Load which, when applied to a stationary actuator, leaves a minor pressure mark on the contact surface.
- “Dynamic rated load” : Load which applies after a specified traveling distance under a load based on a specific probability of survival at which the guide does not break

Guide manufacturers indicate the life of a guide using a dynamic rated load when the probability of survival after 50km of traveling is 90%.
In the case of general industrial machinery, however, you should understand the specific life also for the purpose of maintenance. Also, the life of a guide has a sufficient allowance relative to a radial load, and receives the greatest impact by a moment load offset from the center of the guide.
The life is designed to ensure a traveling life of 5,000km under a load corresponding to the allowable load moment and at a load coefficient of 1.2 (safety factor).
[For the dynamic allowable load moment, refer to“1.2 Specifications]
The calculation formula for allowable load moment at a traveling life of 5,000km is shown below:

$$C_{IA} = \frac{M_{50}}{fw} \times \left(\frac{50km}{5000km}\right)^{\frac{1}{3}}$$

C_{IA} : Allowable load moment
f_W : Load coefficient (= 1.2)
M_{50} : Dynamic rated moment when the probability of survival after 50 km of traveling is 50%

The life at the actual moment is calculated by the formula below:

$$L = \left(\frac{C_{IA}}{P}\right)^3 \times 5000km$$

L : Traveling life (probability of survival: 90%)
C_{IA} : Allowable dynamic moment
P : Actual moment

10.6.2 Product Life of Rod Type

The product life is estimated as 5000km (reference) under the condition that it is operated with maximum transportable weight, maximum acceleration and deceleration.

Chapter 11 Warranty

11.1 Warranty Period

One of the following periods, whichever is shorter:
- 18 months after shipment from our factory
- 12 months after delivery to a specified location
- 2,500 operational hours

11.2 Scope of the Warranty

Our products are covered by warranty when all of the following conditions are met. Faulty products covered by warranty will be replaced or repaired free of charge:

(1) The breakdown or problem in question pertains to our product as delivered by us or our authorized dealer.
(2) The breakdown or problem in question occurred during the warranty period.
(3) The breakdown or problem in question occurred while the product was in use for an appropriate purpose under the conditions and environment of use specified in the operation manual and catalog.
(4) The breakdown or problem in question was caused by a specification defect or problem, or by the poor quality of our product.

Note that breakdowns due to any of the following reasons are excluded from the scope of warranty:
[1] Anything other than our product
[2] Modification or repair performed by a party other than us (unless we have approved such modification or repair)
[3] Anything that could not be easily predicted with the level of science and technology available at the time of shipment from our company
[4] A natural disaster, man-made disaster, incident or accident for which we are not liable
[5] Natural fading of paint or other symptoms of aging
[6] Wear, depletion or other expected result of use
[7] Operation noise, vibration or other subjective sensation not affecting function or maintenance

Note that the warranty only covers our product as delivered and that any secondary loss arising from a breakdown of our product is excluded from the scope of warranty.

11.3 Honoring the Warranty

As a rule, the product must be brought to us for repair under warranty.

11.4 Limited Liability

(1) We shall assume no liability for any special damage, consequential loss or passive loss such as a loss of expected profit arising from or in connection with our product.
(2) We shall not be liable for any program or control method created by the customer to operate our product or for the result of such program or control method.

11.5 Conditions of Conformance with Applicable Standards/Regulations, Etc., and Applications

(1) If our product is combined with another product or any system, device, etc., used by the customer, the customer must first check the applicable standards, regulations and/or rules. The customer is also responsible for confirming that such combination with our product conforms to the applicable standards, etc. In such a case we will not be liable for the conformance of our product with the applicable standards, etc.

(2) Our product is for general industrial use. It is not intended or designed for the applications specified below, which require a high level of safety. Accordingly, as a rule our product cannot be used in these applications. Contact us if you must use our product for any of these applications:

[1] Medical equipment pertaining to maintenance or management of human life or health
[2] A mechanism or mechanical equipment intended to move or transport people (such as a vehicle, railway facility or aviation facility)
[3] Important safety parts of mechanical equipment (such as safety devices)
[4] Equipment used to handle cultural assets, art or other irreplaceable items

(3) Contact us at the earliest opportunity if our product is to be used in any condition or environment that differs from what is specified in the catalog or operation manual.

11.6 Other Items Excluded from Warranty

The price of the product delivered to you does not include expenses associated with programming, the dispatch of engineers, etc. Accordingly, a separate fee will be charged in the following cases even during the warranty period:

[1] Guidance for installation/adjustment and witnessing of test operation
[2] Maintenance and inspection
[3] Technical guidance and education on operating/wiring methods, etc.
[4] Technical guidance and education on programming and other items related to programs

Change History

Revision Date	Revision Description
2011.09	First Edition
2011.10	Second Edition Pg. 278, 303 and 304 Parameter for MEC Mode added
2011.11	Third edition Pg. 21, 109 and 141 Maximum load current 4.2A when high output setting added Pg. 37 Change the lost motion of Rod type lead 20 and 24. 0.1mm or less → 0.2mm or less Pg. 46 Horizontally oriented wall mount for the slider types SA5C and SA7C × → ○ However, a note added to warn that it is easy for a foreign object to get inside from the opening. Pg. 192 Correction the chart of the electromagnetic valve type. Pressing (tension) × → ○ Pitch Feeding (relative moving feed) × → ○
2012.02	Fourth edition Pg. 117, 118, 162, 163, 164, 176, 177, 179, 181, 183 and 188 Wire color of No.84 corrected from BL to YW
2012.03	Fifth edition Pg. 47 Note added to tell platform should have a structure with enough stiffness Pg. 47, 48, 49, 52, 53 and 54 Note changed to 1.8 times more of the nominal diameter for the length of thread engagement on aluminum Pg. 159 Note “Connect the contact of a conductor to cable between MP+ and MP- terminals” deleted Pg. 172, 287 Setting table of PIO pattern for pulse train control mode added Pg. 255 Explanation of DCLR added
2012.04	Sixth edition Pg. 62, 63, 117, 118, 162, to 164, 177, 178, 180, 182, 184 and 188 Pin numbers in cable diagram changed to 1, 2, 3 to 13 from top Pg. 74 to 77 Weight added to appearance drawing Pg. 160 and 161 Contact CR load current changed Pg. 203 Instruction added for home return operation in PIO Pattern 2 of ERC3 main unit Pg. 353 IN13 b contact ⫽ changed to a contact || Pg. 354 AUX4 b contact ⫽ changed to a contact ||

Revision Date	Revision Description
2012.06	Seventh edition Revised overall
2012.06	Edition 7B Note corrected
2012.10	Eighth edition Pg. 125, 126, 128, 132, 133, 137 *STP is deleted. Pg. 423 “2,500 operational hours” added to Warranty Period.

Manual No.: ME0297-8A (October 2012)

IAI
Quality and Innovation

IAI Corporation

Head Office: 577-1 Obane Shimizu-KU Shizuoka City Shizuoka 424-0103, Japan
TEL +81-54-364-5105 FAX +81-54-364-2589
website: www.iai-robot.co.jp/

Technical Support available in USA, Europe and China

IAI America, Inc.

Head Office: 2690 W. 237th Street, Torrance, CA 90505
TEL (310) 891-6015 FAX (310) 891-0815
Chicago Office: 1261 Hamilton Parkway, Itasca, IL 60143
TEL (630) 467-9900 FAX (630) 467-9912
Atlanta Office: 1220 Kennestone Circle, Suite 108, Marietta, GA 30066
TEL (678) 354-9470 FAX (678) 354-9471
website: www.intelligentactuator.com

IAI Industrieroboter GmbH

Ober der Röth 4, D-65824 Schwalbach am Taunus, Germany
TEL 06196-88950 FAX 06196-889524

IAI (Shanghai) Co., Ltd.

SHANGHAI JIAHUA BUSINESS CENTER A8-303, 808, Hongqiao Rd. Shanghai 200030, China
TEL 021-6448-4753 FAX 021-6448-3992
website: www.iai-robot.com

The information contained in this document is subject to change without notice for purposes of product improvement.
Copyright © 2012. Oct. IAI Corporation. All rights reserved.

12.10.000