# ELD3-EC Series DC Servo Drive

## User Manual

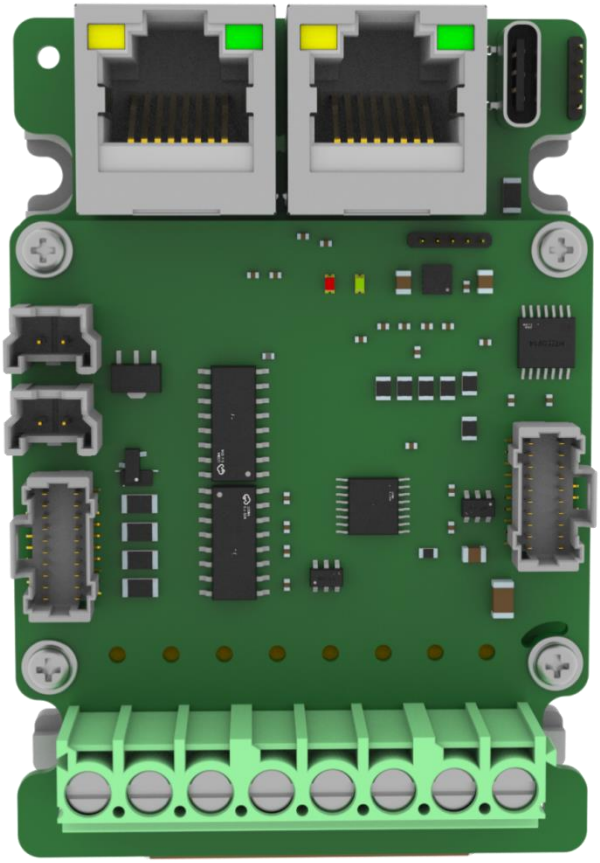

# Foreword

**Thank you for purchasing Leadshine ELD3-EC series DC Servo drives. This manual will provide information on the ELD3-EC series servo products regarding product safety & specifications, installations & wiring, tuning & problem diagnostics.**

***Please contact us at tech@leadshine.com if you need further technical support.***

| |
|---|
| Incorrect operation may cause unexpected accident, please read this manual carefully before using product. |

- ✧ We reserve the right to modify equipment and documentation without prior notice.
- ✧ We won't undertake any responsibility with any customer's modification of product and the warranty of product will be canceled at the same time.

## Safety Precautions

Please read the safety instructions carefully before using the products and pay attention to the safety signs.

| | |
|---|---|
| Danger | Might incur death or serious injury |
| Caution | Might cause injury to operating personals or damage to equipment |
| Warning | Might cause damage to equipment |
| | High voltage. Might cause electrocution to personals in contact |
| | Hot surface. Do not touch |
| | Protective Earth |

## Safety instructions

**Warning**

- ✓ The design of the product is not to be used in mechanical system which may incur health hazard.
- ✓ Users should be aware of the product safety precautions during design and installations of the equipment to prevent any unwanted accident.

## Upon receiving

**Caution**

- ✓ The use of damaged or faulty product(s) is prohibited.
- ✓ Please refer to item checklist. If the labels don't match, please do not install.

## Transportation

### Caution

- ✓ Please provide storage and transportation under protected conditions.
- ✓ Do not stack the products too high up to prevent toppling.
- ✓ The product should be packaged properly during transportation,
- ✓ Do not hold the product by the cable, motor shaft or encoder while transporting it.
- ✓ The product should be protected from external forces and shock.

## Installation

### Caution

***Servo drive and Motor:***

- ✓ Do not install around combustibles to prevent fire hazard.
- ✓ Avoid vibration and impact.
- ✓ Do not install products that are damaged or incomplete.

***Servo drive:***

- ✓ Please install in electrical cabinet with sufficient protection from outside elements.
- ✓ Reserve sufficient gap as per the installation guide.
- ✓ Make sure to have good heat sinking.
- ✓ Avoid dust, corrosive gas, conductive object or fluid and combustibles.

***Servo Motor:***

- ✓ Make sure installation is tight to prevent it from loosening.
- ✓ Prevent fluid from leaking into motor and encoder.
- ✓ Protect motor from impact to avoid damaging encoder.
- ✓ Motor shaft should not bear the load beyond the limits as specified.

## Wiring

### Warning

- ✓ Participate installation personals should have sufficient training in product installation safety.
- ✓ Please power off and wait for 10 minutes to make sure a full discharge of electricity.
- ✓ Servo drive and motor must be connected to ground.
- ✓ Connect the cables only after servo drive motor installed correctly
- ✓ Make sure the wires are properly managed and insulation layer is not torn to prevent electrocution.

### Caution

- ✓ Wiring must be correctly connected to prevent damage to product(s)
- ✓ Servo motor U, V, W terminal should be connected correctly and NOT connected directly to an AC power supply.
- ✓ Capacitor, inductor or filter shouldn't be installed between servo motor and servo drive.
- ✓ Connecting wires or any non-heat resistant components should be put near to heat sink of the servo drive or motor.
- ✓ The flyback diode which is connected in parallel to output signal DC relay must not be connected in reverse.

## Tuning and running

### Caution

- ✓ Make sure the wirings of servo drive and servo motor are installed and fixed properly before powering on.
- ✓ On the first time tuning of the product, it is recommended to run unloaded until all the parameter settings are confirmed to prevent any damage to the product or machine.

## Usage

### Caution

- ✓ Please install an emergency stop button on machine to stop operation immediately if there is an accident.
- ✓ Please make sure machine is stopped before clearing an alarm.
- ✓ Servo drive must be matched with specified motor.
- ✓ Frequent restart of the servo system might incur damage to the product.
- ✓ Servo drive and motor will be hot to touch shortly after power off. Please be careful.
- ✓ Modification(s) to servo system is prohibited.

## Error Handling

### Warning

- ✓ Please wait for 5 minutes after powering off for the electricity to be fully discharged before uninstalling the cables.
- ✓ Participate maintenance personals should have sufficient training in maintenance and operation of this product series.

### Caution

- ✓ Please handle the error before clearing an alarm.
- ✓ Keep away from machine after a restart upon alarm. Mechanical axis might suddenly move. Such hazard should be prevented during the utilization of the product.

## Model Selection

### Caution

- ✓ Rated torque of the servo motor should be higher than continuous designated torque when fully loaded.
- ✓ Load inertia ratio of the motor should be lower or equals to recommended value for specified models
- ✓ Servo drive must be matched with specified motor.

# Warranty Information

## Available for

Leadshine overseas warranty only covers Leadshine DC servo products that are obtained through **Leadshine certified sales channel outside of China**.

## Warranty claim

All Leadshine DC servo products (Servo drives and motors) overseas enjoy **18-month** warranty period.

Due to unforeseen circumstances in different sales regions around the globe, we recommend users to seek technical support from directed sales channel as any warranty claim or repair services may be required.

- Please be informed that any maintenance/repair work that is outside of the warranty claim conditions might incur some charges and to be confirmed before product(s) is being sent in.
- The duration required for maintenance work to be done is to be confirmed after initial check-up but we reserve the right to prolong the repair duration if needed.
- Discontinued products within warranty period will be replaced with a product of similar specifications.

## Steps to warranty claim

1. Visit Leadshine global site www.leadshine.com to look for local certified sales channel.
2. Contact designated sales channel to check if any fee might incur. May include repair fee, spare part cost or shipping cost.

## Circumstances where warranty claim is not available

- Damage/Loss due to occurrence of natural or man-made disaster such as fire, flood or earthquake.
- Installation or wiring error
- If there is any modification done to the product
- Warranty label on products is torn or not existing
- Not a product bought from Leadshine certified global network of retailers/distributors.

## Before warranty claim

- Please backup device parameters before any repair work/warranty claim. Leadshine and Leadshine certified retailers/distributors will not be held responsibilities for any data loss.
- If available, please send product back in original packaging or make sure it is well packaged to prevent any damage to the product during shipping.

*Leadshine Technology Co.,Ltd. and its certified sales channel reserved the final right of the interpretation of the warranty information.*

# TABLE OF CONTENTS

**WARRANTY INFORMATION** ..... **5**

**CHAPTER 1 INTRODUCTION** ..... **10**

1.1 PRODUCT INTRODUCTION ..... 10
1.2 MODEL NUMBER STRUCTURE ..... 11
*1.2.1 Servo Drive ..... 11*
1.3 SERVO DRIVE TECHNICAL SPECIFICATIONS ..... 12
1.4 SERVO DRIVE PORTS AND CONNECTORS ..... 14
1.5 MOTOR PORTS AND CONNECTORS ..... 16

**CHAPTER 2 INSTALLATION & WIRING** ..... **17**

2.1 SERVO DRIVE INSTALLATION ..... 17
*2.1.1 Servo drive installation environment ..... 17*
*2.1.2 Servo drive dimension ..... 17*
2.2 SERVO MOTOR INSTALLATION ..... 18
*2.2.1 Installation conditions ..... 18*
*2.2.2 Precautions during installation ..... 18*
2.3 ELD3-EC WIRING DIAGRAM ..... 20
2.4 SERVO DRIVE PORTS ..... 22
2.5 MAIN/MOTOR POWER SUPPLY CN5 ..... 23
2.6 LOGIC POWER INPUT CN8 ..... 23
2.7 BRAKE OUTPUT PORT CN9 ..... 24
*2.7.1 Holding brake wiring diagram ..... 24*
2.8 I/O AND STO SIGNAL PORT CN2 ..... 26
2.9 ETHERCAT COMMUNICATION PORT CN3/CN4 ..... 29
2.10 ENCODER (MOTOR AND 2ND ENCODER) CN1 ..... 29
2.11 USB TYPE-C TUNING PORT ..... 31
2.12 CABLE SELECTION ..... 32
*2.12.1 Motor Power Cable ..... 32*
*2.12.2 Motor Encoder Cable ..... 33*
*2.12.3 Motor Brake Cable/Logic Power Cable ..... 33*
2.13 REGENERATIVE RESISTOR SELECTION AND CONNECTIONS ..... 34
2.14 I/O SIGNAL ..... 38
*2.14.1 Analog input signal ..... 38*
*2.14.2 Common digital input ..... 38*
*2.14.3 Common digital output ..... 40*
*2.14.4 Probe input ..... 40*
*2.14.5 Digital Input Signal Settings ..... 40*
*2.14.6 Digital Output Signal Settings ..... 42*
2.15 MEASURES AGAINST ELECTROMAGNETIC INTERFERENCE ..... 44
*2.15.1 Grounding connection and other anti-interference wiring connections ..... 44*
*2.15.2 Using line filter ..... 45*

**CHAPTER 3 PARAMETER** ..... **46**

3.1 PARAMETER LIST ..... 46
*3.1.1 Servo drive parameter ..... 46*
*3.1.2 Manufacturer parameter ..... 53*
*3.1.3 Motion parameter starting with object dictionary 6000 ..... 55*
3.2 PARAMETER FUNCTION ..... 58
*3.2.1 【Class 0】Basic Settings ..... 58*
*3.2.2 【Class 1】Gain Adjustments ..... 67*
*3.2.3 【Class 2】Vibration Suppression ..... 74*
*3.2.4 【Class 3】Velocity Control ..... 80*
*3.2.5 【Class 4】I/O Interface Setting ..... 82*

*3.2.6【Class 5】Extension settings* ..... *88*
*3.2.7【Class 6】Other settings* ..... *93*
*3.2.8【Class 7】Factory settings* ..... *98*
*3.2.9【Class C】Position Comparison* ..... *99*
3.3 402 PARAMETERS FUNCTION ..... 102

**CHAPTER 4 SERVO DRIVE OPERATION ..... 120**

4.1 GET STARTED WITH DRIVER OPERATION ..... 120
*4.1.1 Checklist before operation* ..... *120*
*4.1.2 Power On* ..... *120*
*4.1.3 Trial Run* ..... *120*
*4.1.4 Motor rotational direction settings* ..... *121*
*4.1.5 Holding Brake Settings* ..... *121*
*4.1.6 Servo Running* ..... *122*
*4.1.7 Servo stop* ..... *124*
4.2 ELECTRONIC GEAR RATIO ..... 132

**CHAPTER 5 CONTROL MODE ..... 134**

5.1 ELD3-EC MOTION CONTROL STEP-BY-STEP ..... 134
5.2 CIA402 STATE MACHINE ..... 135
5.3 DRIVER CONTROL MODE SETTING ..... 137
*5.3.1 Supported control mode (6502h)* ..... *137*
*5.3.2 Operational mode setting (6060h) and Operational mode display (6061h)* ..... *137*
5.4 COMMON FUNCTIONS FOR ALL MODES ..... 138
*5.4.1 Digital input setting and status display* ..... *138*
*5.4.2 Digital output setting and control operation method* ..... *138*
*5.4.3 Motor Rotational Direction* ..... *138*
*5.4.4 Stop Settings* ..... *139*
*5.4.5 Position mode – Electronic Gear* ..... *139*
*5.4.6 Position Limits* ..... *140*
*5.4.7 Control Word* ..... *141*
*5.4.8 Status Word* ..... *142*
*5.4.9 Synchronous cycle time setting* ..... *143*
*5.4.10 Driver Enabling* ..... *143*
5.5 POSITION MODE（CSP、PP、HM） ..... 144
*5.5.1 Common Functions of Position Mode* ..... *144*
*5.5.2 Cyclic Synchronous Position Mode (CSP)* ..... *145*
*5.5.3 Protocol Position Mode (PP)* ..... *146*
*5.5.4 Homing mode (HM)* ..... *150*
5.6 VELOCITY CONTROL MODE（CSV、PV） ..... 174
*5.6.1 Common Functions of Velocity Control* ..... *174*
*5.6.2 Cyclic Synchronous Velocity Mode (CSV)* ..... *175*
*5.6.3 Profile Velocity Mode (PV)* ..... *176*
5.7 TORQUE MODE（CST、PT） ..... 178
*5.7.1 Common Functions of Torque Mode* ..... *178*
*5.7.2 Cyclic Synchronous Torque Mode (CST)* ..... *179*
*5.7.3 Profile Torque Mode (PT)* ..... *180*

**CHAPTER 6 APPLICATION ..... 182**

6.1 GAIN ADJUSTMENT ..... 182
6.2 INERTIA RATIO IDENTIFICATION ..... 184
*6.2.1 Online inertia determination* ..... *185*
6.3 EASY TUNING ..... 186
*6.3.1 Single Parameter Tuning* ..... *186*
*6.3.2 One-click Tuning* ..... *187*
6.4 AUTO GAIN ADJUSTMENT ..... 189

6.5 MANUAL GAIN ADJUSTMENT ..... 194
6.6 PARAMETERS ADJUSTMENT UNDER DIFFERENT CONTROL MODES ..... 196
6.7 GAIN SWITCHING ..... 197
6.7 3RD GAIN SWITCHING ..... 203
6.8 FEEDFORWARD GAIN ..... 204
*6.8.1 Velocity feedforward ..... 204*
*6.8.2 Torque feedforward ..... 205*
6.9 MODEL FOLLOWING CONTROL ..... 207
6.10 ZERO TRACKING CONTROL ..... 208
6.11 FRICTION COMPENSATION FUNCTION ..... 210
6.12 VIBRATION SUPPRESSION ..... 211
*6.12.1 Mechanical resonance suppression ..... 211*
*6.12.2 End vibration suppression ..... 213*
*6.12.3 Mechanical properties analysis ..... 214*
6.13 POSITION COMPARISON ..... 214
6.14 BLACK BOX ..... 219
6.15 FULL CLOSED LOOP CONTROL ..... 222
6.16 MULTITURN ABSOLUTE ENCODER ..... 224
*6.16.1 Parameters setting ..... 224*
*6.16.2 Read absolute position ..... 224*
*6.16.3 Absolute Encoder Related Alarm ..... 229*
*6.16.6 Battery kit ..... 229*
6.17 PROBE ..... 230
*6.17.1 Probe function ..... 231*
*6.17.2 Signal Input of EXT1 and EXT2 ..... 232*
*6.17.3 Probe Control Word 60B8h ..... 232*
*6.17.4 Probe Status Word 60B9h ..... 233*
*6.17.6 Latch Position Register ..... 233*
*6.17.7 Latch Counter Register ..... 233*
*6.17.8 Probe mode ..... 233*
6.18 SAFETY FUNCTIONS ..... 235
*6.18.1 External brake deactivation output signal BRK-OFF ..... 235*
*6.18.2 Emergency stop function ..... 237*
6.19 OTHER FUNCTIONS ..... 238
*6.19.1 Functions under Position mode ..... 238*
*6.19.2 Functions under velocity mode ..... 242*
*6.19.3 Functions under torque mode ..... 244*

**CHAPTER 7 ETHERCAT COMMUNICATION ..... 245**

7.1 ETHERCAT PRINCIPLE FUNCTION ..... 245
7.2 SYNCHRONOUS MODE ..... 246
*7.2.1 Free Running Mode ..... 246*
*7.2.2 Distributed clock synchronization mode ..... 246*
7.3 ETHERCAT STATE MACHINE ..... 247
7.4 CANOPEN OVER ETHERCAT (COE) ..... 248
*7.4.1 Network structure of ELD3-EC ..... 248*
*7.4.2 Object dictionary ..... 249*
*7.4.3 Service Data Object (SDO) ..... 249*
*7.4.4 Process Data Object (PDO) ..... 249*
7.5 NETWORK STATUS DISPLAY ..... 252

**CHAPTER 8 WARNING AND ALARM ..... 253**

8.1 SERVO DRIVE WARNING..... 253
8.2 SERVO DRIVE ALARM ..... 253
8.3 ALARM HANDLING..... 261
8.4 ALARM CLEARING ..... 276
*8.4.1 Servo Drive Alarm..... 276*
8.5 ETHERCAT COMMUNICATION ALARM ..... 276

**CONTACT US ..... 288**

# Chapter 1 Introduction

## 1.1 Product Introduction

ELD3-EC Series DC Servo Product is a whole new high-end DC servo drivers and motors product range that we have proudly developed at Leadshine Technology Co.,Ltd. This product series provides more in demand functionalities with better performance and safety assurance. Applicable in most high end usages.

ELD3 Series Mini DC Servo Drive is the latest DC servo drive launched to an ever progressively improving Leadshine DC servo drive product lines. A whole new line of servo products featuring compact full functional smaller drive than the size of the palm with power ratings ranging from 50W up to 750W.

Our ELD3 Series supports EtherCAT communication protocol with many others to be released soon. The series come with Safe Torque Off SIL3, Logic Power Circuit, Brake Output, Full Closed Loop Control among many other servo functions that are not available on previous generation drives.

## 1.2 Model Number Structure

### 1.2.1 Servo Drive

| ELD3 | - | EC | 7005 | B | M | - | M |
|---|---|---|---|---|---|---|---|
| Ⅰ | | Ⅱ | Ⅲ | Ⅳ | Ⅴ | | Ⅵ |

| No. | Description | |
|---|---|---|
| Ⅰ | Series No. | ELD3：ELD3 Series DC Servo Drive |
| Ⅱ | Communication protocol | EC：EtherCAT |
| Ⅲ | Power Rating | 7001: max. 70VDC, 1Arms<br>7005: max. 70VDC, 5Arms<br>7010: max. 70VDC, 10Arms<br>7020: max. 70VDC, 20Arms |
| Ⅳ | Brake | B: With Brake Output<br>Blank: Without brake output |
| Ⅴ | Type | M: Without housing<br>H: With housing |
| Ⅵ | Customized | M: Communication Molex Port<br>Blank: Communication RJ45 Port<br>XX:Customized |

# 1.3 Servo Drive Technical Specifications

| ELD3-EC Series | ELD3-EC7001 | ELD3-EC7005 | ELD3-EC7010 | ELD3-EC7020 |
|---|---|---|---|---|
| **Power Rating** | 50W | 200W | 400W | 750W |
| **Rated Current (A)** | 1 | 5 | 10 | 20 |
| **Peak Current (A)** | 2.5 | 12.5 | 25 | 50 |
| **Logic Power Circuit** | 24VDC | | | |
| **Main power supply** | 48VDC (18-75VDC) | | | |
| **Dimension H*L*W(mm)** | 76*50*33.5mm | | | |

| Ports | Descriptions |
|---|---|
| **USB Type-C** | Modify or read driver parameters without connecting to main power supply |
| **Crossover Frequency Output** | Supports phase A/B/Z differential crossover frequency output<br>Supports phase Z open collector crossover frequency output |
| **Analog Input** | 2 analog inputs（AI1/AI2）,-10V~+10V, Max. voltage: ±12V |
| **Digital Input** | 8 Digital Inputs (Supports common anode or cathode connection) |
| | 1. Clear Alarm （A-CLR）<br>2. Positive limit switch (POT)<br>3. Negative limit switch (NOT)<br>4. Homing switch (HOME-SWITCH)<br>5. Emergency stop (E-Stop) |
| **Digital Output** | 3 Digital outputs（3 double-ended, DO1~DO3） |
| | 1. Alarm (ALM)<br>2. Servo ready (SRDY)<br>3. External brake off (BRK-OFF)<br>4. Positioning completed (INP)<br>5. Velocity at arrival (AT-SPEED)<br>6. Torque limiting command (TLC)<br>7. Zero speed position (ZSP)<br>8. Velocity coincidence (V-COIN)<br>9. Position command (P-CMD)<br>10. Velocity limit (V-LIMIT)<br>11. Velocity command (V-CMD)<br>12. Servo enabled (SRV-ST)<br>13. Homing done (HOME-OK)<br>14. Position comparison (CMP-OUT) |
| **Safe Torque Off (STO)** | Available for all ELD3-EC series servo drives |
| **Encoder #2** | |
| **Holding brake** | Internal holding brake. External relay not needed |
| **Communication Port** | EtherCAT Protocol, RJ45 port, Molex port |
| **Control Mode** | |
| **Position** | Profile Position Mode (PP) |
| | Cyclic Synchronous Position Mode (CSP) |
| | Homing Mode (HM) |
| **Velocity** | Profile Velocity Mode (PV) |
| | Cyclic Synchronous Velocity Mode (CSV) |
| **Torque** | Profile Torque Mode (PT) |
| | Cyclic Synchronous Torque Mode (CST) |
| **Control Features** | |
| **Drive Mode** | IGBT SVPWM sinusoidal wave drive |
| **Feedback Method** | Encoder: RS485 Protocol |

| | | |
|---|---|---|
| **Standardized Parameters** | Quick tuning of servo driver parameters can be achieved through PC tuning tools. | |
| **Easy-to-use** | One-click tuning, Single parameter tuning, Black box, Zero tracking control | |
| **Notch Filter** | Mechanical resonance suppression. Supports up to 3 filters,50Hz~4000Hz | |
| **Vibration suppression** | End vibration suppression | |
| **DI/DO settings** | Digital inputs and outputs can be set accordingly | |
| **Alarm** | Overcurrent. Overvoltage. Undervoltage. Overheat. Overload. Overtravel. Single-Phasing. Regenerative resistor error. Position deviation error. Encoder feedback error. Excessive braking rate. EEPROM error | |
| **Software** | Driver tuning through **Motion Studio** Ver. 2.3. Parameters tuning in current loop, position loop, velocity loop; Modify I/O signal and motor parameters; Variables(velocity, position deviation, etc.) monitoring using step diagrams | |
| **Communication** | **USB Type-C** | Modbus USB2.0 (No need to connect driver to power supply) |
| | **EtherCAT** | RJ45/molex. Communication up to 128 axes to a host |
| **Dynamic Brake** | Internal dynamic brake | |
| **Position Comparison** | 42 position comparison outputs | |
| **Suitable Load Inertia** | 30 times smaller than motor inertia | |
| **Environmental requirements** | | |
| **Temperature** | Storage: -20-80℃ (Condensation free);<br>Installation: 0-55℃ (Not frozen) | |
| **Humidity** | Under 90%RH (Condensation free) | |
| **Altitude** | Up to 1000m above sea level | |
| **Vibration** | Less than 0.5G (4.9m/s2) 10-60Hz (non-continuous working) | |
| **IP ratings** | IP20 | |

## 1.4 Servo Drive Ports and Connectors

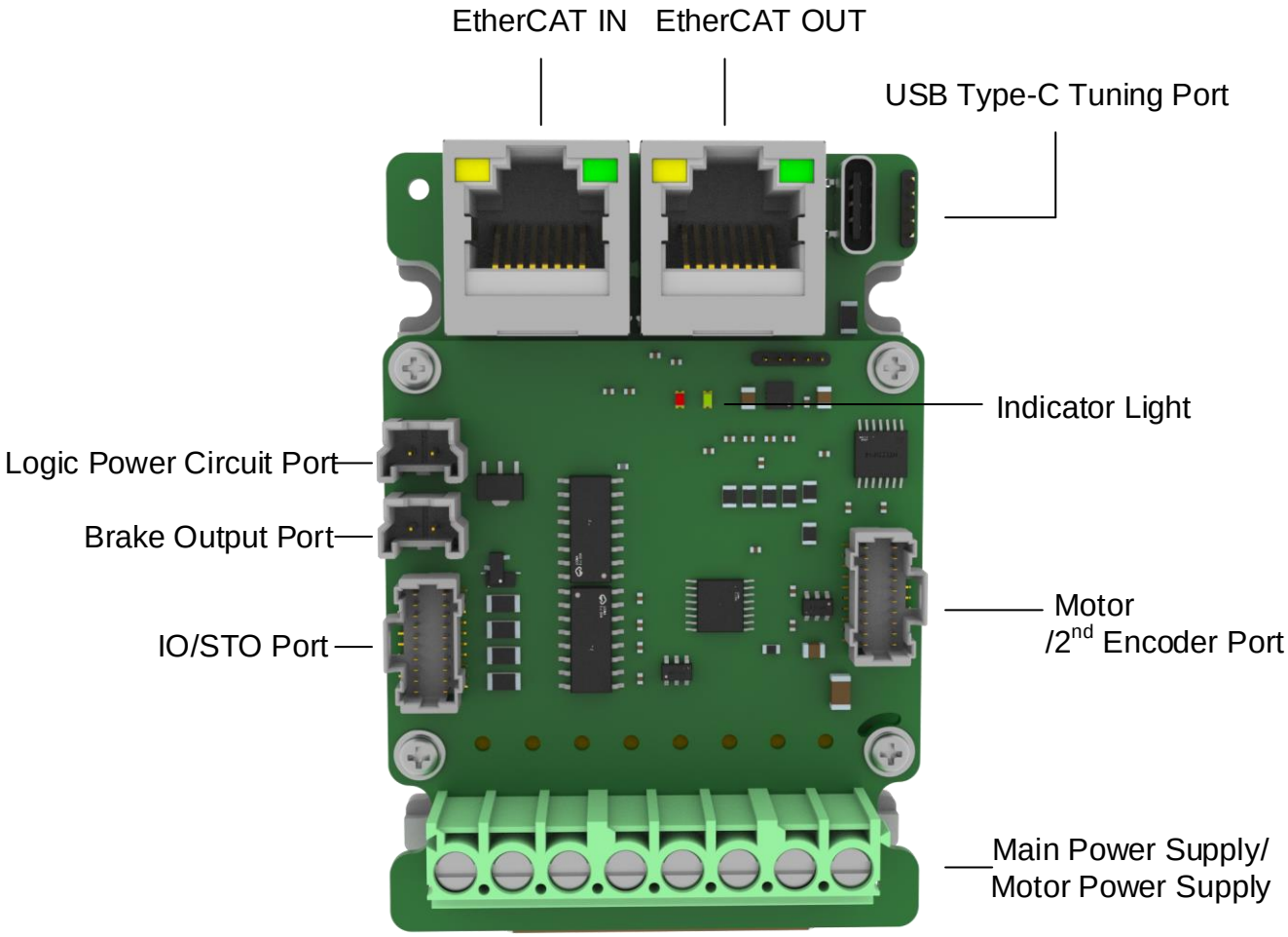


*Front View of ELD3-EC DC Servo Drive*

| Parts & Connectors | Description |
|---|---|
| Type-C Data Port | Connect to computer for tuning of servo driver. Parameters of the servo driver can be modified without connecting to main power supply. |
| IO/STO Signal Port | I/O and STO (Safe Torque Off) signal connection terminals |
| Encoder Port | Connect to motor encoder/external encoder |
| Communication Port | EtherCAT IN and OUT communication port |
| Holding Brake 24VDC | BR+/BR- brake terminals |
| Logic Power Circuit Port | Logic power circuit supply port |
| Indicator light | Lights up when servo driver is connected to main power supply. Or alarm |
| Main power supply 24-70VDC<br>Motor power supply | **DC+ & DC- ：** Main Power supply 24-70VDC<br>**RB+ & RB- :** Regenerative resistor port<br>**U, V, W, PE**: Connect to U,V,W terminals on motor and motor PE terminal |

# 1.5 Motor ports and connectors

## Motors with aviation connectors

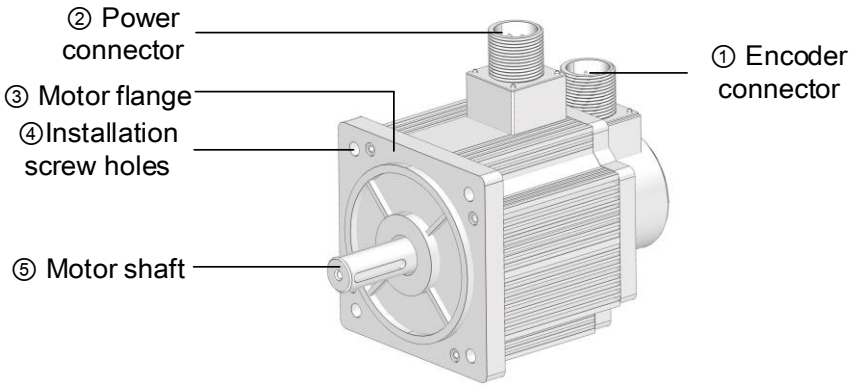

# Chapter 2 Installation & Wiring

## 2.1 Servo Drive Installation

### 2.1.1 Servo drive installation environment

| | |
|---|---|
| **Temperature** | Storage: -20-80℃ (Condensation free);<br>Installation: 0-55℃ (Not frozen) |
| **Humidity** | Under 90%RH (Condensation free) |
| **Altitude** | Up to 1000m above sea level |
| **Vibration** | Less than 0.5G (4.9m/s2) 10-60Hz (non-continuous working) |
| **Atmospheric** | No corrosive gas, combustibles, dirt or dust. |
| **IP ratings** | IP20 |

### 2.1.2 Servo drive dimension

**Dimension : ELD3-EC7001/7005/7010/7020BM**

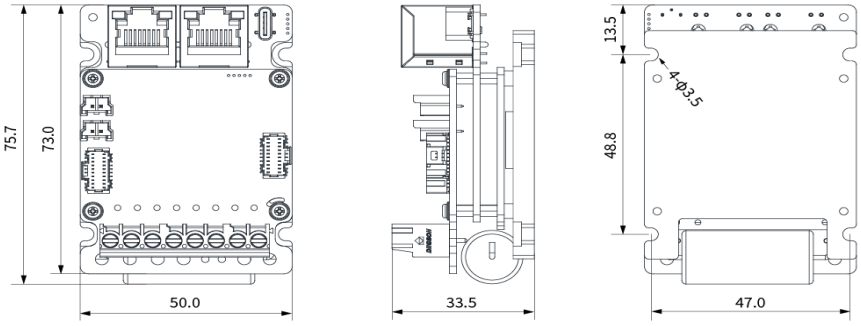


*EtherCAT RJ45*

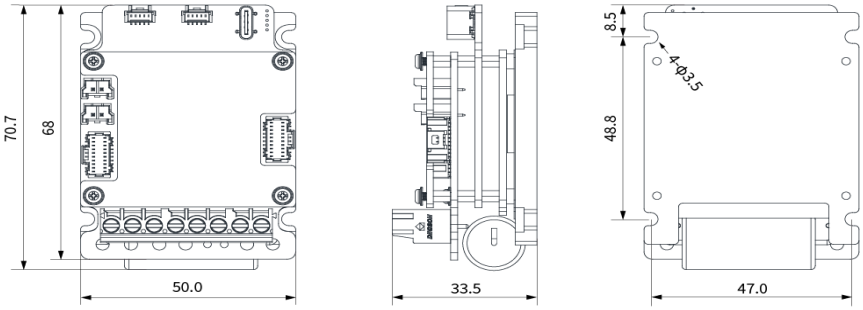


*EtherCAT MOLEX*

- **Installation method**
  Please install the driver vertical to ground facing forward for better heat dissipation. Always install in rows and use heat insulation board to separate between rows. Cooling fans are recommended for drivers to achieve optimal performance.
- **Grounding**
  PE terminals must be grounded to prevent electrocution hazard or electromagnetic interference.
- **Wiring**
  Please ensure there is no liquid around the wiring and connectors as liquid leakage may cause serious damage to the driver(s).
- **RJ45 port cover**
  Please cover unconnected RJ45 port(s) on top of the driver to prevent dust or liquid from damaging the ports.
- **Battery kit**
  If there is a need for battery kit, please remember to leave a room in the electrical cabinet for it.

## 2.2 Servo Motor Installation

### 2.2.1 Installation conditions

Installation conditions may affect the lifespan of a motor

- Please keep away from corrosive fluid and combustibles.
- If dusty working environment is unavoidable, please use motors with oil seal.
- Please keep away from heat source.
- If motor is used in enclosed environment without heat dissipation, motor lifespan will be short.
- Please check and clean the installation spot before installation.

### 2.2.2 Precautions during installation

**Installation method**

Install horizontal to ground

Make sure power cable and encoder cable is facing downwards to make sure fluid doesn't leak into the ports.

Install vertical to ground

Please use a motor with oil seal when paired with a reducer to prevent reducer oil from leaking into the motor.

**Oil- and waterproofing**

- Do not submerge motor/cable under oil/water
- Please use a motor with oil seal when paired with a reducer to prevent reducer oil from leaking into the motor.

- If there is an unavoidable fluid leakage near the motor, please use motor with better IP ratings.
- Make sure power cable and encoder cable is facing downwards to make sure fluid doesn't leak into the ports.
- Avoid the usage of motor in water/oil leaking prone environment.

## Cable under stress

- Do not the bend the cable especially at each ends of the connectors.
- Make sure to not let the cables be too tight and under tremendous stress especially thinner cables such as signal cables.

## Connectors

- Please to remove any conductive foreign objects from the connectors before installation
- The connectors are made of resin. May not withstand impact.
- Please hold the driver during transportation, not the cables.
- Leave enough "bend" on the connector cables to ensure less stress upon installation.

## Encoder & coupling

- During installation or removal of coupling, please do not hit the motor shaft with a hammer as it would cause damage to internal encoder.
- Please make sure to centralize the motor shaft and coupling, it might cause damage to motor or encoder due to vibration.
- Please make sure axial and radial load is within the limits specified as it might affect the lifespan of the motor or cause damage to it.

# 2.3 ELD3-EC Wiring Diagram

## ELD3-EC Wiring Diagram

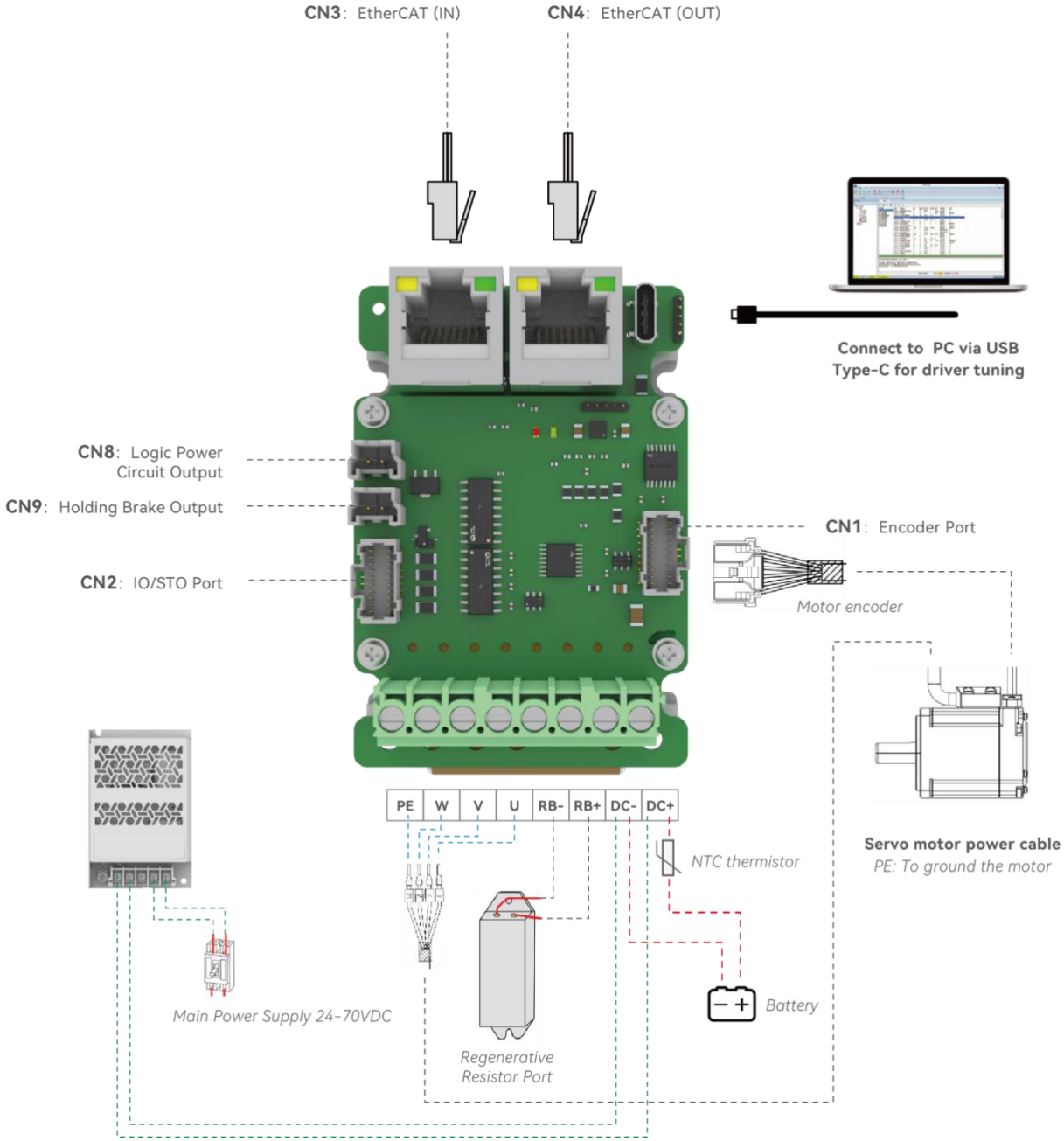

## ELD3-EC Electrical Wiring Diagram

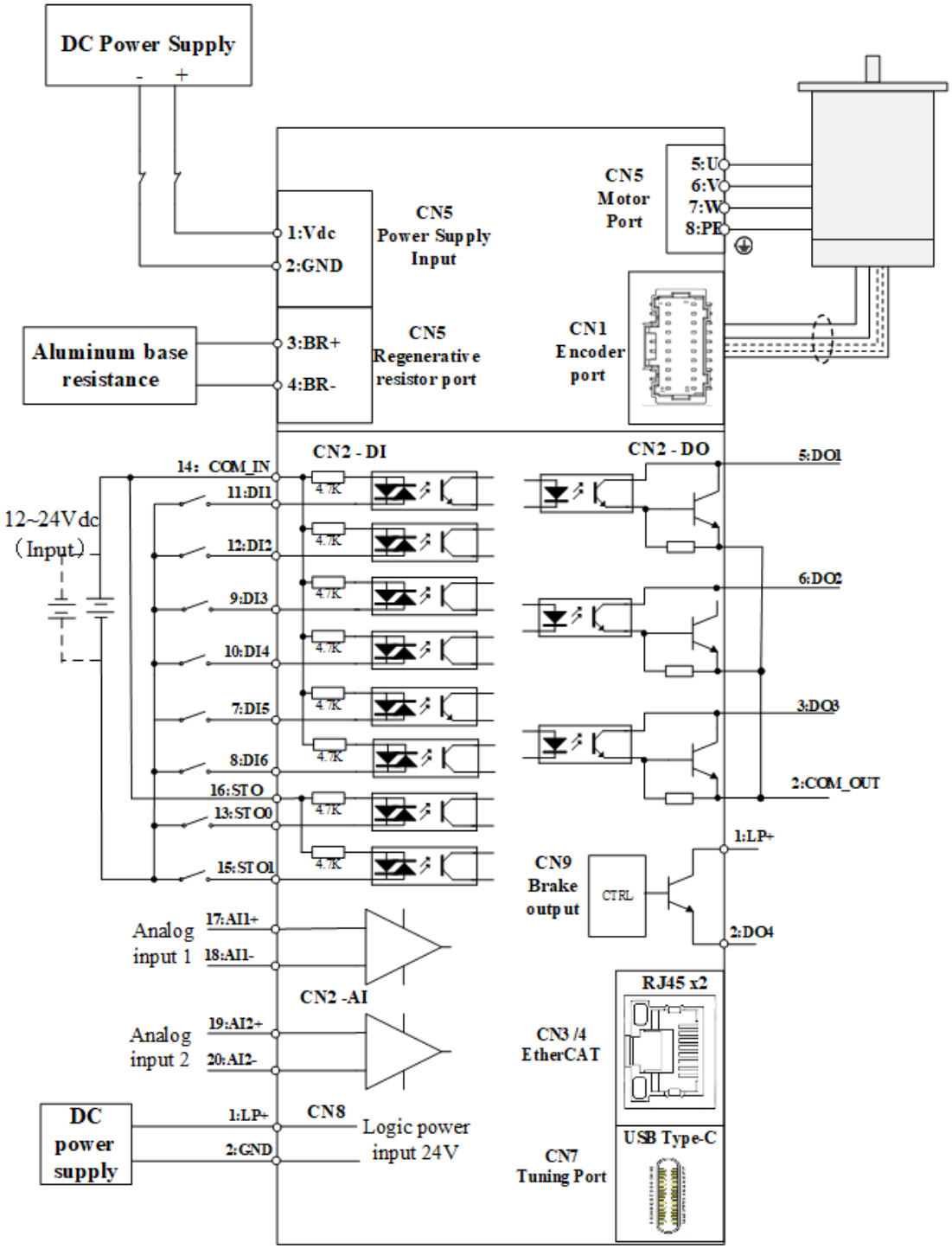

## 2.4 Servo Drive Ports

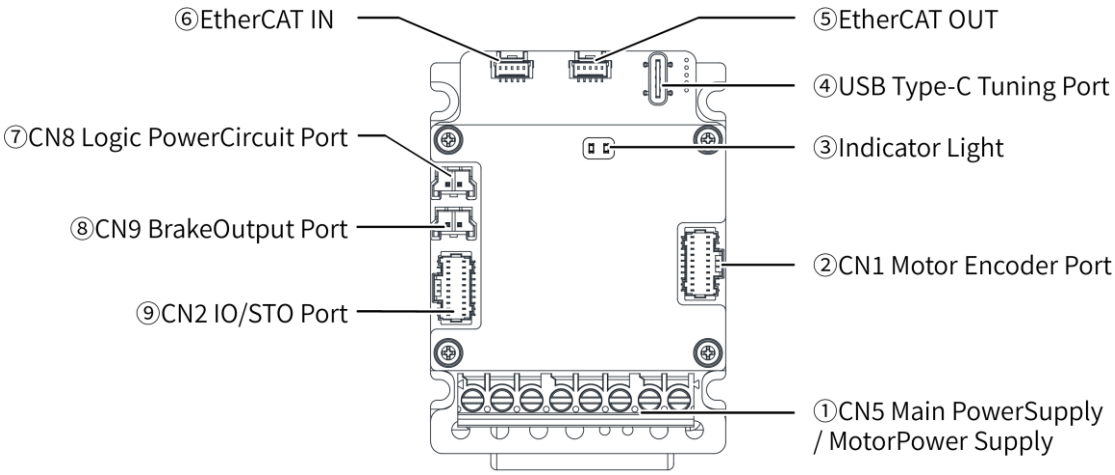


EtherCAT RJ45

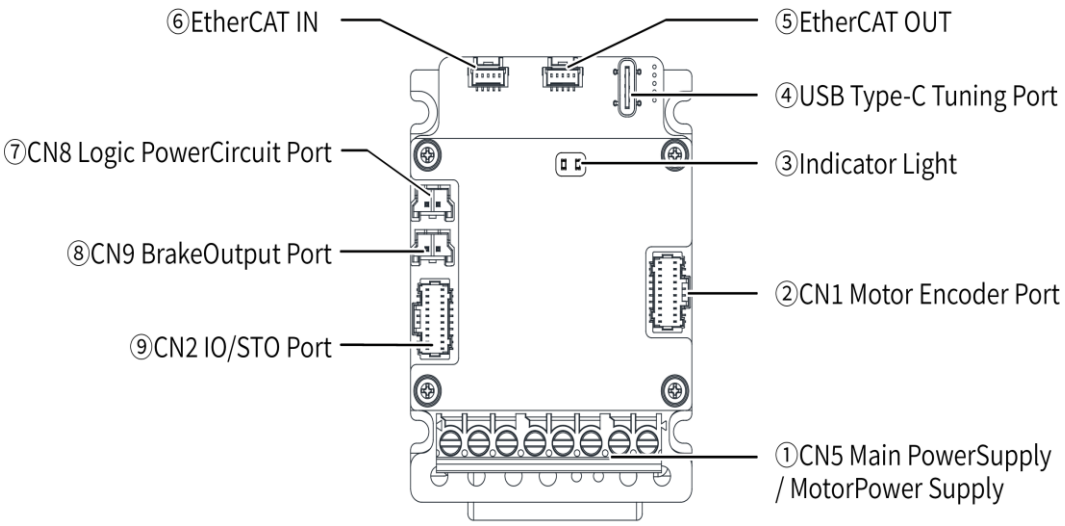


EtherCAT MOLEX

| Port | Description |
|---|---|
| CN1 | Motor/external encoder port |
| CN2 | IO/STO Port |
| CN3 | EtherCAT（IN）Communication Port |
| CN4 | EtherCAT（OUT）Communication Port |
| CN5 | Main Power Supply/Regenerative Resistor/Motor Power Supply Port |
| CN7 | USB Type-C Tuning Port (Connect to PC) |
| CN8 | Logic Power Circuit Power Supply Port |
| CN9 | Brake Output Port |

## 2.5 Main/motor power supply CN5

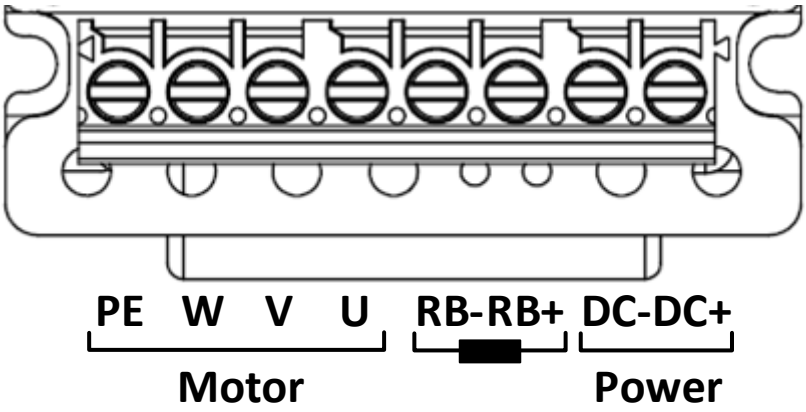


| Pin | Label | Description | Remarks |
|---|---|---|---|
| DC+ | DC power supply positive terminal | DC power supply 24-70VDC | 1. Please use an isolated transformer for the power supply.<br>2. Make sure the positive and negative terminals of the power supply is connected properly<br>3. Use a noise filter in an environment with heavy interference. |
| DC- | DC power supply negative terminal | | |
| RB+ | Regenerative resistor connection port | Please refer to section | |
| RB- | | | |
| U | Motor U-phase | Power supply from drive to motor | |
| V | Motor V-phase | | |
| W | Motor W-phase | | |
| PE | Ground Terminal | Motor ground terminal | |

## 2.6 Logic Power Input CN8

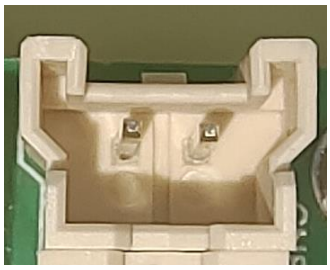

| Pin | Label | Description | Remarks |
|---|---|---|---|
| LP+ | Logic Power positive terminal | Connect to external power supply 24V | Supply power to drive's control circuit. When main power supply is cut off, drive communication and IO will be maintained functional |
| LP- | Logic Power negative terminal | Connect to external power supply 0V | |

## 2.7 Brake Output Port CN9

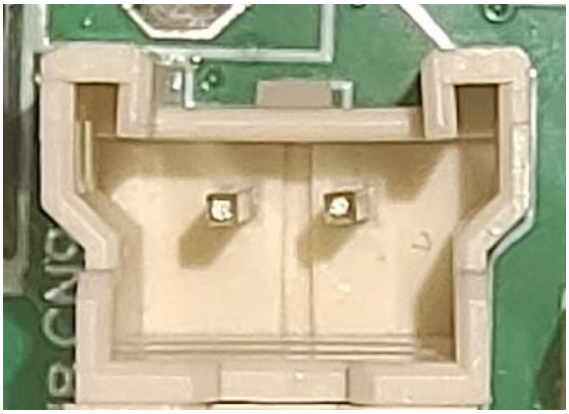

| Pin | Label | Description | Remarks |
|---|---|---|---|
| BR+ | Brake positive terminal | Connect to external power supply 24v negative terminal | If brake output is required, please use logic power circuit as power supply to motor brake |
| BR- | Brake negative terminal | Connect to motor brake terminal 0V | |

### 2.7.1 Holding brake wiring diagram

Holding brake is activated when servo drive is not powered on to prevent axis from moving due to gravitational pull or other external forces by locking the motor in place. Usually used on axis mounted vertically to the ground so that the load would not drop under gravitational force when the driver is powered off or when alarm occurs.
ELD3-EC series servo drives support direct drive holding brake. Please connect BR+ and BR- to motor brake terminal to control the holding brake. There is no need for an external relay. Logic power circuit has to be connected to an external 24V power supply.

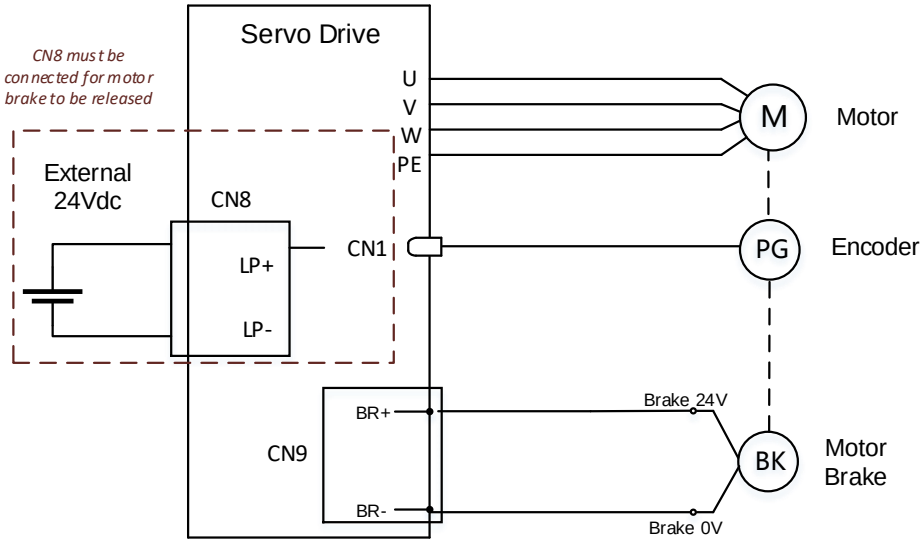

- Mechanical noise might exist when motor with holding brake is in operation but it doesn't affect the functionality of the motor.
- When the holding brake circuit is closed (holding brake deactivated), there might be magnetic flux leakage. Please be aware to not use magnetic sensor around motor with holding brake.
- 24V operating voltage for the holding brake has to be ensured to maintain the functionality of the holding brake. Please consider the voltage dropped over lengthy motor cables due to increase in cable resistance.
- It is recommended to have an isolated switching power supply for the holding brake to prevent malfunctioning of the holding brake in case of voltage drop.

*For updated information, please refer to our model selection catalogue.*

## 2.8 I/O and STO Signal Port CN2

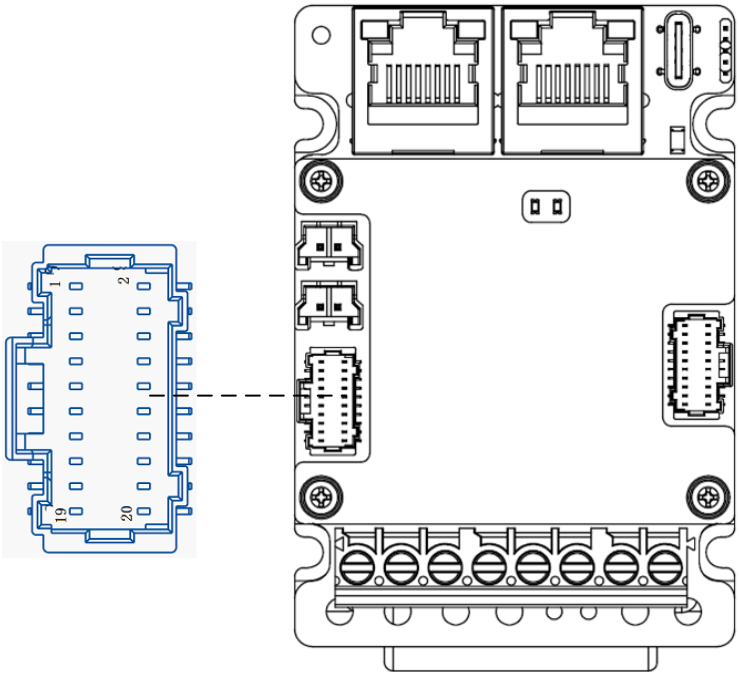


| Port | Diagram | Pin | Label | Signal | Description |
|---|---|---|---|---|---|
| CN2 | 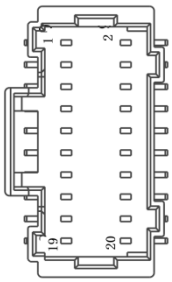 | 1 | *Null* | *Null* | *Null* |
| | | 2 | COM_OUT | Common DO | Common Digital Output |
| | | 3 | DO3 | ALM | Alarm output |
| | | 4 | *Null* | *Null* | *Null* |
| | | 5 | DO1 | BRK-OFF | Break deactivation output signal |
| | | 6 | DO2 | S-RDY | Servo Ready status output |
| | | 7 | DI5 | *Unassigned* | Digital input 5 |
| | | 8 | DI6 | *Unassigned* | Digital input 6 |
| | | 9 | DI3 | NOT | Negative limit |
| | | 10 | DI4 | HOME-SWITCH | Home signal input |
| | | 11 | DI1 | *Unassigned* | Digital Input 1 |
| | | 12 | DI2 | POT | Positive limit |
| | | 13 | STO1 | STO1 | STO1 input |
| | | 14 | DI_COM | Common DI | Common Digital Input |
| | | 15 | STO2 | STO2 | STO2 input |
| | | 16 | STO_REF | STO reference | STO reference ground |
| | | 17 | AI1+ | Analog input 1 | Analog input 1 |
| | | 18 | AI1- | | |
| | | 19 | A12+ | Analog input 2 | Analog input 2 |
| | | 20 | A12- | | |

## I/O signal cable

To ensure I/O signal to not be affected by electromagnetic interference, a **shielded twisted pair cable** is recommended for this application.

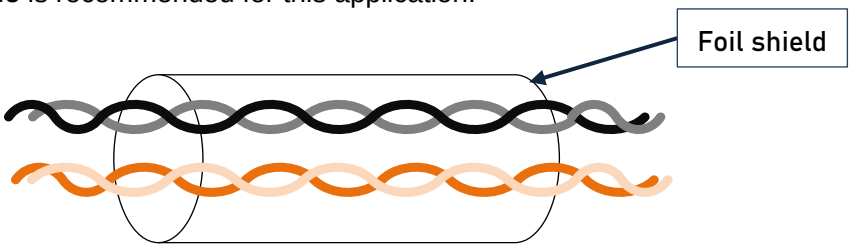


**Diameter**: Recommended to use stranded and shielded cable. For CN1, ≥0.14mm$^2$, CN2≥0.25mm$^2$, shielding layer needs to be grounded.
**Length**: Cable length should be as short as possible. No more than 3m for CN1 and 20m for CN2.
**Placement:** Place the cable away from power cables.

- Install a surge suppressor in feedback circuit; flyback diode inversely connected in parallel in DC coil and capacitor connected in parallel in AC coil.
- I/O signal included DI, DO and relay output signal
- Please keep 30cm away from main power supply cable or motor power cable to avoid electromagnetic interference.

## Introduction to Safe Torque Off (STO)

Function: Cut off motor current supply physically (through mechanical means)

STO module (CN5 connector) consists of 2 input channels. It cuts off the motor current supply by blocking of PWM control signal from the power module. When the motor current is cut off, the motor will still move under inertia and stops gradually.

The STO function is set up ready to be used by factory default. Please remove STO connector if it is not needed.

## STO functional principle

STO module cuts off the motor current supply and stops motor gradually by blocking of PWM control signal from the power module through 2 isolated circuits.

| SF1 Input Status | SF2 Input Status | PWM control signal | Alarm code |
|---|---|---|---|
| ON | ON | Normal | - |
| ON | OFF | Blocked | Er 1c2 |
| OFF | ON | Blocked | Er 1c1 |
| OFF | OFF | Blocked | Er 1c0 |

## STO wiring diagram

**When STO is applied**

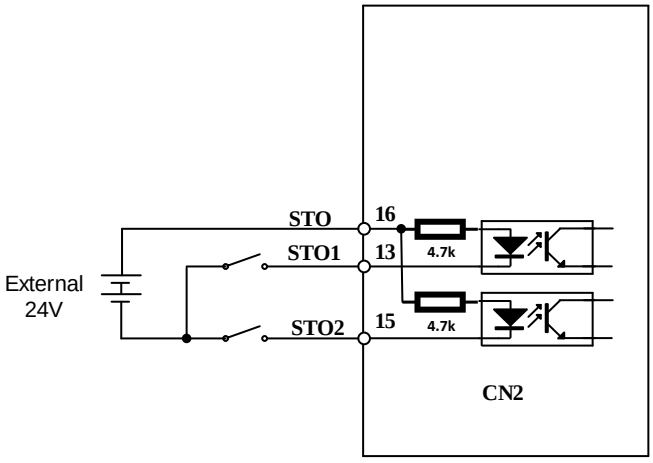

## 2.9 EtherCAT communication port CN3/CN4

| Port | Diagram | Pin | Signal | Description |
|---|---|---|---|---|
| CN3<br>CN4 | 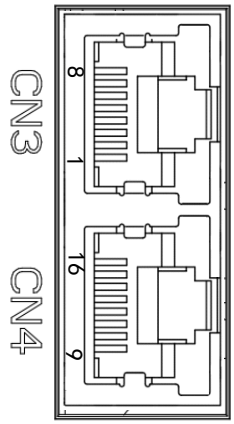 | 1, 9 | E_TX+ | EtherCAT Data sending positive terminal |
| | | 2, 10 | E_TX- | EtherCAT Data sending negative terminal |
| | | 3, 11 | E_RX+ | EtherCAT Data receiving positive terminal |
| | | 4, 12 | -- | -- |
| | | 5, 13 | -- | -- |
| | | 6, 14 | E_RX- | EtherCAT Data receiving negative terminal |
| | | 7, 15 | -- | -- |
| | | 8, 16 | -- | -- |
| | | Frame | PE | Shielding grounded |

EtherCAT RJ45

| Port | Diagram | Pin | Signal | Description |
|---|---|---|---|---|
| CN3<br>CN4 | 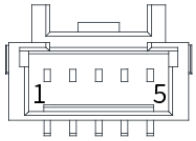 | 1 | E_TX+ | EtherCAT Data sending positive terminal |
| | | 2 | E_TX- | EtherCAT Data receiving positive terminal |
| | | 3 | E_RX+ | EtherCAT Data receiving positive terminal |
| | | 4 | E_RX- | EtherCAT Data receiving negative terminal |
| | | 5 | PE | Shielding grounded |

EtherCAT MOLEX

## 2.10 Encoder (Motor and 2nd Encoder) CN1

| Port | Diagram | Pin | Signal | Description |
|---|---|---|---|---|
| CN1 | 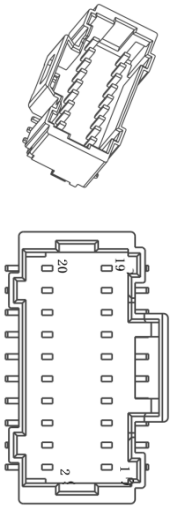 | 1 | PE | Shielding Ground |
| | | 2 | GND | Power supply ground |
| | | 3 | EA+ | Incremental Encoder A+ |
| | | 4 | EA- | Incremental Encoder A- |
| | | 5 | EB+ | Incremental Encoder B+ |
| | | 6 | EB- | Incremental Encoder B- |
| | | 7 | EZ+ | Incremental Encoder Z+ |
| | | 8 | EZ- | Incremental Encoder Z- |
| | | 9 | Hall U | Single-End Hall U |
| | | 10 | Power Supply Positive | 5V+ |
| | | 11 | Hall W | Single-End Hall W |
| | | 12 | Hall V | Single-End Hall V |
| | | 13 | RS485+ | Modbus communication (Reserved) |
| | | 14 | RS485- | |
| | | 15 | Null | Null |
| | | 16 | Null | Null |
| | | 17 | Null | Null |
| | | 18 | Null | Null |
| | | 19 | ABS+ | Absolute Encoder |
| | | 20 | ABS- | |

### External encoder pulse input

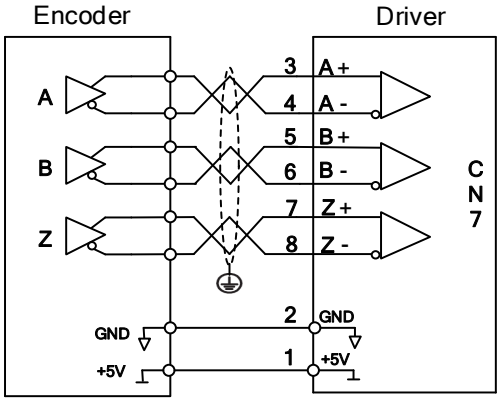


- Please connect the encoder reference ground terminal to driver ground terminal. Recommended to use double winding cable with shielding foil, Connect the shielding foil to CN7 connector to reduce noise interference.
- External encoder input method: Differential input

### Encoder Z-phase crossover frequency output (Open Collector)

Encoder output signal will be through Open Collector after frequency division. Please

connect ground terminal of external power supply to CN6 pin 6 signal ground using double winding shielded cable for better protection against interference.

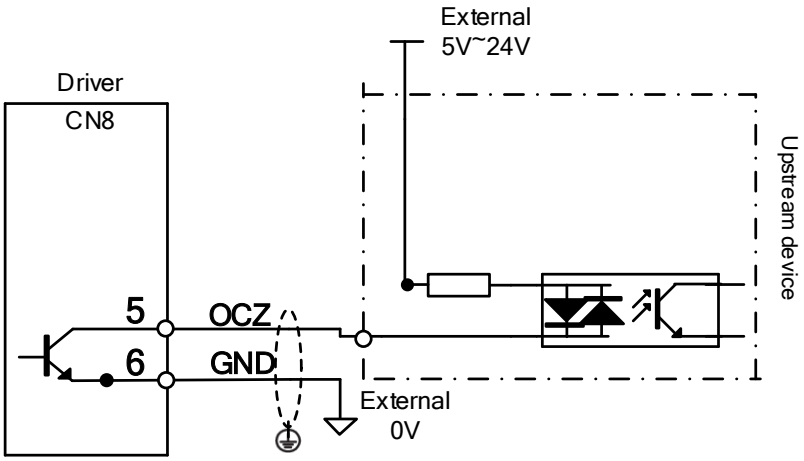


## 2.11 USB Type-C tuning port

ELD3-EC series servo drive can be connected to PC for performance tuning, data monitoring and parameters modifying using a **USB Type-C data cable**. Can be done without the servo drive connecting to main power supply.

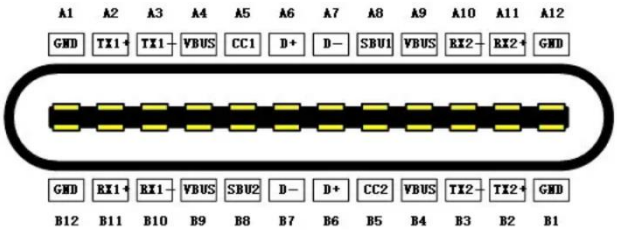


| Port | Pin | Signal | Description |
|---|---|---|---|
| USB Type-C | A4, B4,A9, B9 | VCC 5V | Power supply positive terminal 5V |
| | A12,B12,A1,B1 | GND | Power supply negative terminal |
| | A6,B6 | D+ | USB data positive terminal |
| | A7,B7 | D- | USB data negative terminal |
| | Frame | USB_GND | Ground through capacitor |

# 2.12 Cable Selection

## 2.12.1 Motor Power Cable

**Motor winding power cable**

- Wire length available: 0.5m, 1.5m, 3m, 5m, 7m and 10m.
- Connectors type available: SP21 connector
- Please contact Leadshine sales team or any Leadshine certified local retailers for any customized needs.

**M*: Length of the cable*

Motor Power Cable **CABLE-RZD*M*-263** 12AWG

Motor side

Driver side

| Driver cable pin | Pins |
|---|---|
| 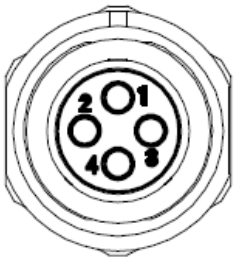 | |

| Motor | Color | Driver |
|---|---|---|
| 1 | Red | U |
| 2 | White | V |
| 3 | Black | W |
| 4 | Yellow- green | PE |

- **Grounding**: Grounding wire should be thicker. Ground PE terminal of servo drive and servo motor together with resistance <100 Ω.
- Connect a line filter to power supply to reduce electromagnetic interference.
- Please install a fuseless circuit breaker to cut off power supply in time when the driver fails.

## 2.12.2 Motor Encoder Cable

**CABLE-BMD*M*-273-T(PJ)ROHS** for single turn encoder

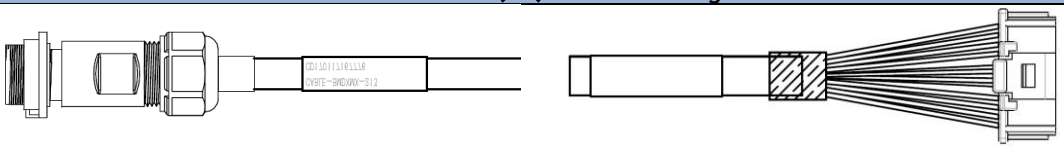

Motor side Driver side

Motor cable pin

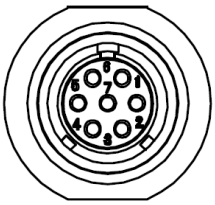

Motor side

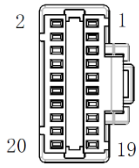


Driver side

Pin

| Color | Signal | Motor | Drive |
|---|---|---|---|
| Braid | Shield | 1 | 1 |
| Red | +5V | 2 | 10 |
| Red-white | GND | 3 | 2 |
| Blue | SD+ | 4 | 7 |
| Blue-Black | SD- | 5 | 8 |

**CABLE-BMAD*M*-283-T(PJ)ROHS** with battery kit for multiturn absolute encoder

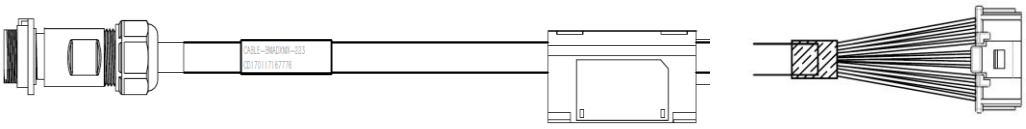

Motor side Driver side

Motor cable pin

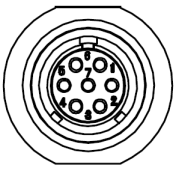

Motor side

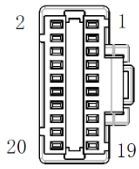


Driver side

Pin

| Color | Signal | Motor | Drive |
|---|---|---|---|
| Braid | Shield | 1 | 1 |
| Black | +5V | 2 | 10 |
| Black-White | GND | 3 | 2 |
| Blue | SD+ | 4 | 7 |
| Blue-Black | SD- | 5 | 8 |
| Red | BAT+ | 6 | - |
| Red-White | BAT- | 7 | - |

## 2.12.3 Motor Brake Cable/Logic Power Cable

**CABLE-DYOM8-LD3M-P02(PJ)RoHS/CABLEBROM8-LD3M-P02(PJ)RoHS**

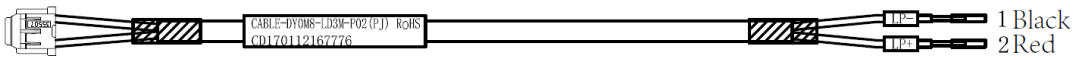


Drive side Motor side

- 22AWG cables

## 2.13 Regenerative resistor selection and connections

### The use of regenerative resistor

When the motor opposes the direction of rotation as in deceleration or vertical axis escalation, part of the regenerative energy will be delivered back to the driver. This energy will first be stored in internal capacitors of the driver. When the energy stored in the capacitors reach the maximum capacity, a regenerative resistor is required the excessive energy to prevent over-voltage.

### Selection of regenerative resistor

ELD3-EC series servo drives are equipped with internal regenerative resistor. If an external resistor is needed, please refer to the table below.

| Model no. | Recommended | | Minimum allowable |
|---|---|---|---|
| | Resistance(Ω) | Power rating(W) | Resistance(Ω) |
| ELD3-EC7005B* | 10 | 100 | 5 |
| ELD3-EC7010B* | 10 | 100 | 5 |
| ELD3-EC7020B* | 10 | 100 | 5 |

### Calculation of regenerative resistance under normal operation

Steps:

1. Determine if driver comes with a regenerative resistor. If not, please prepare a regenerative resistor with resistance value higher than might be required.
2. Monitor the load rate of the regenerative resistor using front panel (d14). Set the driver on high velocity back and forth motions with high acceleration/deceleration.
3. Please make sure to obtain the value under following conditions: Driver temperature < 60℃, d14<80(Won't trigger alarm), Regenerative resistor is not fuming, No overvoltage alarm(Err120).

*Pb(Regenerative power rating) = Resistor power rating x Regenerative load rate (%)*

Please choose a regenerative resistor with power rating Pr about **2-4 times the value of Pb** in considered of harsh working conditions and some 'headroom'.

If the calculated Pr value is less than internal resistor power rating, external resistor is not required.

$$R(\text{Max. required regenerative resistance}) = (380^2 - 370^2)/Pr$$

Problem diagnostics related to regenerative resistor:

- If driver temperature is high, reduce regenerative energy power rating or use an external regenerative resistor.
- If regenerative resistor is fuming, reduce regenerative energy power rating or use an

external regenerative resistor with higher power rating.

- If d14 is overly large or increasing too fast, reduce regenerative energy power rating or use an external regenerative resistor with higher power rating.
- If driver overvoltage alarm (Er120) occurs, please use an external regenerative resistor with lower resistance or connect another resistor in parallel.

Please take following precautions before installing an external regenerative resistor.
1. Please set the correct resistance value in P00.16 and resistor power rating P00.17 for the external regenerative resistor.
2. Please ensure the resistance value is higher or equals to the recommended values in table 2-3. Regenerative resistors are generally connected in series but they can also be connected in parallel to lower the total resistance.
3. Please provided enough cooling for the regenerative resistor as it can reach above 100℃ under continuous working conditions.
4. The min. resistance of the regenerative resistor is dependent on the IGBT of the regenerative resistor circuit. Please refer to the table above.

## Theoretical selection of regenerative resistor

Without external loading torque, the need for an external regenerative resistor can be determined as the flow chart below

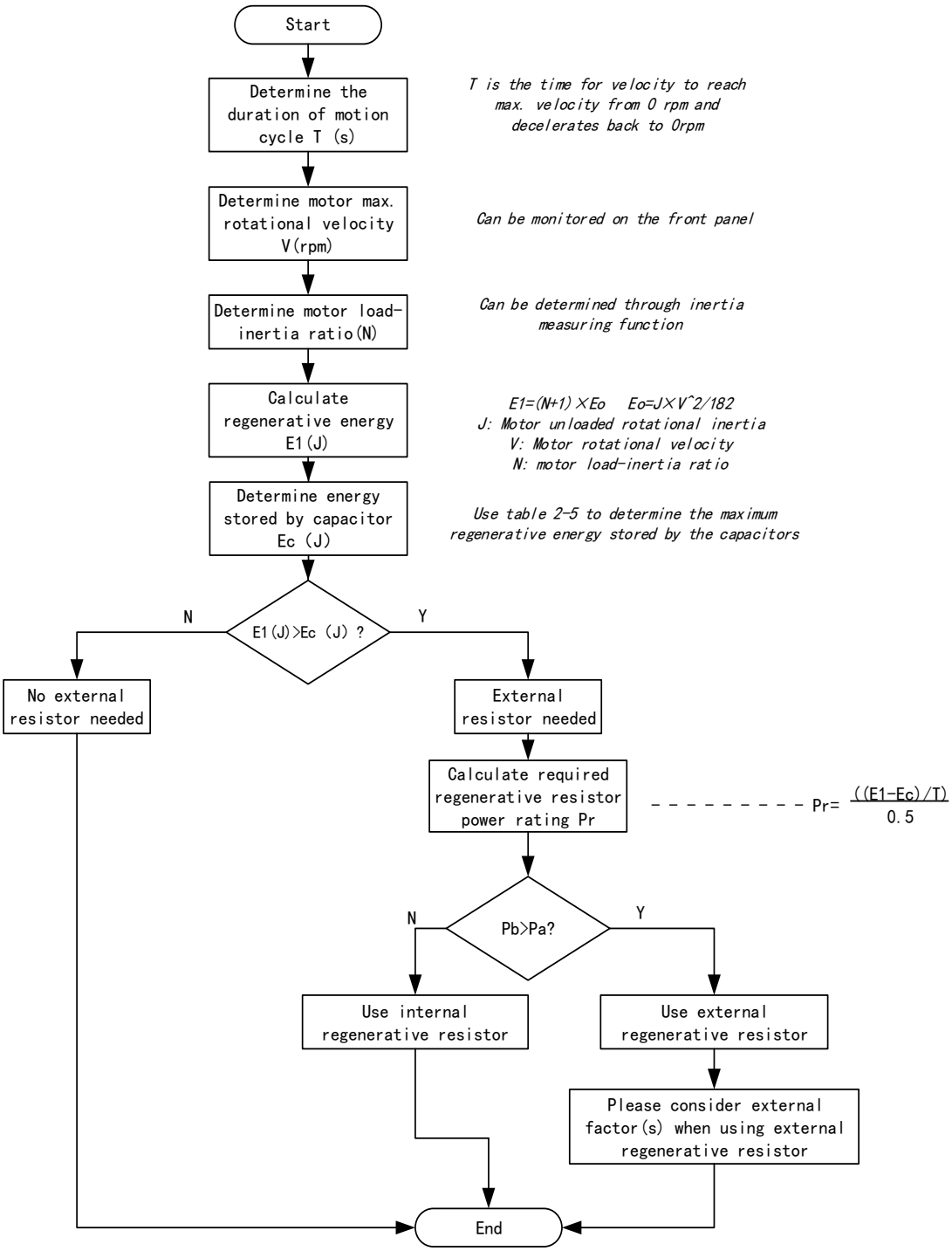

Diagram below shows the acceleration and deceleration cycle periods and the regenerative torque that occurs during the process.

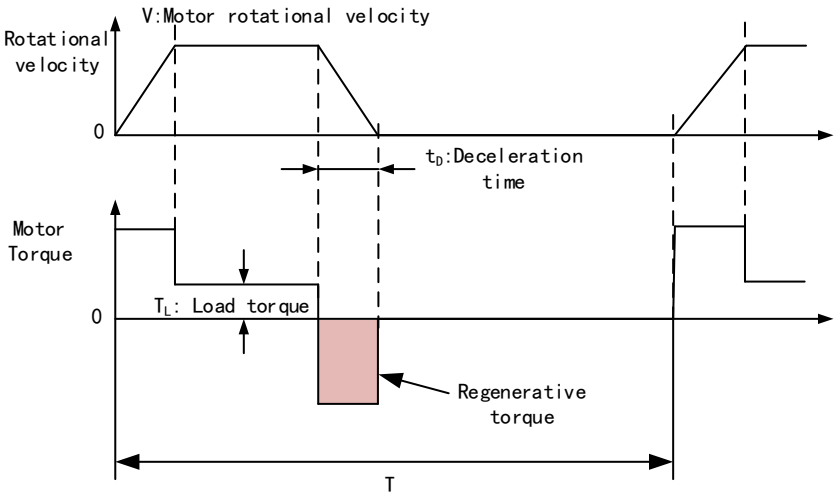


**Steps to calculate capacity of regenerative resistor**

| Steps | Calculation | Symbol | Formula |
|---|---|---|---|
| 1 | Servo system regenerative energy | E1 | $E1=(N+1)\times J\times V^2/182$ |
| 2 | Depleted energy from loss of load system during acceleration | $E_L$ | $E_L = (\pi/60)\ V\times T_L\times tD$<br>*If loss is not determined, please assume $E_L = 0$.* |
| 3 | Depleted energy due to motor coil resistance. | $E_M$ | $E_M=(U^2/R)\times tD$<br>R= coil resistance, U = operating voltage<br>*If R is not determined, please assume $E_M = 0$.* |
| 4 | Energy stored by internal DC capacitors | Ec | Please refer to table 2-5 |
| 5 | Depleted energy due to regenerative resistance | $E_K$ | $E_K$=E1-(EL+EM+EC),<br>If loss is ignored, EK=E1-EC |
| 6 | Required power rating of regenerative resistor | Pr | $Pr=E_K/(0.5\times T)$ |

**Internal capacitor capacity and rotor inertia**

| ELD3 Drives | Servo motor | Rotor Inertia （$\times 10^{-4}$kg.m$^2$） | Max. regenerative energy stored in capacitor Ec(J) |
|---|---|---|---|
| 750W (7020B) | ELVM8075V48FH-M17 | 1.5 | 2.26 |
| 1000W (7030B) | ELVM80100V48FH-M17 | 1.79 | 2.26 |

*There are motors with low, medium and high inertia. Different motor models have different rotor inertia. Please refer to product catalogue for more information on rotor inertia. Please cut down 30%-40% of load rate if the product is used in harsh environment with less than ideal heat dissipation measures.*

*Note:*
*1. Use 10Ω/100W resistor for test operation and make sure: Drive temperature d33<60℃, dynamic brake is not in alarm mode (Braking rate d14<80), brake resistor is not overheated, drive has no overcurrent alarm.*
*2. If drive temperature is too high, increase power rating of regenerative resistor or reduce drive power.*
*3. If brake resistor is overheated, reduce drive power or use regenerative resistor with higher resistance.*
*4. If d14 is too high, reduce drive power or use regenerative resistor with higher resistance and power ratings.*
*5. External torque might cause regenerative energy to flow back into drive. During normal operation, torque output in the same direction as rotational direction but if external torque exists, directions might oppose and in this case, regenerative resistor with higher resistance may be required.*

## 2.14 I/O Signal

### 2.14.1 Analog input signal

| CN1 Pin | Signal | Description |
|---|---|---|
| 17 | AI1+ | Differential,<br>Input voltage: ±10VDC,<br>Input resistance: 20kΩ |
| 18 | AI1- | |
| 19 | AI2+ | |
| 20 | AI2- | |

If variable resistor or resistor is needed, please refer to following diagram.

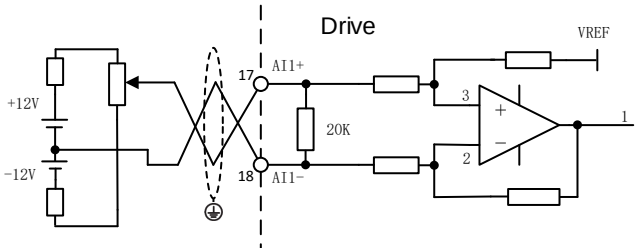


### 2.14.2 Common digital input

The internal circuit of common input is a bidirectional optocoupler which supports common anode and common cathode configurations. There are 2 types of outputs from master device: Relay output and Open Collector output as shown below.

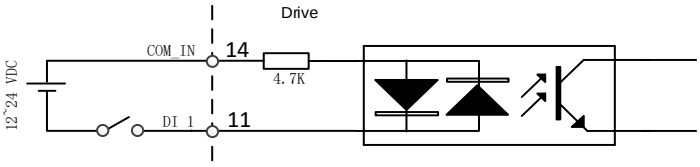


## ① Output from master device: Relay

Common anode:

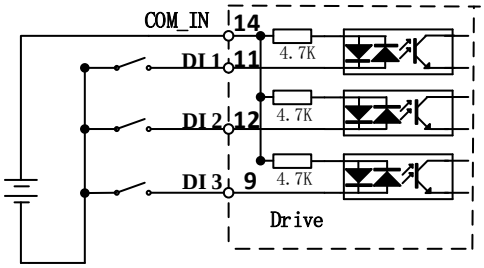


Common cathode:

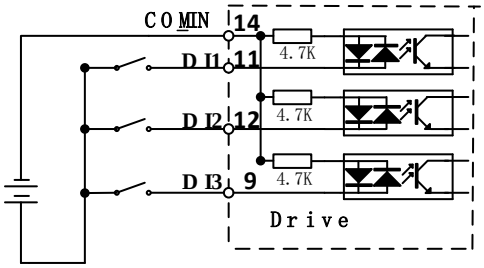


## ② Output from master device: Open Collector

NPN configuration:

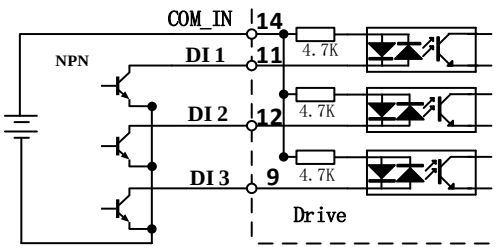


PNP configuration:

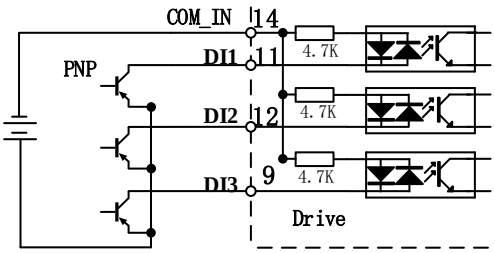


*Please prepare switching power supply with output of 12-24VDC, current≥ 100mA;*

## 2.14.3 Common digital output

There are 3 digital outputs which are double-ended with isolated 24v power supply.

**Double-ended output DO1-DO3**

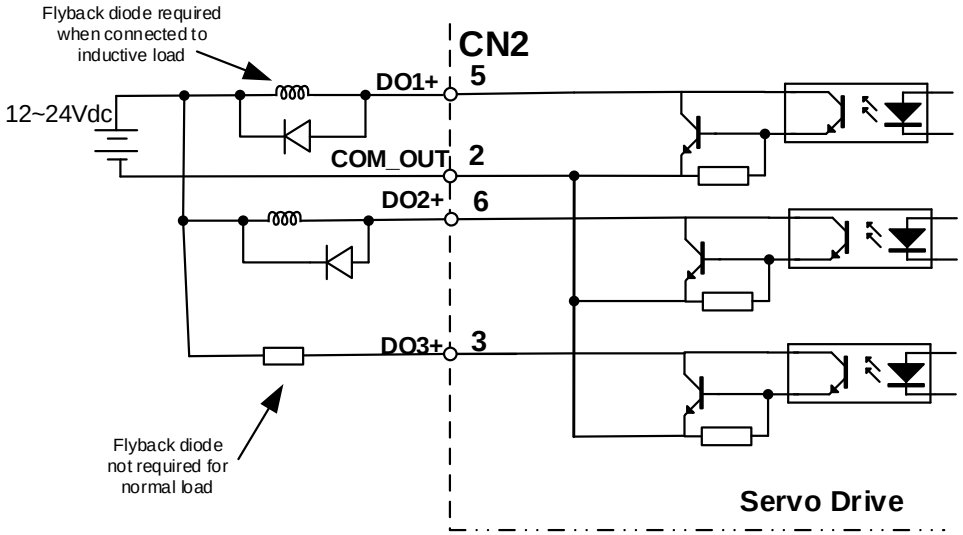


## 2.14.4 Probe input

ELD3-EC series servo drives use DI5 and DI6 as probe input terminals. DI5/DI6 is default as probe function if no other function is assigned to them. Internal circuit is a bidirectional optocoupler.

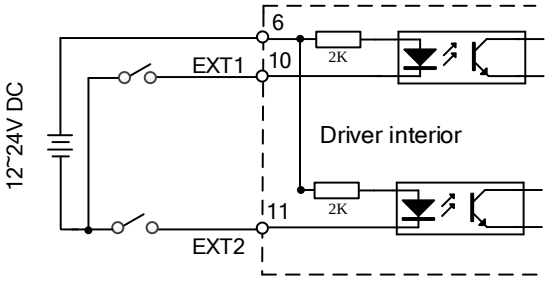


## 2.14.5 Digital Input Signal Settings

| CN1 PIN | Signal | Parameter | Set value | | Default function | Default status |
|---|---|---|---|---|---|---|
| | | | NO | NC | | |
| 14 | DI-COM | - | | | Common DI | - |
| 11 | DI1 | P04.00 | 0 | | - | Normally open |
| 12 | DI2 | P04.01 | 1 | 81 | POT | Normally open |
| 9 | DI3 | P04.02 | 2 | 82 | NOT | Normally open |
| 10 | DI4 | P04.03 | 16 | 96 | HOME-SWITCH | Normally open |

| | | | | | | |
|---|---|---|---|---|---|---|
| 7 | DI5 | P04.04 | | | - | Normally open |
| 8 | DI6 | P04.05 | | | - | Normally open |

- When limit switch or emergency stop is used, POT, NOT and E-STOP signal will be normally close (NC) by default. Please make sure there is no safety concern if these signals need to be set to normally open (NO).
- Servo drive power on signal (SRV-ON) is set as normally open (NO) as default. Please make sure there is no safety concern if this signal needs to be set to normally close (NC).
- If a same function is assigned to multiple pins, Er210 might occur.

**Assignable Digital Input Signals**

| **Label** | Homing Signal | | | **Mode** | **P** | **S** | **T** |
|---|---|---|---|---|---|---|---|
| **Signal** | HOME-SWITCH | **Default assignment** | 10(DI4) | **I/O circuit** | | | |
| | Homing sensor signal input | | | | | | |

| **Label** | Positive Limit Switch | | | **Mode** | **P** | **S** | **T** |
|---|---|---|---|---|---|---|---|
| **Signal** | POT | **Default assignment** | 11(DI1) | **I/O circuit** | | | |
| | Positive limit sensor signal input<br>Please refer to P05.04 to set up this function. | | | | | | |

| **Label** | Negative Limit Switch | | | **Mode** | **P** | **S** | **T** |
|---|---|---|---|---|---|---|---|
| **Signal** | NOT | **Default assignment** | 12(DI2) | **I/O circuit** | | | |
| | Negative limit sensor signal input<br>Please refer to P05.04 to set up this function. | | | | | | |

| **Label** | Clear Alarm | | | **Mode** | **P** | **S** | **T** |
|---|---|---|---|---|---|---|---|
| **Signal** | A-CLR | **Default assignment** | - | **I/O circuit** | | | |
| | Clear alarm status input.<br>Please mind that some alarms might not be able to be cleared using this input. | | | | | | |

| **Label** | Emergency Stop | | | **Mode** | **P** | **S** | **T** |
|---|---|---|---|---|---|---|---|
| **Signal** | E-STOP | **Default assignment** | - | **I/O circuit** | | | |
| | Emergency Stop input signal.<br>Er570 will occur when E-STOP signal is valid, motor will stop | | | | | | |

## 2.14.6 Digital Output Signal Settings

| CN1 PIN | Signal | Parameter | Function |
|---|---|---|---|
| 5 | DO1 | P04.10 | External Brake Deactivate Output **BRK-OFF** |
| 6 | DO2 | P04.11 | Servo Ready Output **S-RDY** |
| 3 | DO3 | P04.12 | Alarm Output **ALARM** |

➢ Digital output functions can be assigned to multiple pins at the same time.

**Assignable Digital Output Signals**

| **Label** | Alarm | | | **Mode** | **P** | **S** | **T** |
|---|---|---|---|---|---|---|---|
| **Signal** | ALARM | **Default assignment** | 3(DO3) | **I/O circuit** | | | |
| | Signal output when driver alarm occurs | | | | | | |

| **Label** | Servo Ready | | | **Mode** | **P** | **S** | **T** |
|---|---|---|---|---|---|---|---|
| **Signal** | S-RDY | **Default assignment** | 6(DO2) | **I/O circuit** | | | |
| | Signal output when servo is powered on | | | | | | |

| **Label** | Positioning completed | | | **Mode** | **P** | | |
|---|---|---|---|---|---|---|---|
| **Signal** | INP | **Default assignment** | | **I/O circuit** | | | |
| | Signal output when positioning completed within set range | | | | | | |

| **Label** | External brake released | | | **Mode** | **P** | **S** | **T** |
|---|---|---|---|---|---|---|---|
| **Signal** | BRK-OFF | **Default assignment** | 5(DO1) | **I/O circuit** | | | |
| | Signal valid to hold braking action | | | | | | |

| **Label** | Velocity reached | | | **Mode** | | **S** | **T** |
|---|---|---|---|---|---|---|---|
| **Signal** | AT-SPEED | **Default assignment** | | **I/O circuit** | | | |
| | Velocity reached signal | | | | | | |

| **Label** | Torque limit signal | | | **Mode** | **P** | **S** | **T** |
|---|---|---|---|---|---|---|---|
| **Signal** | TLC | **Default assignment** | | **I/O circuit** | | | |
| | Torque limiting signal | | | | | | |

| **Label** | Zero speed clamp detection | | | **Mode** | **P** | **S** | **T** |
|---|---|---|---|---|---|---|---|
| **Signal** | ZSP | **Default assignment** | | **I/O circuit** | | | |
| | Zero speed clamp activation signal | | | | | | |

| | | | | | | | |
|---|---|---|---|---|---|---|---|
| **Label** | Velocity reached | | | **Mode** | | **S** | **T** |
| **Signal** | V-COIN | **Default assignment** | | **I/O circuit** | | | |
| | Signal output when actual velocity reaches set velocity. | | | | | | |

| | | | | | | | |
|---|---|---|---|---|---|---|---|
| **Label** | Servo Status | | | **Mode** | **P** | **S** | **T** |
| **Signal** | SRV-ST | **Default assignment** | | **I/O circuit** | | | |
| | Signal output when servo is enabled. | | | | | | |

| | | | | | | | |
|---|---|---|---|---|---|---|---|
| **Label** | Positive limit valid | | | **Mode** | | **S** | **T** |
| **Signal** | POT-OUT | **Default assignment** | | **I/O circuit** | | | |
| | Signal output when positive position limit signal valid. | | | | | | |

| | | | | | | | |
|---|---|---|---|---|---|---|---|
| **Label** | Negative limit valid | | | **Mode** | | **S** | **T** |
| **Signal** | NOT-OUT | **Default assignment** | | **I/O circuit** | | | |
| | Signal output when negative position limit signal valid | | | | | | |

| | | | | | | | |
|---|---|---|---|---|---|---|---|
| **Label** | Position command ON/OFF | | | **Mode** | **P** | | |
| **Signal** | P-CMD | **Default assignment** | | **I/O circuit** | | | |
| | Signal valid when position command ON | | | | | | |

| | | | | | | | |
|---|---|---|---|---|---|---|---|
| **Label** | Velocity command ON/OFF | | | **Mode** | | **S** | |
| **Signal** | V-CMD | **Default assignment** | | **I/O circuit** | | | |
| | Signal valid when velocity command ON in velocity control mode | | | | | | |

| | | | | | | | |
|---|---|---|---|---|---|---|---|
| **Label** | Position comparison | | | **Mode** | **P** | | |
| **Signal** | CMP-OUT | **Default assignment** | | **I/O circuit** | | | |
| | When position comparison condition is satisfied, output according to selected method: Flip or pulse width output. | | | | | | |

## 2.15 Measures against electromagnetic interference

To reduce interference, please take the following measures:

- I/O signal cable > 3m; Encoder cable > 20m
- Use cable with larger diameter for grounding
  ①Grounding resistance > 100Ω
  ②When there are multiple drivers connected in parallel, PE terminal of the main power supply and ground terminal of servo drives must be connected to copper ground bar in the electrical cabinet and the copper ground bar needs to be connected to the metal frame of the cabinet.
- Please install a line filter on main power supply cable to prevent interference from radio frequency.
- In order to prevent malfunctions caused by electromagnetic interference, please take following measures:
  ① Install master device and line filter close to the servo drive
  ② Install surge suppressor for relay and contactor
  ③ Please separate signal/encoder cable from power cable with a space of at least 30cm
  ④ Install a line filter for the main power supply if a device with high frequency generation such as a welding machine exists nearby

### 2.15.1 Grounding connection and other anti-interference wiring connections

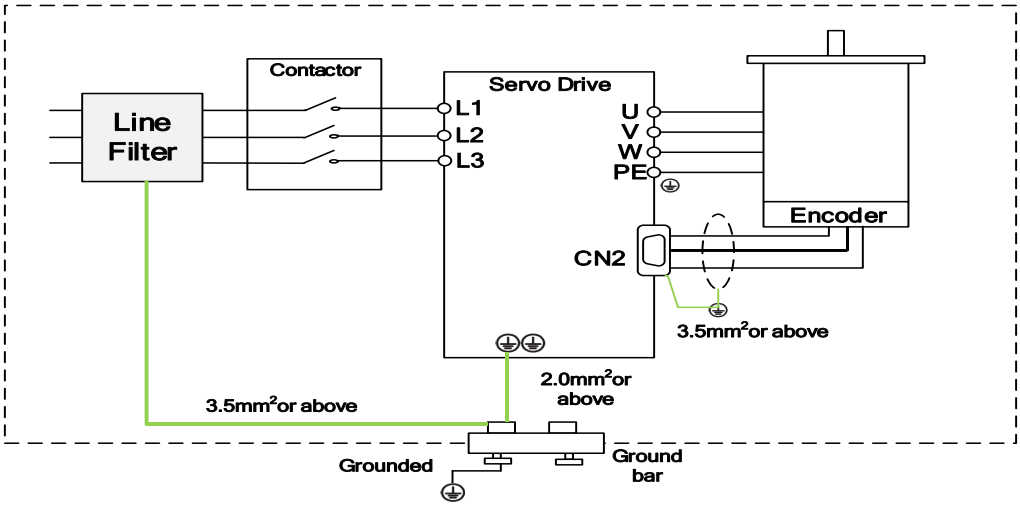


- Servo motor frame should be grounded. Please connect the PE terminal of servo motor and servo drive and ground them together to reduce interference.
- Ground both ends of the foil shield of encoder cable.

## 2.15.2 Using line filter

To reduce interference from main power supply cable and to prevent from affecting other sensitive components around the servo drive, please choose a line filter based on actual supply current. Please do be aware of the following mistake when installing a line filter.

Do not band the main power supply cable together.

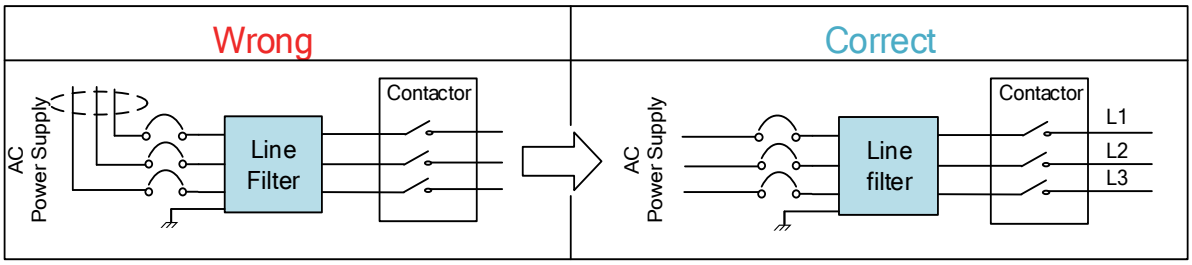


Separate the ground wire from the line filter and the main power supply cable.

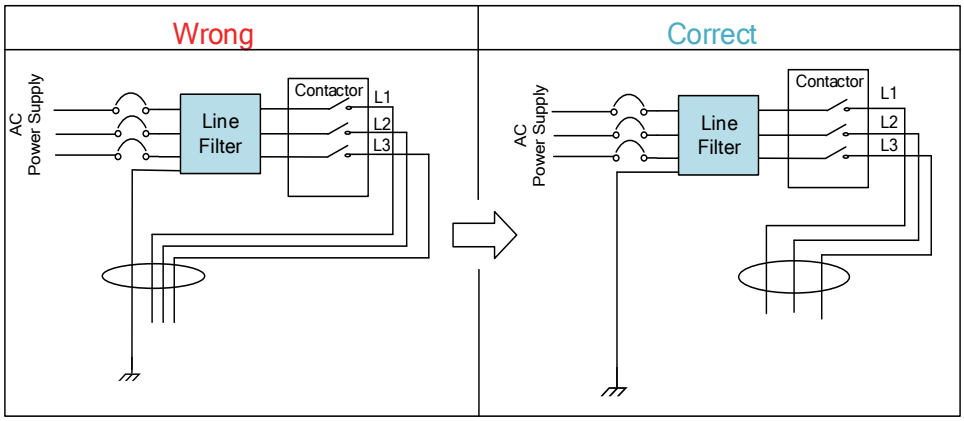


Ground wires inside an electrical cabinet

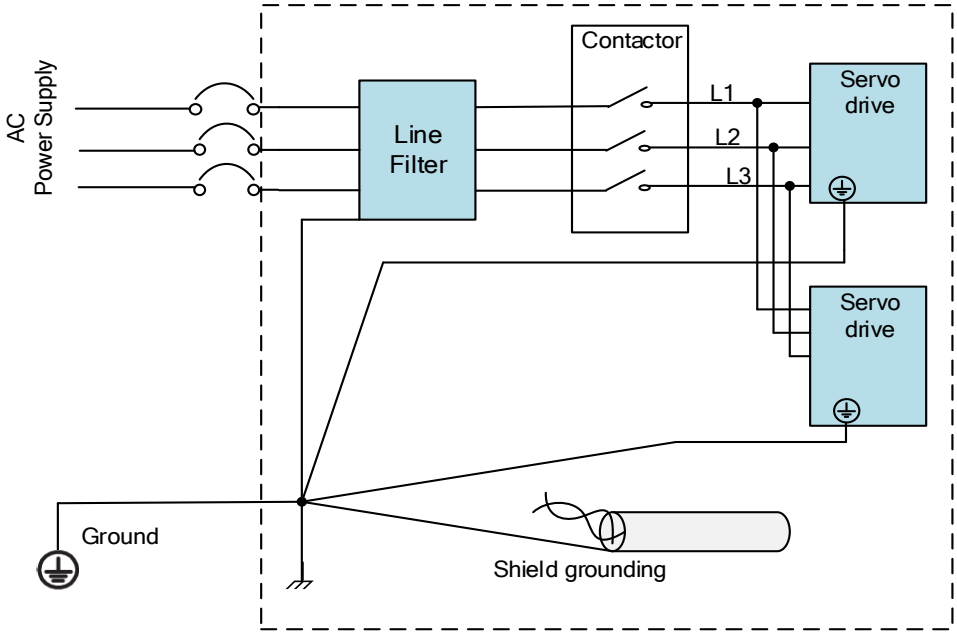

# Chapter 3 Parameter

## 3.1 Parameter List

- Panel Display as follows:

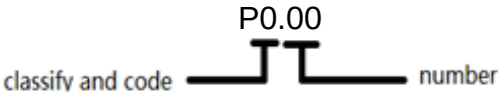


- Parameter Valid mode Description
  CSP: Valid in cyclic synchronous position mode
  CSV: Valid in cyclic synchronous velocity mode
  CST: Valid in cyclic synchronous torque mode
  HM: Valid in homing mode
  PP: Valid in profile position mode
  PV: Valid in profile velocity mode
  PT: Valid in profile torque mode
  F: Valid in all modes

### 3.1.1 Servo drive parameter

| Label | EtherCAT Address | Panel display | Default | Activation |
|---|---|---|---|---|
| Model-following bandwidth | 2000h | P0 000 | 1 | Immediate |
| Control Mode Settings | 2001h | P0 001 | 9 | After restart |
| Real time Auto Gain Adjusting | 2002h | P0 002 | 0x001 | Immediate |
| Real time auto stiffness adjusting | 2003h | P0 003 | 70 | Immediate |
| Inertia ratio | 2004h | P0 004 | 250 | Immediate |
| Command polarity inversion | 2006h | P0 006 | 0 | After restart |
| Probe signal polarity settings | 2007h | P0 007 | 3 | After restart |
| Command pulse counts per revolution | 2008h | P0 008 | 0 | After restart |
| Encoder pulse output per revolution | 2011 | P0 011 | 2500 | After restart |
| Pulse output logic inversion | 2012 | P0 012 | 0 | After restart |
| 1st Torque Limit | 2013h | P0 013 | 300 | Immediate |
| Excessive Position Deviation Settings | 2014h | P0 014 | 30 | Immediate |
| Absolute Encoder settings | 2015h | P0 015 | 0 | After restart |
| Regenerative resistance | 2016h | P0 016 | 100 | Immediate |

| | | | | |
|---|---|---|---|---|
| Regenerative resistor power rating | 2017h | P0 017 | 50 | Immediate |
| Friction compensation setting | 2019h | P0 019 | 1000 | Immediate |
| EtherCAT slave ID | 2023h | P0 023 | 2 | After restart |
| Source of slave ID | 2024h | P0 024 | 1 | After restart |
| Synchronous compensation time 1 | 2025h | P0 025 | 10 | After restart |
| Synchronous compensation time 2 | 2026h | P0 026 | 50 | After restart |
| Synchronization mode command delay cycle counts | 2027h | P0 027 | 0 | After restart |
| CSP mode safe self-running position setting | 2028h | P0 028 | 10 | Immediate |
| Encoder feedback mode | 2030h | P0 030 | 0 | Immediate |
| External encoder type | 2031h | P0 031 | 0 | After restart |
| External encoder direction | 2032h | P0 032 | 0 | After restart |
| Excessive hybrid deviation | 2033h | P0 033 | 16000 | After restart |
| Clear excess hybrid control deviation | 2034h | P0 034 | 0 | After restart |
| External encoder frequency divider numerator | 2035h | P0 035 | 0 | After restart |
| External encoder frequency divider denominator | 2036h | P0 036 | 0 | After restart |
| External encoder feedback pulse count per revolution | 2037h | P0 037 | 0 | After restart |
| Z-signal pulse input source | 2038h | P0 038 | 0 | After restart |

| Label | EtherCAT Address | Panel display | Default | Activation |
|---|---|---|---|---|
| 1st position loop gain | 2100h | P0 100 | 320 | Immediate |
| 1st velocity loop gain | 2101h | P0 101 | 180 | Immediate |
| 1st Integral Time Constant of Velocity Loop | 2102h | P0 102 | 310 | Immediate |
| 1st velocity detection filter | 2103h | P0 103 | 15 | Immediate |
| 1st Torque Filter Time Constant | 2104h | P0 104 | 126 | Immediate |
| 2nd Position Loop Gain | 2105h | P0 105 | 380 | Immediate |
| 2nd velocity loop gain | 2106h | P0 106 | 180 | Immediate |
| 2nd Integral Time Constant of Velocity Loop | 2107h | P0 107 | 10000 | Immediate |
| 2nd velocity detection filter | 2108h | P0 108 | 15 | Immediate |
| 2nd Torque Filter Time Constant | 2109h | P0 109 | 126 | Immediate |
| Velocity feed forward gain | 2110h | P0 110 | 300 | Immediate |
| Velocity feed forward filter time constant | 2111h | P0 111 | 50 | Immediate |
| Torque feed forward gain | 2112h | P0 112 | 0 | Immediate |
| Torque feed forward filter | 2113h | P0 113 | 0 | Immediate |

| | | | | |
|---|---|---|---|---|
| time constant | | | | |
| Position control gain switching mode | 2115h | P0 115 | 0 | Immediate |
| Position control gain switching level | 2117h | P0 117 | 50 | Immediate |
| Hysteresis at position control switching | 2118h | P0 118 | 33 | Immediate |
| Position gain switching time | 2119h | P0 119 | 33 | Immediate |
| External ABZ encoder filter time | 2136h | P0 136 | 0 | Immediate |
| Unique registry | 2137h | P0 137 | 0 | Immediate |
| Unique registry 1 | 2138h | P0 138 | 0x0 | Immediate |
| Unique registry 2 | 2139h | P0 139 | 0x0 | Immediate |
| Torque Filter Type | 2166h | P0 166 | 0 | Re-enable |
| Torque Filter Settings | 2167 | P0 167 | 0 | Immediate |

| Label | EtherCAT Address | Panel display | Default | Activation |
|---|---|---|---|---|
| Adaptive filtering mode settings | 2200h | P0 200 | 0 | Immediate |
| 1st notch frequency | 2201h | P0 201 | 4000 | Immediate |
| 1st notch bandwidth selection | 2202h | P0 202 | 4 | Immediate |
| 1st notch depth selection | 2203h | P0 203 | 0 | Immediate |
| 2nd notch frequency | 2204h | P0 204 | 4000 | Immediate |
| 2nd notch bandwidth selection | 2205h | P0 205 | 4 | Immediate |
| 2nd notch depth selection | 2206h | P0 206 | 0 | Immediate |
| 3rd notch frequency | 2207h | P0 207 | 4000 | Immediate |
| 3rd notch bandwidth selection | 2208h | P0 208 | 4 | Immediate |
| 3rd notch depth selection | 2209h | P0 209 | 0 | Immediate |
| 1st damping frequency | 2214h | P0 214 | 0 | Immediate |
| 2nd damping frequency | 2216h | P0 216 | 0 | Immediate |
| Position command smoothing filter | 2222h | P0 222 | 300 | After stopping |
| Position command FIR filter | 2223h | P0 223 | 0 | Disable |
| 5th resonant frequency | 2231h | P0 231 | 4000 | Immediate |
| 5th resonant Q value | 2232h | P0 232 | 0 | Immediate |
| 5th anti-resonant frequency | 2233h | P0 233 | 4000 | Immediate |
| 5th anti-resonant Q value | 2234h | P0 234 | 0 | Immediate |
| 6th resonant frequency | 2235h | P0 235 | 4000 | Immediate |
| 6th resonant Q value | 2236h | P0 236 | 0 | Immediate |
| 6th anti-resonant frequency | 2237h | P0 237 | 4000 | Immediate |
| 6th anti-resonant Q value | 2238h | P0 238 | 0 | Immediate |

| | | | | |
|---|---|---|---|---|
| Adjustment mode | 2248h | P0 248 | 0 | Immediate |
| MFC type | 2250h | P0 250 | 0 | Immediate |
| Velocity feedforward compensation coefficient | 2251h | P0 251 | 0 | Immediate |
| Torque feedforward compensation coefficient | 2252h | P0 252 | 0 | Immediate |
| Dynamic friction compensation coefficient | 2253h | P0 253 | 0 | Immediate |
| Overtravel time coefficient | 2254h | P0 254 | 0 | Immediate |
| Overtravel suppression gain | 2255h | P0 255 | 0 | Immediate |

| Label | EtherCAT Address | Panel display | Default | Activation |
|---|---|---|---|---|
| Acceleration time settings | 2312h | P0 312 | 0 | Immediate |
| Deceleration time settings | 2313h | P0 313 | 0 | Immediate |
| Sigmoid acceleration/ deceleration settings | 2314h | P0 314 | 0 | Disable |
| Zero speed clamp function | 2315h | P0 315 | 0 | Immediate |
| Zero speed clamp level | 2316h | P0 316 | 30 | Immediate |
| Zero speed clamp static time | 2323h | P0 323 | 0 | Immediate |

| Label | EtherCAT Address | Panel display | Default | Activation |
|---|---|---|---|---|
| Input selection DI1 | 2400h | P0 400 | 0x0 | Immediate |
| Input selection DI2 | 2401h | P0 401 | 0x0 | Immediate |
| Input selection DI3 | 2402h | P0 402 | 0x0 | Immediate |
| Input selection DI4 | 2403h | P0 403 | 0x0 | Immediate |
| Input selection DI5 | 2404h | P0 404 | 0x0 | Immediate |
| Input selection DI6 | 2405h | P0 405 | 0x0 | Immediate |
| Input selection DI7 | 2406h | P0 406 | 0x0 | Immediate |
| Input selection DI8 | 2407h | P0 407 | 0x0 | Immediate |
| Output selection DO1 | 2410h | P0 410 | 0x0 | Immediate |
| Output selection DO2 | 2411h | P0 411 | 0x0 | Immediate |
| Output selection DO3 | 2412h | P0 412 | 0x0 | Immediate |
| Analog input 1 zero drift | 2422h | P0 422 | 0 | Immediate |
| Analog input 1 filter | 2423h | P0 423 | 0 | Immediate |
| Analog input 1 overvoltage | 2424h | P0 424 | 0 | Immediate |
| Analog input 2 zero drift | 2425h | P0 425 | 0 | Immediate |
| Analog input 2 filter | 2426h | P0 426 | 0 | Immediate |
| Analog input 2 overvoltage | 2427h | P0 427 | 0 | Immediate |
| Positioning complete range | 2431h | P0 431 | 20 | Immediate |
| Positioning complete output setting | 2432h | P0 432 | 1 | Immediate |
| INP positioning delay time | 2433h | P0 433 | 0 | Immediate |
| Zero speed | 2434h | P0 434 | 50 | Immediate |
| Velocity coincidence range | 2435h | P0 435 | 50 | Immediate |

| | | | | |
|---|---|---|---|---|
| Arrival velocity | 2436h | P0 436 | 1000 | Immediate |
| Motor power-off delay time | 2437h | P0 437 | 100 | Immediate |
| Delay time for holding brake release | 2438h | P0 438 | 0 | Immediate |
| Holding brake activation velocity | 2439h | P0 439 | 30 | Immediate |
| Emergency stop function | 2443h | P0 443 | 0 | Immediate |

| Label | EtherCAT Address | Panel display | Default | Activation |
|---|---|---|---|---|
| 2nd pulse count per revolution | 2500h | P0 500 | 10000 | Restart |
| Driver prohibition input settings | 2504h | P0 504 | 0 | Immediate |
| Servo-off mode | 2506h | P0 506 | 0 | After restart |
| Main power-off detection time | 2509h | P0 509 | 50 | Immediate |
| Servo-off due to alarm mode | 2510h | P0 510 | 0 | After restart |
| Servo braking torque setting | 2511h | P0 511 | 0 | Immediate |
| Overload level setting | 2512h | P0 512 | 0 | Immediate |
| Overspeed level settings | 2513h | P0 513 | 0 | Immediate |
| I/O digital filter | 2515h | P0 515 | 10 | Immediate |
| Counter clearing input mode | 2517h | P0 517 | 3 | Immediate |
| Position unit settings | 2520h | P0 520 | 2 | After restart |
| Torque limit selection | 2521h | P0 521 | 0 | Immediate |
| 2nd torque limit | 2522h | P0 522 | 300 | Immediate |
| LED initial status | 2528h | P0 528 | 34 | After restart |
| Max. command pulse input frequency | 2532h | P0 532 | 4100 | Immediate |
| Torque limit detection time during torque initialization | 2537h | P0 537 | 500 | Immediate |
| 3rd torque limit | 2539h | P0 539 | 80 | Immediate |
| D41 set value | 2540h | P0 540 | 0x30C | Immediate |
| Frequency divider output – Z-signal polarity | 2542h | P0 542 | 0 | After restart |
| Frequency divider output – Z-signal width | 2543h | P0 543 | 0 | After restart |
| Frequency divider output source | 2544h | P0 544 | 0 | After restart |
| External encoder overspeed feedback threshold | 2545h | P0 545 | 0 | Immediate |
| Vent overload level | 2546h | P0 546 | 0 | Immediate |
| Magnetic flux identified distance limit | 2558h | P0 558 | 0 | Immediate |

| Label | EtherCAT Address | Panel display | Default | Activation |
|---|---|---|---|---|
| Encoder zero position compensation | 2601h | P0 601 | 0 | After restart |

| | | | | |
|---|---|---|---|---|
| JOG trial run torque command | 2603h | P0 603 | 350 | Immediate |
| JOG trial run velocity command | 2604h | P0 604 | 30 | Immediate |
| Position 3rd gain valid time | 2605h | P0 605 | 0 | Immediate |
| Position 3rd gain scale factor | 2606h | P0 606 | 100 | Immediate |
| Torque command additional value | 2607h | P0 607 | 0 | Immediate |
| Positive direction torque compensation value | 2608h | P0 608 | 0 | Immediate |
| Negative direction torque compensation value | 2609h | P0 609 | 0 | Immediate |
| Current response settings | 2611h | P0 611 | 100 | Immediate |
| Max. time to stop after disabling | 2614h | P0 614 | 500 | Immediate |
| Trial run distance | 2620h | P0 620 | 10 | Immediate |
| Trial run waiting time | 2621h | P0 621 | 300 | Immediate |
| No. of trial run cycles | 2622h | P0 622 | 5 | Immediate |
| Trial run acceleration | 2625h | P0 625 | 200 | Immediate |
| Velocity observer gain | 2628h | P0 628 | 0 | Immediate |
| Velocity observer bandwidth | 2629h | P0 629 | 0 | Immediate |
| Frame error window time | 2634h | P0 634 | 100 | Immediate |
| Frame error window | 2635h | P0 635 | 50 | Immediate |
| Absolute value rotation mode denominator setting | 2654h | P0 654 | 0 | After restart |
| Rotor blocked torque limit threshold | 2656h | P0 656 | 300 | Immediate |
| Blocked rotor alarm delay time | 2657h | P0 657 | 400 | Immediate |
| Homing mode position deviation threshold | 2659h | P0 659 | 8 | Immediate |
| Z-signal sustaining time | 2661h | P0 661 | 10 | Immediate |
| Absolute multiturn data upper limit | 2663h | P0 663 | 0 | After restart |
| Clash detection mode | 2680h | P0 680 | 0 | Immediate |
| Clash detection positive current threshold | 2681h | P0 681 | 100 | Immediate |
| Clash detection negative current threshold | 2682h | P0 682 | 100 | Immediate |
| Clash detection velocity threshold | 2683h | P0 683 | 0 | Immediate |
| Maintain current after positive direction clash | 2684h | P0 684 | 0 | Immediate |

| | | | | |
|---|---|---|---|---|
| Maintain current after negative direction clash | 2685h | P0 685 | 0 | Immediate |
| Positive direction clash detection starting position | 2686h | P0 686 | 0 | Re-enable |
| Negative direction clash detection starting position | 2687h | P0 687 | 0 | Re-enable |
| Clash detection positive current filter coefficient | 2688h | P0 688 | 0 | Immediate |
| Clash detection negative current filter coefficient | 2689h | P0 689 | 0 | Immediate |
| Clash detection time | 2690h | P0 690 | 0 | Immediate |

| Label | EtherCAT Address | Panel display | Default | Activation |
|---|---|---|---|---|
| Current loop gain | - | P0 700 | 1000 | Immediate |
| Current Loop Integral Time | - | P0 701 | 500 | Immediate |
| Motor rotor initial angle compensation | - | P0 702 | 330 | After restart |
| Current differential coefficient | - | P0 703 | 0 | Immediate |
| Motor model | - | P0 715 | 0x200 | After restart |
| Encoder model | - | P0 716 | *Encoder* | After restart |
| Encoder index compensation angle | - | P0 718 | 330 | After restart |
| External grating ruler precision | - | P0 754 | 100 | After restart |
| Magnetic Pole Spacing | - | P0 755 | 1200 | After restart |
| Motor temperature sensor type | - | P0 756 | 0 | After restart |
| Motor over temperature threshold | - | P0757 | 0 | Immediate |
| Encoder communication protocol | - | P0 760 | 0 | Immediate |
| BISS-C encoder single turn | - | P0 777 | 32 | After restart |
| BISS-C encoder multi turn | - | P0 778 | 0 | After restart |
| BISS-C encoder communication rate | - | P0 779 | 100 | After restart |
| BISS-C encoder terminal polarity | - | P0 780 | 0x0 | After restart |
| Motor Zero Position Single Turn Position | - | P0 783 | 0 | After restart |

| Label | EtherCAT Address | Panel display | Default | Activation |
|---|---|---|---|---|
| Position comparison | 27A4-01 | P0 C00 | 0 | Immediate |
| Position comparison mode | 27A4-02 | P0 C01 | 0 | Immediate |
| Position comparison pulse output bandwidth | 27A4-03 | P0 C02 | 0.1ms | Immediate |
| Position comparison output delay offset | 27A4-04 | P0 C03 | 0 | After restart |
| Position comparison starting point | 27A4-05 | P0 C04 | 1 | Immediate |
| Position comparison end point | 27A4-06 | P0 C05 | 1 | Immediate |
| No. of cycles for N cycle comparison | 27A4-07 | P0 C06 | 1 | Immediate |
| Position comparison – Set current position as origin | 27A4-08 | P0 C07 | 0 | Immediate |
| Position comparison - offset to origin | 27A4-09 | P0 C08 | 0 | Immediate |
| Position comparison 1 target value | 27A4-01 | P0 C00 | 0 | Immediate |
| Position comparison 1-42 target value | 27A4-15 – 27A4-3E | P0 C20 - P0 C61 | 0 | Immediate |
| Position comparison 1 & 2 attributes value | 27A4-47 | P0 C70 | 0 | Immediate |
| Position comparison x & y attribute value | 27A4- | P0 C75 - P0 C94 | 0 | Immediate |

## 3.1.2 Manufacturer parameter

| Index | Sub index | Label | Unit | Default | Min | Max |
|---|---|---|---|---|---|---|
| 5004 | 01 | RPDO length | | 8 | 0 | 64 |
| | 02 | TPDO length | | 17 | 0 | 64 |
| | 03 | The number of RPDO | | 1 | 0 | 4 |
| | 04 | The number of TPDO | | 1 | 0 | 2 |
| | 05 | Sync0 Watchdog counter | | 0 | 0 | 65535 |
| | 06 | Reserved | | | 0 | 65535 |
| | 07 | Sync0 Watchdog limit | | 4 | 0 | 65535 |
| | 08 | Sync0 Drift watchdog counter | | 0 | 0 | 65535 |
| | 09 | Sync0 Drift watchdog limit | | 4 | 0 | 65535 |
| | 0A | SM2 watchdog counter | | 0 | 0 | 65535 |
| | 0B | SM2 Watchdog limit | | 4 | 0 | 65535 |
| | 0C | Application layer SM2/Sync0 watchdog counter | | 0 | | |

| | | | | | | |
|---|---|---|---|---|---|---|
| | 0D | Application layer SM2/Sync0 watchdog limit | | 4 | | |
| | 0E | Reserved | | | 0 | 500 |
| | 0F | Time interval between SM2 and Sync0 | ns | 0 | 0 | 1000000000 |
| 5006 | 00 | Synchronous alarm setting | | 0xFFFF | 0 | 0xFFFF |
| 5010 | 00 | PDO watchdog overtime | ms | 0 | 0 | 60000 |
| 5012 | 04 | Homing setting | - | 5 | | |
| 5400 | 01 | Set synchronization cycle minimum value | us | 250 | 125 | 1000 |
| 5400 | 02 | Set synchronization cycle maximum value | us | 10000 | 4000 | 20000 |
| 5500 | 01 | Absolute encoder multiturn number | r | - | - | - |
| | 02 | Encoder single turn position | Pulse | - | - | - |
| | 03 | Encoder feedback position 32 bit low | Pulse | - | - | - |
| | 04 | Encoder feedback position 32 bit high | Pulse | - | - | - |
| | 05 | The actual mechanical position 32 bit low | Unit | - | - | - |
| | 06 | The actual mechanical position 32 bit high | Unit | - | - | - |
| | 07 | Number of encoder communication exceptions | | - | - | - |
| 5501 | 01 | Motor Speed | r/min | - | - | - |
| | 02 | Speed of position command | r/min | - | - | - |
| | 03 | Speed command | r/min | - | - | - |
| | 04 | Actual torque | 0.1% | - | - | - |
| | 05 | Torque command | 0.1% | - | - | - |
| | 06 | Relative position error | Pulse | - | - | - |
| | 07 | Internal position command | Pulse | - | - | - |
| | 08 | Overload ratio | 0.1% | - | - | - |
| | 09 | Discharge load rate | 0.1% | - | - | - |
| | 0A | Inertia ratio | % | - | - | - |
| | 0B | Actual positive torque limit value | 0.1% | - | - | - |
| | 0C | Actual negative torque limit value | 0.1% | - | - | - |
| | 0D | U phase current detect value | 0.1% | - | - | - |
| | 0E | W phase current detect value | 0.1% | - | - | - |
| 5502 | 01 | DI input signal | - | - | - | - |
| | 02 | SO output signal | - | - | - | - |
| | 03 | Reserved | - | - | - | - |
| | 04 | Reserved | - | - | - | - |
| | 05 | Bus voltage | V | - | - | - |
| | 06 | Temperature | ℃ | - | - | - |

| | | | | | | |
|---|---|---|---|---|---|---|
| | 07 | Power on time | S | - | - | - |

### 3.1.3 Motion parameter starting with object dictionary 6000

| Index | Sub-index | Label | Unit | Default |
|---|---|---|---|---|
| 603F | 0 | Error code | - | 0x0 |
| 6040 | 0 | Control word | - | 0x0 |
| 6041 | 0 | Status word | - | 0x0 |
| 605A | 0 | Quick stop option code | - | 2 |
| 605B | 0 | Shutdown Option Code | - | 0 |
| 605C | 0 | Disable Operation Option Code | - | 0 |
| 605D | 0 | Halt Option Code | - | 1 |
| 605E | 0 | Fault Reaction Option Code | - | 0 |
| 6060 | 0 | Mode of Operation | - | 8 |
| 6061 | 0 | Mode of Operation display | - | 0 |
| 6062 | 0 | Position Demand Value | Command unit | 0 |
| 6063 | 0 | Position Actual Internal Value | Encoder unit | 0 |
| 6064 | 0 | Position Actual Value | Command unit | - |
| 6065 | 0 | Follow Error Window | Command unit | 30000 |
| 6066 | 0 | Follow Error Time Out | ms | 10 |
| 6067 | 0 | Position window | Command unit/s | 0 |
| 6068 | 0 | Position window time | ms | 0 |
| 606B | 0 | Velocity Demand Value | Command unit/s | 0 |
| 606C | 0 | Velocity Actual Value | Command unit/s | 0 |
| 606D | 0 | Velocity window | Command unit /s | 10 |
| 606E | 0 | Velocity window time | ms | 0 |
| 606F | 0 | Velocity Threshold | Command unit/s | 10 |
| 6070 | 0 | Velocity Threshold Time | ms | 100 |
| 6071 | 0 | Target torque | 0.001 | 0 |
| 6072 | 0 | Maximum torque | 0.001 | 3000 |
| 6073 | 0 | Maximum current | 0.001 | 3000 |
| 6074 | 0 | Torque Demand | 0.001 | 0 |
| 6075 | 0 | Motor Rated Current | mA | 3000 |
| 6076 | 0 | Motor Rated Torque | mN.m | 0 |
| 6077 | 0 | Torque Actual Value | 0.1% | 0 |
| 6078 | 0 | Current Actual Value | 0.1% | 0 |
| 6079 | 0 | DC Link Circuit Voltage | mV | 0 |

| | | | | |
|---|---|---|---|---|
| 607A | 0 | Target position | Command unit | 0 |
| 607C | 0 | Home Offset | Command unit | 0 |
| 607D | 1 | Min Position Limit | Command unit | 0 |
| | 2 | Max Position Limit | Command unit | 0 |
| 607E | 0 | Polarity | - | 0x0 |
| 607F | 0 | Max Profile Velocity | Command unit /s | 2147483647 |
| 6080 | 0 | Max Motor Speed | r/min | 6000 |
| 6081 | 0 | Profile velocity | Command unit /s | 10000 |
| 6083 | 0 | Profile acceleration | Command unit /s² | 10000 |
| 6084 | 0 | Profile deceleration | Command unit /s² | 10000 |
| 6085 | 0 | Quick Stop Deceleration | Command unit /s² | 10000000 |
| 6087 | 0 | Torque slope | 0.001/s | 5000 |
| 608F | 1 | Encoder Increments | Encoder unit | 0 |
| 6091 | 1 | Motor Revolutions | r | 1 |
| | 2 | Shaft Revolutions | r | 1 |
| 6092 | 1 | Feed | Command unit/r | 10000 |
| 6098 | 0 | Homing method | - | 19 |
| 6099 | 1 | Speed During Search For Switch | Command unit /s | 10000 |
| | 2 | Speed During Search For Zero | Command unit /s | 5000 |
| 609A | 0 | Homing acceleration | Command unit /s² | 500000 |
| 60B0 | 0 | Position Offset | Command unit | 0 |
| 60B1 | 0 | Velocity Offset | Command unit /s | 0 |
| 60B2 | 0 | Torque Offset | 0.001 | 0 |
| 60B8 | 0 | Touch Probe function | - | 0x0 |
| 60B9 | 0 | Touch Probe status | - | 0x0 |
| 60BA | 0 | Touch Probe 1 Positive Position | Command unit | 0 |
| 60BB | 0 | Touch Probe 1 Negative Position | Command unit | 0 |
| 60BC | 0 | Touch Probe 2 Positive Position | Command unit | 0 |
| 60BD | 0 | Touch Probe 2 Negative Position | Command unit | 0 |
| 60C5 | 0 | Max Acceleration | Command unit /s² | 100000000 |
| 60C6 | 0 | Max Deceleration | Command unit /s² | 100000000 |

| | | | | |
|---|---|---|---|---|
| 60D5 | 0 | Touch Probe 1 Positive Edge Counter | - | 0 |
| 60D6 | 0 | Touch Probe 1 Negative Edge Counter | - | 0 |
| 60D7 | 0 | Touch Probe 2 Positive Edge Counter | - | 0 |
| 60D8 | 0 | Touch Probe 2 Negative Edge Counter | - | 0 |
| 60E0 | 0 | Positive Torque Limit | 0.001 | 3000 |
| 60E1 | 0 | Negative Torque Limit | 0.001 | 3000 |
| 60F4 | 0 | Following Error Actual Value | Command unit | 0 |
| 60FA | 0 | Control Effort | Command unit /s | 0 |
| 60FC | 0 | Position Demand Internal Value | Encoder unit | 0 |
| 60FD | 0 | Digital Inputs | - | 0x0 |
| 60FE | 1 | Physical Outputs | - | 0x0 |
| | 2 | Bit Mask | - | 0x0 |
| 60FF | 0 | Target velocity | Command unit /s | 0 |
| 6502 | 0 | Supported Drive Modes | - | 0x0 |

## 3.2 Parameter Function

- Panel Display as follows:

- Parameter valid under following modes
  CSP: Cyclic synchronous position mode
  CSV: Cyclic synchronous velocity mode
  CST: Cyclic synchronous torque mode
  HM: Homing mode
  PP: Profile position mode
  PV: Profile velocity mode
  PT: Profile torque mode
  F: All modes

### 3.2.1【Class 0】Basic Settings

| P00.00 | Label | Model-following bandwidth | Mode | F | | |
|---|---|---|---|---|---|---|
| | Range | 0~5000 | Default | 1 | Unit | 0.1Hz |
| | Activation | Immediate | | | Index | 2000h |

Model-following bandwidth, also known as model-following control (MFC), is used to control the position loop to improve the responsiveness to commands, speed up positioning time and reduce following error. The effect is obvious especially in low and medium mechanical stiffness. Use mainly for MFC or ZTC tuning.

| Value | Description |
|---|---|
| 0 | Disable the function. |
| 1 | Enable the function to set bandwidth automatically, recommended for most applications. P00.00=P01.01 |
| 2 | Reserved |
| 3-9 | Invalid |

P00.00>9: Model-following bandwidth value set by P00.00.
10<Pr0.00<5000: Specifies the bandwidth.
**Recommended settings for belt application: 30<P00.00<100.*

| P00.01 | Label | Control Mode Settings | Mode | F | | |
|---|---|---|---|---|---|---|
| | Range | 0~9 | Default | 9 | Unit | - |
| | Activation | After restart | | | Index | 2001h |

Set value to use following control modes：

| Value | Content | Details |
|---|---|---|
| 0-8 | Reserved | Reserved |
| 9 | EtherCAT mode | PP/PV/PT/HM/CSP/CSV/CST |

| P00.02 | Label | Real time Auto Gain Adjusting | Mode | F | | |
|---|---|---|---|---|---|---|
| | Range | 0x0~0xFFF | Default | 0x001 | Unit | — |
| | Activation | Immediate | | | Index | 2002h |

Set up the mode of the real time auto gain adjusting.

| Data bits | Category | Settings | Application |
|---|---|---|---|
| 0x00_ | Motion setting mode | Used to set motion setting mode, which can be selected according to the motion characteristics or setting requirements. Generally, it is recommended to select mode 1 with good generality when there is no special requirement, mode 2 when rapid positioning is needed If mode 1 and mode 2 cannot meet the requirements, please choose mode 0. | |
| | | 0:Manual | P00.03 invalid. Gain value must be adjusted manually and accordingly. |
| | | 1:Standard | P00.03 valid. Quick gain adjusting can be achieved by changing P00.03 stiffness value. Gain switching is not used in this mode, suitable for applications with requirements for stability. |
| | | 2:Positioning | P00.03 valid. Quick gain adjusting can be achieved by changing P00.03 stiffness value. This mode is suitable for applications requiring quick positioning. Not recommended for load mounted vertical to ground, or please compensate for the load using P06.07 |
| 0x0_0 | Load type setting | Used to select the load type, choose according to load-inertia ratio and mechanical structure. | |
| | | 0: Rigid structure | This mode prioritizes system responsiveness. Use this mode when there is a relatively rigid structure with low load inertia. Typical application including directly connected high-precision gearbox, lead screw, gears, etc. |
| | | 1:High inertia | For applications with higher load inertia (10 times or above), gain settings take into account both machine stability and responsiveness. Not recommended to set stiffness above 15 for high load inertia. |
| | | 2: Flexible structure | This mode prioritizes system stability. Use this mode when there is low rigidity structure with high load inertia. Typical applications included belts and chains. |
| 0x_00 | *Reserved* | | |

The setting type combination is a hexadecimal standard, as follows:

| Setting type combination | Application type |
|---|---|
| 0X000 | Rigid structure + Manual |
| 0X001 | Rigid structure +Standard |
| 0X002 | Rigid structure +Positioning |
| 0X010 | High inertia + Manual |
| 0X011 | High inertia + Standard |
| 0X012 | High inertia + Positioning |
| 0X020 | Flexible structure + Manual |
| 0X021 | Flexible structure +Standard |
| 0X022 | Flexible structure +Positioning |

| P00.03 | Label | Real time auto stiffness adjusting | Mode | F | | |
|---|---|---|---|---|---|---|
| | Range | 50 ~ 81 | Default | 70 | Unit | — |
| | Activation | Immediate | | | Index | 2003h |

Valid when P00.03 = 1,2

Low ⟶ Mechanical stiffness ⟵ High

Low ⟶ Servo gain ⟵ High

81.80·····70.69.68·····51.50

Low ⟶ Responsiveness ⟵ High

- Lower values ensure better system responsiveness and mechanical stiffness but machine vibration might occur, please set accordingly. Please stop the motor before doing any changes to the stiffness settings.
- When P00.02 = 0x010, please set stiffness level to around 65.

| P00.04 | Label | Inertia ratio | Mode | F | | |
|---|---|---|---|---|---|---|
| | Range | 0~20000 | Default | 250 | Unit | % |
| | Activation | Immediate | | | Index | 2004h |

**P00.04=( load inertia/motor rotational inertia)×100%**

Set inertia ratio according to actual load inertia. When both are uniform, actual motor velocity loop responsiveness and gain settings will be consistent. If inertia ratio is greater than actual value, velocity loop gain settings will be higher and vice versa. For motor with high inertia, P00.04 can be left unfilled but optimal setting of P00.04 could improve system performance.

| P00.06 | Label | Command polarity inversion | Mode | F | | |
|---|---|---|---|---|---|---|
| | Range | 0 ~ 1 | Default | 0 | Unit | — |
| | Activation | After restart | | | Index | 2006h |

Used to change the rotational direction of the motor.

| Set value | Details |
|---|---|
| 0 | Polarity of the command is not inversed. The direction of rotation is consistent with the polarity of command. |
| 1 | Polarity of command is inversed. The direction of rotation is opposite to the polarity of command. |

Note: Rotational direction of the motor is recommended to be set through object dictionary 607E. However, P00.06 has higher priority than object dictionary 607E. 607E only takes effect when P00.06 = 0.

| P00.07 | Label | Probe signal polarity settings | Mode | F | | |
|---|---|---|---|---|---|---|
| | Range | 0 ~ 3 | Default | 3 | Unit | — |
| | Activation | After restart | | | Index | 2007h |

Probe signal polarity settings take effect when P00.01 = 9

| Set value | Details |
|---|---|
| 0 | Probe 1 & 2 polarity inversion |
| 1 | Probe 2 polarity inversion |
| 2 | Probe 1 polarity inversion |
| 3 | No polarity inversion for probe 1 & 2 |

If P00.01 ≠ 9, P00.07 = Command pulse input mode settings.

**Command pulse input**

| Command Polarity inversion (P00.06) | Command pulse input mode settings (P00.07) | Command Pulse Mode | Positive signal | Negative signal |
|---|---|---|---|---|
| 【0】 | 0 *or* 2 | 90°phase difference 2 phase pulse （Phase A+ Phase B） | 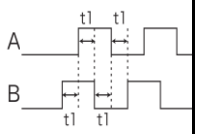 | 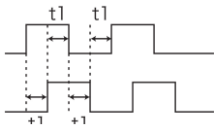 |
| | 1 | CW pulse sequence ＋ CCW pulse sequence | 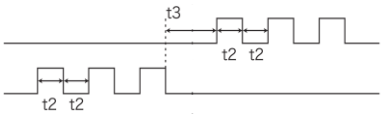 | |
| | 【3】 | Pulse sequence ＋ Directional symbol | 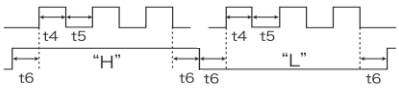 | |
| 1 | 0 *or* 2 | 90°phase difference 2 phase pulse （Phase A＋Phase B） | 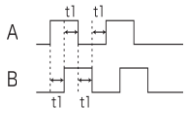 | 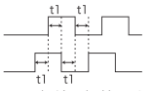 |
| | 1 | CW pulse sequence ＋ CCW pulse sequence | 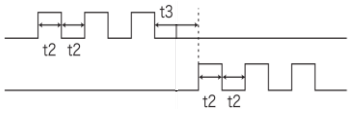 | |
| | 3 | Pulse sequence ＋ Directional symbol | 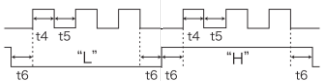 | |

**Command pulse input signal max. frequency and min. duration needed**

| Command pulse input interface | | Max. Frequency | Min. duration needed（μs） | | | | | |
|---|---|---|---|---|---|---|---|---|
| | | | t1 | t2 | t3 | t4 | t5 | t6 |
| Pulse sequence interface | Differential | 500 kHz | 2 | 1 | 1 | 1 | 1 | 1 |
| | Open collector | 200 kHz | 5 | 2.5 | 2.5 | 2.5 | 2.5 | 2.5 |

Please set >0.1μs for the duration between rising and falling edge of command pulse input signal.

1 revolution with 2500 pulses 2-phase pulse input when P00.07=0 or 2, P00.08 = 10000;

1 revolution with 10000 pulses 1-phase pulse input when P00.07=1 or 3, P00.08 = 10000

| P00.08 | Label | Command pulse count per revolution | Mode | F | | |
|---|---|---|---|---|---|---|
| | Range | 0~8388608 | Default | 0 | Unit | P- |
| | Activation | After restart | | | Index | 2008h |
| | Pulses per revolution can be set using object dictionary 608F, 6091, 6092. However, P00.08 has higher priority. | | | | | |

| PR0.09 | Label | 1st command frequency multiplier numerator | Mode | F | | |
|---|---|---|---|---|---|---|
| | Range | 0~2147483647 | Default | 1 | Unit | - |
| | Activation | Immediate | | | Index | 2009h |
| | Mirroring object dictionary 6091-01, changing this parameter will also modify the value of object dictionary 6091-01.<br>Valid when Pr0.08 = 0. | | | | | |

| PR0.10 | Label | Command frequency divider denominator | Mode | F | | |
|---|---|---|---|---|---|---|
| | Range | 0~2147483647 | Default | 1 | Unit | - |
| | Activation | Immediate | | | Index | 2010h |
| | Mirroring object dictionary 6091-02, changing this parameter will also modify the value of object dictionary 6091-02.<br>Valid when Pr0.08 = 0. | | | | | |

| P00.11 | Label | Encoder pulse output per revolution | Mode | F | | |
|---|---|---|---|---|---|---|
| | Range | 0~65535 | Default | 2500 | Unit | P/r |
| | Activation | After restart | | | Index | 2011 |
| | Including rising and falling edge of encoder phase A and B,<br>encoder actual differential output pulse count = P00.011 x 4<br>Please make sure: Motor rotational speed x P00.11 x 4≤1MHz. If exceeds, alarm Er280 might occur. | | | | | |

| P00.12 | Label | Pulse output logic inversion | Mode | F | | |
|---|---|---|---|---|---|---|
| | Range | 0~1 | Default | 0 | Unit | - |
| | Activation | After restart | | | Index | 2012 |

To set phase B logic and output source from encoder pulse output. To inverse B-Phase pulse logic and change the phase relation between Phase A and Phase B

**Pulse output logic inversion**

| P00.12 | Phase B logic | CW direction | CCW direction |
|---|---|---|---|
| [0] | Not inverted | 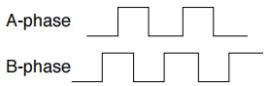 | 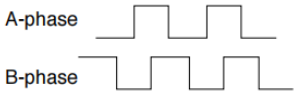 |
| [1] | Inverted | 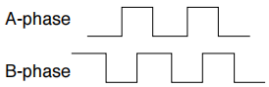 | 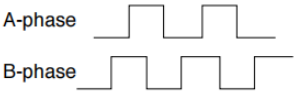 |

| P00.13 | Label | 1st Torque Limit | Mode | F | | |
|---|---|---|---|---|---|---|
| | Range | 0~500 | Default | 300 | Unit | % |
| | Activation | Immediate | | | Index | 2013h |

1st torque limit is set according to ratio percentage of motor rated current. Do not exceed max driver output current.
Actual torque limit is the smaller value of P00.13 and object dictionary 6072

| P00.14 | Label | Excessive Position Deviation Settings | Mode | PP | HM | CSP |
|---|---|---|---|---|---|---|
| | Range | 0~500 | Default | 30 | Unit | 0.1rev |
| | Activation | Immediate | | | Index | 2014h |

Please set threshold value for position deviation accordingly. Default factory setting = 30, Er180 will be triggered if positive deviation is in excess of 3 revolutions.

| P00.15 | Label | Absolute Encoder settings | Mode | PP | HM | CSP |
|---|---|---|---|---|---|---|
| | Range | 0~32767 | Default | 0 | Unit | - |
| | Activation | Immediate | | | Index | 2015h |

**0: Incremental mode**:
Used as an incremental encoder. Doesn't retain position data on power off. Unlimited travel distance.

**1: Multiturn linear mode**:
Used as a multiturn absolute encoder. Retrain position data on power off. For applications with fixed travel distance and no multiturn data overflow.

**2: Multiturn rotary mode**:
Used as a multiturn absolute encoder. Retrain position data on power off. Actual data feedback in between 0-(P06.63). Unlimited travel distance.

**3: Single turn absolute mode:**
Used when travel distance is within 1 revolution of the encoder. Data overflow will trigger alarm.

**5:** Clear multiturn alarm and activate multiturn absolute function. Will switch to multiturn mode once alarm cleared, if remains at 5 after 3s, please solve according to Er153.

**9:** Clear multiturn position, reset multiturn alarm and activate multiturn absolute function. Will switch to multiturn mode once alarm cleared, if remains at 9 after 3s, please

solve according to Er153. ***Please disable axis before setting to 9 and home the axis before using.***

| | | | | | | |
|---|---|---|---|---|---|---|
| **P00.17** | **Label** | Regenerative resistor power rating | **Mode** | **F** | | |
| | **Range** | 20~5000 | **Default** | 50 | **Unit** | W |
| | **Activation** | Immediate | | | **Index** | 2017h |

To set power rating of regenerative resistor.

| Drive | Resistance(Ω) | Power Rating(W) |
|---|---|---|
| ELD3-EC7001BM | 10 | 100 |
| ELD3-EC7005BM | 10 | 100 |
| ELD3-EC7010BM | 10 | 100 |
| ELD3-EC7020BM | 10 | 100 |

P00.16 and P00.17 determines the threshold value of Er 120. Please set accordingly or it might trigger false alarm or damage to servo driver.

*Note: If external regenerative resistor is used, please set according to its labeled power rating.*

| | | | | | | |
|---|---|---|---|---|---|---|
| **P00.19** | **Label** | Friction compensation setting | **Mode** | **F** | | |
| | **Range** | 0~1000 | **Default** | 0 | Unit | - |
| | **Activation** | Immediate | | | Index | 2022h |

Friction compensation setting = 0, default = 1;

Friction compensation setting = x, indicating x+1/10000 of friction compensation runway;

| | | | | | | |
|---|---|---|---|---|---|---|
| **P00.23** | **Label** | EtherCAT slave ID | **Mode** | **F** | | |
| | **Range** | 0~32767 | **Default** | 2 | **Unit** | - |
| | **Activation** | After restart | | | **Index** | 2023h |

Set ID number of the slave station under EtherCAT mode

| | | | | | | |
|---|---|---|---|---|---|---|
| **P00.24** | **Label** | Source of slave ID | **Mode** | **F** | | |
| | **Range** | 0~1 | **Default** | 1 | **Unit** | - |
| | **Activation** | After restart | | | **Index** | 2024h |

0: Master device automatically assigns a slave address.

1：The slave ID = P00.23

| | | | | | | |
|---|---|---|---|---|---|---|
| **P00.25** | **Label** | Synchronous compensation time 1 | **Mode** | **CSP** | | |
| | **Range** | 1~100 | **Default** | 10 | **Unit** | 0.1us |
| | **Activation** | After restart | | | **Index** | 2025h |

Synchronous dithering compensation range. Used for master device with poor synchronization.

| P00.26 | Label | Synchronous compensation time 2 | Mode | CSP | | |
|---|---|---|---|---|---|---|
| | Range | 1~2000 | Default | 50 | Unit | 0.1us |
| | Activation | After restart | | | Index | 2026h |
| | Synchronous dithering compensation range. Used for master device with poor synchronization. | | | | | |

| P00.27 | Label | Synchronization mode command delay cycle counts | Mode | CSP | | |
|---|---|---|---|---|---|---|
| | Range | 1~50 | Default | 0 | Unit | - |
| | Activation | After restart | | | Index | 2027h |
| | Driver delays N position loop cycle counts to receive position command from master device. To solve motor jitter caused by master device with poor synchronization. | | | | | |

| P00.28 | Label | CSP mode safe self-running position setting | Mode | CSP | | |
|---|---|---|---|---|---|---|
| | Range | 0~10000 | Default | 10 | Unit | - |
| | Activation | Immediate | | | Index | 2028h |
| | Synchronous dithering compensation range. Used for master device with poor synchronization. | | | | | |

| P00.30 | Label | Encoder feedback mode | Mode | F | | |
|---|---|---|---|---|---|---|
| | Range | 0~1 | Default | 0 | Unit | - |
| | Activation | Immediate | | | Index | 2030h |

To set encoder feedback source.

| Set value | Description |
|---|---|
| 【0】 | Feedback from motor（Internal）encoder |
| 1 | Use under full closed loop control, external encoder feedback |

| P00.31 | Label | External encoder type | Mode | F | | |
|---|---|---|---|---|---|---|
| | Range | 0~3 | Default | 0 | Unit | - |
| | Activation | Immediate | | | Index | 2031h |

| Set value | Description |
|---|---|
| 【0】 | ABZ encoder |
| 1~3 | *Reserved for future upgrades* |

| P00.32 | Label | External encoder direction | Mode | F | | |
|---|---|---|---|---|---|---|
| | Range | 0~1 | Default | 0 | Unit | - |
| | Activation | Immediate | | | Index | 2023h |

| Set value | Description |
|---|---|
| 【0】 | Default direction |
| 1 | Inversed direction |

| P00.33 | Label | Excessive hybrid deviation | Mode | PP | HM | CSP |
|---|---|---|---|---|---|---|
| | Range | 0~134217728 | Default | 16000 | Unit | *Command* |
| | Activation | After restart | | | Index | 2033h |

To set the excessive hybrid deviation threshold value, please set accordingly. Use in full closed loop control. Factory default: 16000. Er191 might occur if position deviation during hybrid control exceeds 16000 pulse counts.

| P00.34 | Label | Clear hybrid control deviation | Mode | PP | HM | CSP |
|---|---|---|---|---|---|---|
| | Range | 0~100 | Default | 0 | Unit | R |
| | Activation | After restart | | | Index | 2034h |

To set condition to clear position deviation under hybrid control mode (Full closed loop)

| Set value | Description |
|---|---|
| 【0】 | OFF |
| 1~100 | Revolution count to clear hybrid control deviation |

| P00.35 | Label | External encoder frequency divider numerator | Mode | F | | |
|---|---|---|---|---|---|---|
| | Range | $0\sim2^{23}$ | Default | 0 | Unit | - |
| | Activation | After restart | | | Index | 2035h |

When P00.35 = 0, numerator = resolution of encoder

| P00.36 | Label | External encoder frequency divider denominator | Mode | F | | |
|---|---|---|---|---|---|---|
| | Range | $0\sim2^{23}$ | Default | 0 | Unit | - |
| | Activation | After restart | | | Index | 2036h |

When P00.37 = 0, External encoder feedback pulse count per revolution = P00.36

| P00.37 | Label | External encoder feedback pulse count per revolution | Mode | F | | |
|---|---|---|---|---|---|---|
| | Range | $0\sim2^{31}$ | Default | 0 | Unit | - |
| | Activation | After restart | | | Index | 2037h |

| Set value | Pulse count |
|---|---|
| 【0】 | P00.36 |
| $1\sim2^{31}$ | P00.37 |

| P00.38 | Label | Z-signal pulse input source | Mode | F | | |
|---|---|---|---|---|---|---|
| | Range | 0~3 | Default | 0 | Unit | - |
| | Activation | After restart | | | Index | 2038h |

| Set value | Bit 1 (Probe Z-signal) | Bit 0 (Homing Z-Signal) |
|---|---|---|
| 【0】 | Motor Z-signal | Motor Z-signal |
| 1 | Motor Z-signal | External encoder Z-signal |
| 2 | External encoder Z-signal | Motor Z-signal |
| 3 | External encoder Z-signal | External encoder Z-signal |

## 3.2.2【Class 1】Gain Adjustments

| P01.00 | Label | 1st position loop gain | Mode | PP | HM | CSP |
|---|---|---|---|---|---|---|
| | Range | 0~30000 | Default | 320 | Unit | 0.1/s |
| | Activation | Immediate | | | Index | 2100h |

Higher position loop gain value improves the responsiveness of the servo driver and lessens the positioning time.
Position loop gain value shouldn't exceed responsiveness of the mechanical system and take in consideration velocity loop gain, if not it might cause vibration, mechanical noise and overtravel.
As velocity loop gain is based on position loop gain, please set both values accordingly.
Recommended range: 1.2≤P01.00/P01.01≤1.8

| P01.01 | Label | 1st velocity loop gain | Mode | F | | |
|---|---|---|---|---|---|---|
| | Range | 1~32767 | Default | 180 | Unit | 0.1Hz |
| | Activation | Immediate | | | Index | 2101h |

To determine the responsiveness of the velocity loop. If inertia ratio of P00.04 is uniform with actual inertia ratio, velocity loop responsiveness = P01.01.
To increase position loop gain and improve responsiveness of the whole system, velocity loop gain must be set at higher value. Please notice that if the velocity loop gain is too high, it might cause vibration.

| P01.02 | Label | 1st Integral Time Constant of Velocity Loop | Mode | F | | |
|---|---|---|---|---|---|---|
| | Range | 1~10000 | Default | 310 | Unit | 0.1ms |
| | Activation | Immediate | | | Index | 2102h |

If auto gain adjusting function is not enabled, P01.02 is activated.
The lower the set value, the closer the lag error at stop to 0 but might cause vibration. If the value set is overly large, overshoot, delay of positioning time duration and lowered responsiveness might occur.
Set 10000 to deactivate P01.02.

Recommended range: 50000≤P01.01xP01.02≤150000

For example: Velocity loop gain P01.01=500(0.1Hz), which is 50Hz. Integral time constant of velocity loop should be 100(0.1ms)≤P01.02≤300(0.1ms)

| P01.03 | Label | 1st velocity detection filter | Mode | F | | |
|---|---|---|---|---|---|---|
| | Range | 1~10000 | Default | 15 | Unit | - |
| | Activation | Immediate | | | Index | 2103h |

This filter is a low pass filter. It blocks high frequencies which cause system instability from velocity feedback data. The higher the set value, lower frequencies will be blocked and velocity responsiveness will also be lowered. P01.03 needs to match velocity loop gain. Please refer to the following table.

| Value | Velocity Detection Filter Cut-off Frequency(Hz) | Value | Velocity Detection Filter Cut-off Frequency(Hz) |
|---|---|---|---|
| 0 | 2500 | 16 | 750 |
| 1 | 2250 | 17 | 700 |
| 2 | 2100 | 18 | 650 |
| 3 | 2000 | 19 | 600 |
| 4 | 1800 | 20 | 550 |
| 5 | 1600 | 21 | 500 |
| 6 | 1500 | 22 | 450 |
| 7 | 1400 | 23 | 400 |
| 8 | 1300 | 24 | 350 |
| 9 | 1200 | 25 | 300 |
| 10 | 1100 | 26 | 250 |
| 11 | 1000 | 27 | 200 |
| 12 | 950 | 28 | 175 |
| 13 | 900 | 29 | 150 |
| 14 | 850 | 30 | 125 |
| 【15】 | 800 | 31 | 100 |

| P01.04 | Label | 1st Torque Filter Time Constant | Mode | F | | |
|---|---|---|---|---|---|---|
| | Range | 0~2500 | Default | 126 | Unit | 0.01ms |
| | Activation | Immediate | | | Index | 2104h |

To set torque command low-pass filter, add a filter delay time constant to torque command and filter out the high frequencies in the command.
Often used to reduce or eliminate some noise or vibration during motor operation, but it will reduce the responsiveness of current loop, resulting in undermining velocity loop and position loop control. P01.04 needs to match velocity loop gain.
Recommended range: 1,000,000/(2π×P01.04) ≥P01.01×4

For example: Velocity loop gain P01.01=180(0.1Hz) which is 18Hz. Time constant of torque filter should be P01.01≤221(0.01ms)
If mechanical vibration is due to servo driver, adjusting P01.04 might eliminate the vibration. The smaller the value, the better the responsiveness but also subjected to machine conditions. If the value is too large, it might lower the responsiveness of current loop.
With higher P01.01 value settings and no resonance, reduce P01.04 value;
With lower P01.01 value settings, increase P01.04 value to lower motor noise.

| | | | | | | |
|---|---|---|---|---|---|---|
| **P01.05** | **Label** | 2nd Position Loop Gain | **Mode** | **PP** | **HM** | **CSP** |
| | **Range** | 0~30000 | **Default** | 380 | **Unit** | 0.1/s |
| | **Activation** | Immediate | | | **Index** | 2105h |
| **P01.06** | **Label** | 2nd velocity loop gain | **Mode** | **F** | | |
| | **Range** | 1~32767 | **Default** | 180 | **Unit** | 0.1Hz |
| | **Activation** | Immediate | | | **Index** | 2106h |
| **P01.07** | **Label** | 2nd Integral Time Constant of Velocity Loop | **Mode** | **F** | | |
| | **Range** | 1~10000 | **Default** | 10000 | **Unit** | 0.1ms |
| | **Activation** | Immediate | | | **Index** | 2107h |
| **P01.08** | **Label** | 2nd velocity detection filter | **Mode** | **F** | | |
| | **Range** | 1~31 | **Default** | 15 | **Unit** | - |
| | **Activation** | Immediate | | | **Index** | 2108h |
| **P01.09** | **Label** | 2nd Torque Filter Time Constant | **Mode** | **F** | | |
| | **Range** | 0~2500 | **Default** | 126 | **Unit** | 0.01ms |
| | **Activation** | Immediate | | | **Index** | 2109h |

Position loop, velocity loop, velocity detection filter, torque command filter each have 2 pairs of gain or time constant (1st and 2nd)

| | | | | | | |
|---|---|---|---|---|---|---|
| **P01.10** | **Label** | Velocity feed forward gain | **Mode** | **PP** | **HM** | **CSP** |
| | **Range** | 0~1000 | **Default** | 300 | **Unit** | 0.10% |
| | **Activation** | Immediate | | | **Index** | 2110h |

Used for decreasing following error caused by low responsiveness of velocity loop. Might cause overshoot or increase in noise if set value is too high.

| | | | | | | |
|---|---|---|---|---|---|---|
| **P01.11** | **Label** | Velocity feed forward filter time constant | **Mode** | **PP** | **HM** | **CSP** |
| | **Range** | 0~6400 | **Default** | 50 | **Unit** | 0.01ms |
| | **Activation** | Immediate | | | **Index** | 2111h |

Set velocity feed forward low pass filter to eliminate high or abnormal frequencies in velocity feed forward command. Often used when position command with low resolution or high electronic gear ration to smoothen velocity feed forward.
Position deviation under constant velocity can be lowered with higher velocity feed forward gain. Please to refer to the equation below.

$$\text{Position deviation[Uint]} = \frac{Set\ velocity[\frac{Uint}{s}]}{Position\ loop\ gain[Hz]}\ x\ \frac{100 - Velocity\ feed\ foward\ gain[\%]}{100}$$

| P01.12 | Label | Torque feed forward gain | Mode | PP | PV | HM | CSP | CSV |
|---|---|---|---|---|---|---|---|---|
| | Range | 0~1000 | Default | 0 | | Unit | 0.1% | |
| | Activation | Immediate | | | | Index | 2112h | |

Before using torque feed forward, please set correct inertia ratio P00.04. By increasing torque feed forward gain, position deviation on constant acceleration/deceleration can be reduced to close to 0. Under ideal condition and trapezoidal speed profile, position deviation of the whole motion can be reduced to close to 0. In reality, perturbation torque will always exist, hence position deviation can never be 0.

| P01.13 | Label | Torque feed forward filter time constant | Mode | PP | PV | HM | CSP | CSV |
|---|---|---|---|---|---|---|---|---|
| | Range | 0~6400 | Default | 0 | | Unit | 0.01ms | |
| | Activation | Immediate | | | | Index | 2113h | |

Low pass filter to eliminate abnormal or high frequencies in torque feed forward command. Usually used when encoder has lower resolution or precision.
Noise reduces if torque feed forward filter time constant is set higher but position deviation will increase at acceleration varied points.

| P01.15 | Label | Position control gain switching mode | Mode | F | | | |
|---|---|---|---|---|---|---|---|
| | Range | 0~11 | Default | 0 | | Unit | - |
| | Activation | Immediate | | | | Index | 2115h |

| Set Value | Condition | Gain switching condition |
|---|---|---|
| 0 | 1st gain fixed | Fixed on using 1st gain(P01.00-P01.04) |
| 1 | 2nd gain fixed | Fixed on using 2nd gain (P01.05-P01.09) |
| 2 | Reserved | |
| 3 | High set torque | Switch to 2nd gain when set torque command absolute value larger than (level + hysteresis)[%]<br>Switch to 1st gain when set torque command absolute value smaller than (level + hysteresis)[%]<br> 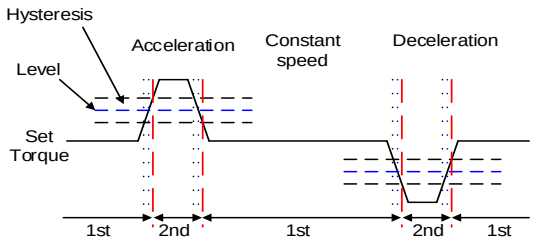 <br> |
| 4 | Reserved | Reserved |
| 5 | High set velocity | Valid for position and velocity control.<br>Switch to 2nd gain when set velocity command absolute value larger than (level + hysteresis)[r/min] |

| | | |
|---|---|---|
| | | 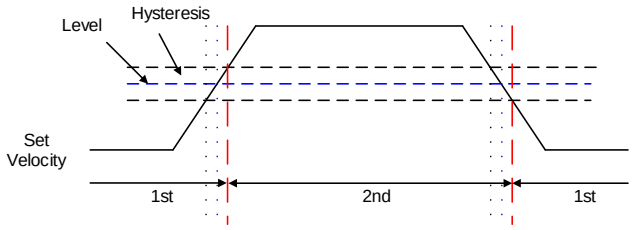 <br>Switch to 1st gain when set velocity command absolute value smaller than (level-hysteresis)[r/min] |
| 6 | Large position deviation | Valid for position control.<br>Switch to 2nd gain when position deviation absolute value larger than (level + hysteresis)[pulse]<br>Switch to 1st gain when position deviation absolute value smaller than (level-hysteresis)[pulse]<br> 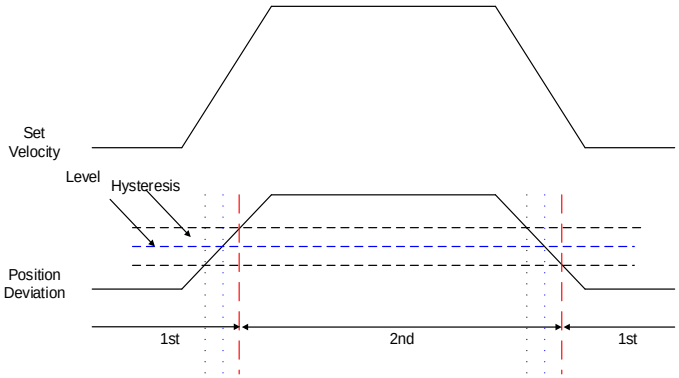 |
| 7 | Pending position command | Valid for position control.<br>Switch to 2nd gain if position command ≠ 0<br>Switch to 1st gain if position command **remains = 0** throughout the duration of delay time.<br> 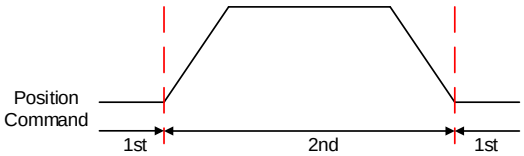 |
| 8 | Not yet in position | Valid for position control.<br>Switch to 2nd gain if position command is not completed.<br>Switch to 1st gain if position command **remains uncompleted** throughout the duration of delay time.<br> 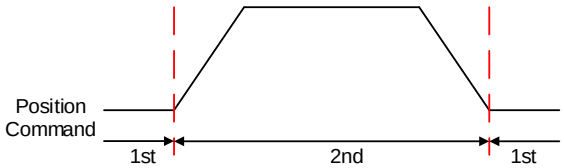 |
| 9 | High actual velocity | Valid for position control. |

| | | |
|---|---|---|
| | | 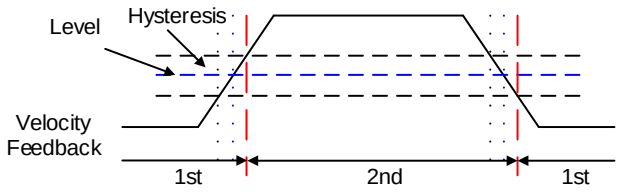 <br>Switch to 2nd gain when actual velocity absolute value larger than (level + hysteresis)[r/min]<br>Switch to 1st gain when actual velocity absolute value remains smaller throughout the duration of delay time than (level-hysteresis)[r/min] |
| 10 | Pending position command +actual velocity | Valid for position control.<br>Switch to 2nd gain if position command ≠ 0<br>Switch to 1st gain if positional command = 0 throughout the duration of delay time and absolute value of actual velocity remains smaller than (level - hysteresis) (r/min)<br> 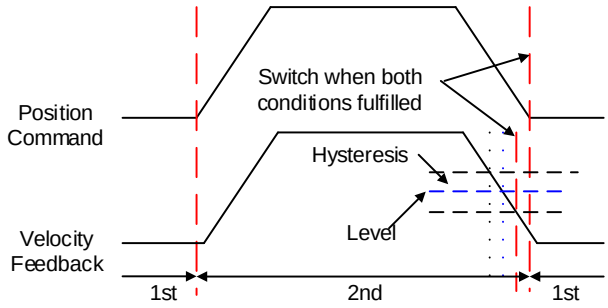 |

For position control mode, set P01.15=3,5,6,9,10;

For velocity control mode, set P01.15=3,5,9;

*** Above 'level' and 'hysteresis' are in correspondence to P01.17 Position control gain switching level and P01.18 Hysteresis at position control switching.*

| P01.17 | Label | Position control gain switching level | Mode | F | | |
|---|---|---|---|---|---|---|
| | Range | 0~20000 | Default | 50 | Unit | *As set* |
| | Activation | Immediate | | | Index | 2117h |

Set threshold value for gain switching to occur.
Unit is mode dependent.

| Switching condition | Unit |
|---|---|
| Position | Encoder pulse count |
| Velocity | RPM |
| Torque | % |

*Please set level ≥ hysteresis*

| P01.18 | Label | Hysteresis at position control switching | Mode | F | | |
|---|---|---|---|---|---|---|
| | Range | 0~20000 | Default | 33 | Unit | *As P01.17* |
| | Activation | Immediate | | | Index | 2118h |
| | To eliminate the instability of gain switching. Used in combination with P01.17 If level< hysteresis, drive will set internally hysteresis = level. | | | | | |

| P01.19 | Label | Position gain switching time | Mode | F | | |
|---|---|---|---|---|---|---|
| | Range | 0~10000 | Default | 33 | Unit | 0.1ms |
| | Activation | Immediate | | | Index | 2119h |

During position control, if 1st and 2nd gain difference is too large, to ease torque changes and vibration due to rapid changes in position loop gain, set suitable P01.19 value
For example: 1st (P01.00) <-> 2nd (P01.05)

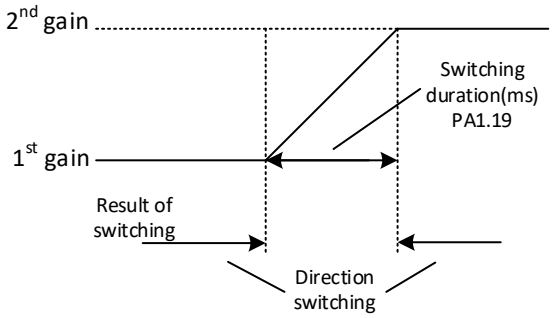


| P01.36 | Label | External ABZ encoder filter time | Mode | PP | | CSP |
|---|---|---|---|---|---|---|
| | Range | 0~300 | Default | 0 | Unit | 50ns |
| | Activation | Immediate | | | Index | 2136h |
| | To set filter time for external ABZ encoder | | | | | |

| P01.39 | Label | Unique registry 2 | Mode | F | | |
|---|---|---|---|---|---|---|
| | Range | 0-0xFFFF | Default | 0 | Unit | - |
| | Activation | Immediate | | | Index | 2139h |

| Set value | Description |
|---|---|
| 【0】 | Reserved |
| 1 | =1, activate full closed loop during trial run |
| 2 | =1, hybrid position deviation clearing |

| P01.42 | Label | Command pulse and touch probe input terminal | Mode | F | | |
|---|---|---|---|---|---|---|
| | Range | 0x0~0x11 | Default | 0x0 | Unit | - |
| | Activation | After restart | | | Index | 2142h |

| Bit 0 | Pulse input terminal | Bit 1 | Touch probe input terminal |
|---|---|---|---|
| 0 | HDIR & HPLUS | 0 | DI5 & DI6 |
| 1 | DI5 & DI6 | 1 | HDIR & HPLUS |

## 3.2.3【Class 2】Vibration Suppression

| P02.00 | Label | Adaptive filtering mode settings | Mode | F | | |
|---|---|---|---|---|---|---|
| | Range | 0~4 | Default | 0 | Unit | - |
| | Activation | Immediate | | | Index | 2200h |

| Set value | Description | |
|---|---|---|
| 0 | Adaptive filter: invalid | Parameters related to 3rd and 4th notch filter remain unchanged |
| 1 | Adaptive filter: 1 filter valid for once. | 1 adaptive filter becomes valid. 3rd notch filter related parameters updated accordingly. P02.00 switches automatically to 0 once updated. |
| 2 | Adaptive filter: 1 filter remains valid | 1 adaptive filter becomes valid. 3rd notch filter related parameters will keep updating accordingly. |
| 3-4 | Reserved | - |

| P02.01 | Label | 1st notch frequency | Mode | F | | |
|---|---|---|---|---|---|---|
| | Range | 50~4000 | Default | 4000 | Unit | Hz |
| | Activation | Immediate | | | Index | 2201h |

Set center frequency of 1st torque command notch filter.
Set P02.01 to 4000 to deactivate notch filter

| P02.02 | Label | 1st notch bandwidth | Mode | F | | |
|---|---|---|---|---|---|---|
| | Range | 0~20 | Default | 4 | Unit | - |
| | Activation | Immediate | | | Index | 2202h |

Set notch bandwidth for 1st resonant notch filter.
Under normal circumstances, please use factory default settings. If resonance is under control, in combination with P02.01 and P02.03, P02.02 can be reduced to improve current loop responsiveness which allows higher mechanical stiffness settings.

| P02.03 | Label | 1st notch depth | Mode | F | | |
|---|---|---|---|---|---|---|
| | Range | 0~99 | Default | 0 | Unit | - |
| | Activation | Immediate | | | Index | 2203h |

Set notch depth for 1st resonant notch filter.
Under normal circumstances, please use factory default settings. If resonance is under control, in combination with P02.01 and P02.02, P02.03 can be reduced to improve current loop responsiveness which allows higher mechanical stiffness settings

| | | | | | | |
|---|---|---|---|---|---|---|
| **P02.04** | **Label** | 2nd notch frequency | **Mode** | **F** | | |
| | **Range** | 50~4000 | **Default** | 4000 | **Unit** | Hz |
| | **Activation** | Immediate | | | **Index** | 2204h |
| | Set center frequency of 2nd torque command notch filter.<br>Set P02.04 to 4000 to deactivate notch filter | | | | | |

| | | | | | | |
|---|---|---|---|---|---|---|
| **P02.05** | **Label** | 2nd notch bandwidth | **Mode** | **F** | | |
| | **Range** | 0~20 | **Default** | 4 | **Unit** | - |
| | **Activation** | Immediate | | | **Index** | 2205h |
| | Set notch bandwidth for 2nd resonant notch filter.<br>Under normal circumstances, please use factory default settings. If resonance is under control, in combination with P02.04 and P02.06, P02.05 can be reduced to improve current loop responsiveness which allows higher mechanical stiffness settings. | | | | | |

| | | | | | | |
|---|---|---|---|---|---|---|
| **P02.06** | **Label** | 2nd notch depth | **Mode** | **F** | | |
| | **Range** | 0~99 | **Default** | 0 | **Unit** | - |
| | **Activation** | Immediate | | | **Index** | 2206h |
| | Set notch depth for 1st resonant notch filter.<br>When P02.06 value is higher, notch depth becomes shallow, phase lag reduces. Under normal circumstances, please use factory default settings. If resonance is under control, in combination with P02.04 and P02.05, P02.06 can be reduced to improve current loop responsiveness which allows higher mechanical stiffness settings. | | | | | |

| | | | | | | |
|---|---|---|---|---|---|---|
| **P02.07** | **Label** | 3rd notch frequency | **Mode** | **F** | | |
| | **Range** | 50~4000 | **Default** | 4000 | **Unit** | Hz |
| | **Activation** | Immediate | | | **Index** | 2207h |
| | Set center frequency of 3rd torque command notch filter.<br>Set P02.07 to 4000 to deactivate notch filter | | | | | |

| | | | | | | |
|---|---|---|---|---|---|---|
| **P02.08** | **Label** | 3rd notch bandwidth | **Mode** | **F** | | |
| | **Range** | 0~20 | **Default** | 4 | **Unit** | - |
| | **Activation** | Immediate | | | **Index** | 2208h |
| | Set notch bandwidth for 3rd resonant notch filter.<br>Under normal circumstances, please use factory default settings. | | | | | |

| | | | | | | |
|---|---|---|---|---|---|---|
| **P02.09** | **Label** | 3rd notch depth | **Mode** | **F** | | |
| | **Range** | 0~99 | **Default** | 0 | **Unit** | - |
| | **Activation** | Immediate | | | **Index** | 2209h |
| | Set notch depth for 3rd resonant notch filter.<br>When P02.09 value is higher, notch depth becomes shallow, phase lag reduces. | | | | | |

| | | | | | | |
|---|---|---|---|---|---|---|
| **P02.14** | **Label** | 1st damping frequency | **Mode** | **F** | | |
| | **Range** | 0~2000 | **Default** | 0 | **Unit** | 0.1Hz |
| | **Activation** | Immediate | | | **Index** | 2214h |

0: Deactivate

To suppress wobble at load end. Often used when wobble of flexible structure due to high deceleration upon stopping. Especially effective for wobble with frequencies under 100Hz. Set P02.15 to wobble frequency (wobble frequency can be determined using tracing function of Motion Studio)

| | | | | | | |
|---|---|---|---|---|---|---|
| **P02.16** | **Label** | 2nd damping frequency | **Mode** | **F** | | |
| | **Range** | 0~2000 | **Default** | 0 | **Unit** | 0.1Hz |
| | **Activation** | Immediate | | | **Index** | 2216h |

0: Deactivate

To suppress wobble at load end. Often used when wobble of flexible structure due to high deceleration upon stopping. Especially effective for wobble with frequencies under 100Hz. Set P02.16 to wobble frequency (wobble frequency can be determined using tracing function of Motion Studio)

| | | | | | | |
|---|---|---|---|---|---|---|
| **P02.22** | **Label** | Position command smoothing filter | **Mode** | **PP** | **HM** | **CSP** |
| | **Range** | 0~32767 | **Default** | 300 | **Unit** | 0.1ms |
| | **Activation** | After stopping | | | **Index** | 2222h |

To set time constant of 1 time delay filter of position command.
To set time constant of 1 time delay filter, according to target velocity Vc square wave command as show below.

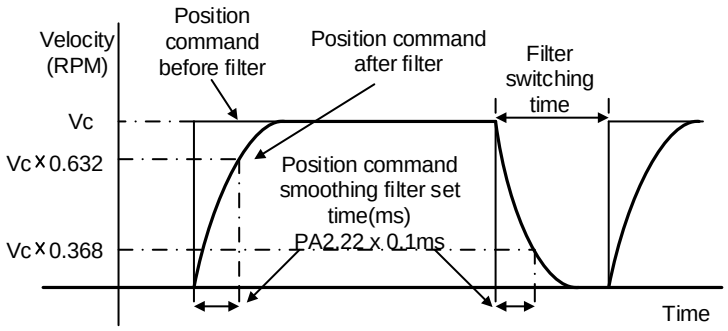


Usually applied when there is rather sharp acceleration which might cause motor overshoot or undershoot. To smoothen command signal, reduces impact to machines and eliminate vibration. If P02.22 is set too high, overall time will be lengthened.

| P02.23 | Label | Position command FIR filter | Mode | PP | HM | CSP |
|---|---|---|---|---|---|---|
| | Range | 0~10000 | Default | 0 | Unit | 0.1ms |
| | Activation | After disabling | | | Index | 2223h |

As shown below, when target velocity Vc square wave command reaches Vc, it becomes trapezoidal wave after filtering.

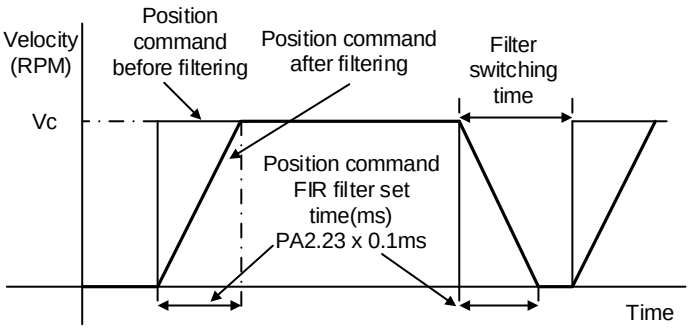


As shown below, when target velocity Vc trapezoidal command reaches Vc, it becomes S wave after filtering.

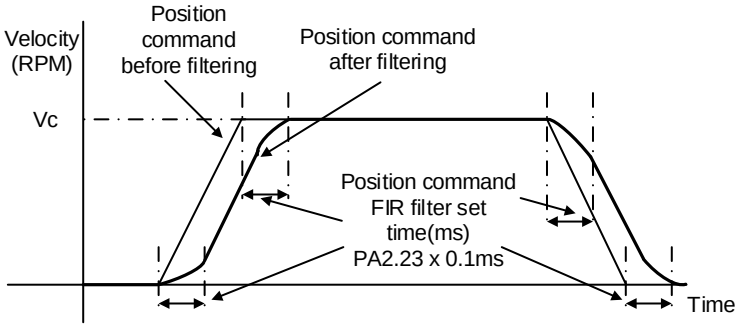


Usually applied when there is rather sharp acceleration which might cause motor overshoot or undershoot. To smoothen command signal, reduces impact to machines and eliminate vibration. If P02.23 is set too high, overall time will be lengthened.

***Please wait for command to stop and after filter idle time to modify P02.23.*

*Filter switching time = (P02.23 set value x 0.1ms + 0.25ms)*

| P02.31 | Label | 5th resonant frequency | Mode | F | | |
|---|---|---|---|---|---|---|
| | Range | 50~4000 | Default | 4000 | Unit | Hz |
| | Activation | Immediate | | | Index | 2231h |

To set zero-valued eigenfrequency of 5th resonant notch filter. P02.31 corresponds to machine specific resonant frequency.

Notch filter deactivated if P02.31 is set to any value.

| P02.32 | Label | 5th resonant Q value | Mode | F | | |
|---|---|---|---|---|---|---|
| | Range | 0~10000 | Default | 0 | Unit | Hz |
| | Activation | Immediate | | | Index | 2232h |

To set notch Q value of 5th resonant notch filter

| P02.33 | Label | 5th anti-resonant frequency | Mode | F | | |
|---|---|---|---|---|---|---|
| | Range | 50~4000 | Default | 4000 | Unit | Hz |
| | Activation | Immediate | | | Index | 2233h |
| | To set zero-valued eigenfrequency of 5th resonant notch filter. P02.31 corresponds to machine-specific anti-resonant frequency. | | | | | |

| P02.34 | Label | 5th anti-resonant Q value | Mode | F | | |
|---|---|---|---|---|---|---|
| | Range | 0~9900 | Default | 0 | Unit | Hz |
| | Activation | Immediate | | | Index | 2234h |
| | To set resonant Q value of 5th resonant notch filter | | | | | |

| P02.35 | Label | 6th resonant frequency | Mode | F | | |
|---|---|---|---|---|---|---|
| | Range | 50~4000 | Default | 4000 | Unit | Hz |
| | Activation | Immediate | | | Index | 2235h |
| | To set zero-valued eigenfrequency of 6th resonant notch filter. P02.35 corresponds to machine-specific resonant frequency.<br>Notch filter deactivated if P02.35 is set to any value. | | | | | |

| P02.36 | Label | 6th resonant Q value | Mode | F | | |
|---|---|---|---|---|---|---|
| | Range | 0~10000 | Default | 0 | Unit | Hz |
| | Activation | Immediate | | | Index | 2236h |
| | To set notch Q value of 6th resonant notch filter | | | | | |

| P02.37 | Label | 6th anti-resonant frequency | Mode | F | | |
|---|---|---|---|---|---|---|
| | Range | 50~4000 | Default | 4000 | Unit | Hz |
| | Activation | Immediate | | | Index | 2237h |
| | To set zero-valued eigenfrequency of 6th resonant notch filter. P02.37 corresponds to machine-specific anti-resonant frequency. | | | | | |

| P02.38 | Label | 6th anti-resonant Q value | Mode | F | | |
|---|---|---|---|---|---|---|
| | Range | 0~9900 | Default | 0 | Unit | Hz |
| | Activation | Immediate | | | Index | 2238h |
| | To set resonant Q value of 6th resonant notch filter | | | | | |

| P02.48 | Label | Adjustment mode | Mode | F | | |
|---|---|---|---|---|---|---|
| | Range | 0~1 | Default | 0 | Unit | - |
| | Activation | Immediate | | | Index | 2248h |

To turn on/off automatic adjustments

| Set value | Description |
|---|---|
| 【0】 | Turn off automatic adjustments |
| 1 | Activate automatic adjustments, real time inertia measuring and |

| | | |
|---|---|---|
| | | vibration suppression. Inertia measuring deactivated after reaching 4 times in 5 minutes, triggering conditions: changes in mechanical stiffness. |

| | | | | | | |
|---|---|---|---|---|---|---|
| **P02.50** | **Label** | MFC type | **Mode** | **PP** | **CSP** | |
| | **Range** | 0~3 | **Default** | 0 | **Unit** | Hz |
| | **Activation** | After restart | | | **Index** | 2250h |

| Set value | Description |
|---|---|
| 【0】 | Model following control |
| 1 | Zero tracking control |
| 2 | *3 inertia (future upgrade)* |
| 3 | *Path following (future upgrade)* |

| | | | | | | |
|---|---|---|---|---|---|---|
| **P02.51** | **Label** | Velocity feedforward compensation coefficient | **Mode** | **PP** | **CSP** | |
| | **Range** | -10000~ 10000 | **Default** | 0 | **Unit** | - |
| | **Activation** | Immediate | | | **Index** | 2251h |

To compensate for velocity feedforward

| | | | | | | | |
|---|---|---|---|---|---|---|---|
| **P02.52** | **Label** | Torque feedforward compensation coefficient | **Mode** | **PP** | **PV** | **CSP** | **CSV** |
| | **Range** | -10000~ 10000 | **Default** | 0 | **Unit** | - | |
| | **Activation** | Immediate | | | **Index** | 2252h | |

To compensate for velocity feedforward

| | | | | | | |
|---|---|---|---|---|---|---|
| **P02.53** | **Label** | Dynamic friction compensation coefficient | **Mode** | **F** | | |
| | **Range** | 0~1000 | **Default** | 0 | **Unit** | % |
| | **Activation** | Immediate | | | **Index** | 2253h |

To set ratio of rated torque/rated rotational speed, to compensate for dynamic friction during motion and have better control over acceleration/deceleration.

$$\text{Dynamic friction coefficient} = \left| \frac{\text{Torque(Rotational speed 1)} - \text{Torque(Rotational speed 2)}}{\text{Rotational speed 1} - \text{Rotational speed 2}} * \text{rated rotational speed} \right|$$

When there is an excess position deviation during acceleration/deceleration, please adjust P02.53 to reduce the deviation to 0.

| | | | | | | |
|---|---|---|---|---|---|---|
| **P02.54** | **Label** | Overtravel time coefficient | **Mode** | **F** | | |
| | **Range** | 0~10000 | **Default** | 0 | **Unit** | - |
| | **Activation** | Immediate | | | **Index** | 2254h |

To set overtravel time coefficient

| | | | | | | |
|---|---|---|---|---|---|---|
| **P02.55** | **Label** | Overtravel suppression gain | **Mode** | **F** | | |
| | **Range** | 0~1000 | **Default** | 0 | **Unit** | - |
| | **Activation** | Immediate | | | **Index** | 2255h |
| | Suppression improves with larger set value but might affect the performance of MFC. Please use with caution for any value above 100. | | | | | |

## 3.2.4【Class 3】Velocity Control

| | | | | | | |
|---|---|---|---|---|---|---|
| **P03.12** | **Label** | Acceleration time | | **Mode** | **PV** | **CSV** |
| | **Range** | 0~10000 | **Default** | 0 | **Unit** | ms/(1000RPM) |
| | **Activation** | Immediate | | | **Index** | 2312h |
| **P03.13** | **Label** | Deceleration time | | **Mode** | **PV** | **CSV** |
| | **Range** | 0~10000 | **Default** | 0 | **Unit** | ms/(1000RPM) |
| | **Activation** | Immediate | | | **Index** | 2313h |

Set max acceleration/deceleration for velocity command.

If target velocity = *x* [rpm], max acceleration = *a* [unit: rpm/ms], acceleration time = *t* [ms]
P03.12 = *1000/a*
P03.13 = *1000/a*
*a = x/t*

For example: If motor is to achieve 1500rpm in 30s, *a=1500/30=50rpm/ms*
P03.12 = 1000/*a= 20.* Hence when P03.12 = 20, motor can achieve 1500rpm in 30s.

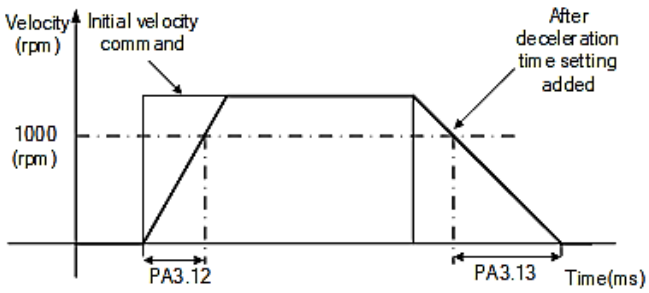


Usually used when there is rapid acceleration or trapezoidal wave velocity command due to many different internal speed segments under velocity control mode which causes instable while motor in motion.

*Under velocity control mode, 6083 and 6084 is limited by P03.12 and P03.13 correspondingly.*

| P03.14 | Label | Sigmoid acceleration/deceleration settings | Mode | PV | CSV |
|---|---|---|---|---|---|
| | Range | 0~1000 | Default | 0 | Unit: ms |
| | Activation | After disabling | | Index | 2314h |

To set sigmoid acceleration and deceleration turning point in accordance to P03.12 and P03.13.

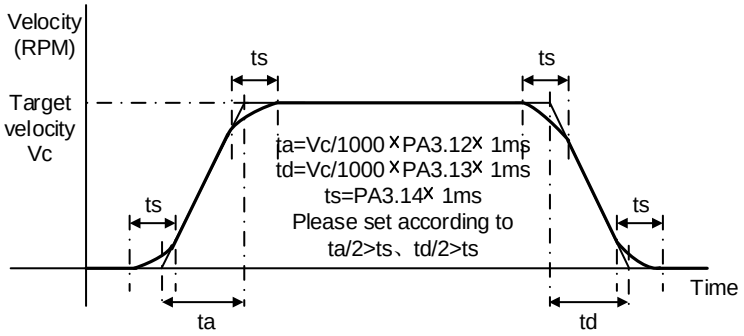


| P03.15 | Label | Zero speed clamp function selection | Mode | F | |
|---|---|---|---|---|---|
| | Range | 0~3 | Default | 0 | Unit: - |
| | Activation | Immediate | | Index | 2315h |

| Set value | Zero speed clamp function |
|---|---|
| 0 | Invalid: zero speed clamp deactivated |
| 1 | Velocity command is forced to 0 when the zero speed clamp (ZEROSPD) input signal is valid. |
| 2 | Velocity command is forced to 0 when actual velocity is lower than P03.16. |
| 3 | Includes conditions from 1 and 2 |

| P03.16 | Label | Zero speed clamp level | Mode | PV | CSV |
|---|---|---|---|---|---|
| | Range | 10~2000 | Default | 30 | Unit: rpm |
| | Activation | Immediate | | Index | 2316h |

Velocity command is forced to 0 when actual velocity is lower than P03.16 and after static time set in P03.23

| P03.23 | Label | Zero speed clamp static time | Mode | PV | CSV |
|---|---|---|---|---|---|
| | Range | 0~32767 | Default | 0 | Unit: ms |
| | Activation | Immediate | | Index | 2323h |

To set delay time for zero speed clamp.

To prevent creeping at low speed, velocity command forced to 0 when velocity goes under P03.16 after time set in P03.23

## 3.2.5【Class 4】I/O Interface Setting

| | | | | | | |
|---|---|---|---|---|---|---|
| **P04.00** | **Label** | Input selection DI1 | **Mode** | **F** | | |
| | **Range** | 0x0~0xFF | **Default** | 0x0 | **Unit** | - |
| | **Activation** | Immediate | | | **Index** | 2400h |
| **P04.01** | **Label** | Input selection DI2 | **Mode** | **F** | | |
| | **Range** | 0x0~0xFF | **Default** | 0x0 | **Unit** | - |
| | **Activation** | Immediate | | | **Index** | 2401h |
| **P04.02** | **Label** | Input selection DI3 | **Mode** | **F** | | |
| | **Range** | 0x0~0xFF | **Default** | 0x0 | **Unit** | - |
| | **Activation** | Immediate | | | **Index** | 2402h |
| **P04.03** | **Label** | Input selection DI4 | **Mode** | **F** | | |
| | **Range** | 0x0~0xFF | **Default** | 0x0 | **Unit** | - |
| | **Activation** | Immediate | | | **Index** | 2403h |
| **P04.04** | **Label** | Input selection DI5 | **Mode** | **F** | | |
| | **Range** | 0x0~0xFF | **Default** | 0x0 | **Unit** | - |
| | **Activation** | Immediate | | | **Index** | 2404h |
| **P04.05** | **Label** | Input selection DI6 | **Mode** | **F** | | |
| | **Range** | 0x0~0xFF | **Default** | 0x0 | **Unit** | - |
| | **Activation** | Immediate | | | **Index** | 2405h |
| **P04.06** | **Label** | Input selection DI7 | **Mode** | **F** | | |
| | **Range** | 0x0~0xFF | **Default** | 0x0 | **Unit** | - |
| | **Activation** | Immediate | | | **Index** | 2406h |
| **P04.07** | **Label** | Input selection DI8 | **Mode** | **F** | | |
| | **Range** | 0x0~0xFF | **Default** | 0 | **Unit** | - |
| | **Activation** | Immediate | | | **Index** | 2407h |

Digital input DI allocation using hexadecimal system

| Input | Symbol | Set value | | 0x60FD(bit) |
|---|---|---|---|---|
| | | Normally open | Normally close | |
| Invalid | — | 0h | - | × |
| Positive limit switch | POT | 1h | 81h | Bit1 |
| Negative limit switch | NOT | 2h | 82h | Bit0 |
| Clear alarm | A-CLR | 4h | - | × |
| Forced alarm | E-STOP | 14h | 94h | × |
| Home switch | HOME-SWITCH | 16h | 96h | Bit2 |

- Please don't set anything other than listed in table above.
- Normally open: Valid when input = ON  Normally close: Valid when input = OFF
- Er210 might occur if same function is allocated to different channels at the same time
- Channel that has no value doesn't affect driver motion.
- Front panel is of hexadecimal system.

P04.00 – P04.07 corresponds to DI1 – DI8. External sensors can be connected if the parameters are all set to 0. Controller will read 60FD bit4 – 11 to get DI1 – DI8 actual status.

| | | | | | | |
|---|---|---|---|---|---|---|
| **P04.10** | **Label** | Output selection DO1 | **Mode** | **F** | | |
| | **Range** | 0x0~0xFF | **Default** | 0x0 | **Unit** | - |
| | **Activation** | Immediate | | | **Index** | 2410h |
| **P04.11** | **Label** | Output selection DO2 | **Mode** | **F** | | |
| | **Range** | 0x0~0xFF | **Default** | 0x0 | **Unit** | - |
| | **Activation** | Immediate | | | **Index** | 2411h |
| **P04.12** | **Label** | Output selection DO3 | **Mode** | **F** | | |
| | **Range** | 0x0~0xFF | **Default** | 0x0 | **Unit** | - |
| | **Activation** | Immediate | | | **Index** | 2412h |

Digital output DO allocation using hexadecimal system.

| Output | Symbol | Set value | |
|---|---|---|---|
| | | Normally open | Normally close |
| Master device control | — | 00h | - |
| Alarm | ALM | 01h | 81h |
| Servo-Ready | S-RDY | 02h | 82h |
| External brake released | BRK-OFF | 03h | 83h |
| Positioning completed | INP | 04h | 84h |
| At-speed | AT-SPEED | 05h | 85h |
| Torque limit signal | TLC | 06h | 86h |
| Zero speed clamp detection | ZSP | 07h | 87h |
| Velocity coincidence | V-COIN | 08h | 88h |
| Position command ON/OFF | P-CMD | 0Bh | 8Bh |
| Velocity limit signal | V-LIMIT | 0Dh | 8Dh |
| Velocity command ON/OFF | V-CMD | 0Fh | 8Fh |
| Servo status | SRV-ST | 12h | 92h |
| Homing done | HOME-OK | 22h | A2h |
| Position comparison | CMP-OUT | 14h | 94h |

*Please don't set any other than the outputs listed in the table above.*

- Normally open：Active low
- Normally close：Active high
- Front panel is of hexadecimal system.

P04.10 – P04.12 corresponds to DO1 – DO3. If all parameters are set to 0, master device controls the outputs, object dictionary 0x60FE sub-index 01 bit16-18 corresponds to DO1-DO3.

| | | | | | | |
|---|---|---|---|---|---|---|
| **P04.22** | **Label** | Analog input 1 zero drift | **Mode** | **F** | | |
| | **Range** | -32766~32766 | **Default** | 0 | **Unit** | 0.3mv |
| | **Activation** | Immediate | | | **Index** | 2422h |

To set zero drift compensation value for zero drift correction.

| | | | | | | |
|---|---|---|---|---|---|---|
| **P04.23** | **Label** | Analog input 1 filter | **Mode** | **F** | | |
| | **Range** | 0~6400 | **Default** | 0 | **Unit** | 0.01ms |
| | **Activation** | Immediate | | | **Index** | 2423h |

To set a delay filter time coefficient for AI1 input voltage. When filter time takes effect, input voltage will be smoothen.

| | | | | | | |
|---|---|---|---|---|---|---|
| **P04.24** | **Label** | Analog input 1 overvoltage | **Mode** | **F** | | |
| | **Range** | 0~100 | **Default** | 0 | **Unit** | 0.1V |
| | **Activation** | Immediate | | | **Index** | 2424h |
| When P04.23 = 0, P04.23 invalid. Er270 might occur when the input voltage of AI1 is higher than the voltage after zero drift correction. | | | | | | |
| **P04.25** | **Label** | Analog input 2 zero drift | **Mode** | **F** | | |
| | **Range** | -32766~32766 | **Default** | 0 | **Unit** | 0.3mv |
| | **Activation** | Immediate | | | **Index** | 2425h |
| To set zero drift compensation value for zero drift correction. | | | | | | |
| **P04.26** | **Label** | Analog input 1 filter | **Mode** | **F** | | |
| | **Range** | 0~6400 | **Default** | 0 | **Unit** | 0.01ms |
| | **Activation** | Immediate | | | **Index** | 2426h |
| To set a delay filter time coefficient for AI2 input voltage. When filter time takes effect, input voltage will be smoothen. | | | | | | |
| **P04.27** | **Label** | Analog input 1 overvoltage | **Mode** | **F** | | |
| | **Range** | 0~100 | **Default** | 0 | **Unit** | 0.1V |
| | **Activation** | Immediate | | | **Index** | 2427h |
| When P04.27 = 0, P04.27 invalid. Er270 might occur when the input voltage of AI2 is higher than the voltage after zero drift correction. | | | | | | |

| | | | | | | |
|---|---|---|---|---|---|---|
| **P04.31** | **Label** | Positioning complete range | **Mode** | **PP** | **HM** | **CSP** |
| | **Range** | 0~10000 | **Default** | 20 | **Unit** | *Command* |
| | **Activation** | Immediate | | | **Index** | 2431h |
| To set position deviation range of INP1 positioning completed output signal. | | | | | | |

| | | | | | | |
|---|---|---|---|---|---|---|
| **P04.32** | **Label** | Positioning complete output settings | **Mode** | **PP** | **HM** | **CSP** |
| | **Range** | 0~4 | **Default** | 1 | **Unit** | - |
| | **Activation** | Immediate | | | **Index** | 2432h |

Output conditions of INP1 positioning completed output signal

| Set value | Positioning completed signal |
|---|---|
| 0 | Signal valid when the position deviation is smaller than P04.31 |
| 1 | Signal valid when there is no position command and position deviation is smaller than P04.31 |
| 2 | Signal valid when there is no position command, zero-speed clamp detection (ZSP) signal is ON and the positional deviation is smaller than P04.31 |
| 3 | Signal valid when there is no position command and position deviation is smaller than P04.31. Signal ON when within the time set in P04.33 otherwise OFF. |
| 4 | When there is no command, position detection starts after the delay time set in P04.33.<br>Signal valid when there is no position command and positional deviation is smaller than P04.31. |

| P04.33 | Label | INP positioning delay time | Mode | PP | HM | CSP |
|---|---|---|---|---|---|---|
| | Range | 0~15000 | Default | 0 | Unit | 1ms |
| | Activation | Immediate | | | Index | 2433h |

To set delay time when P0 4.32 = 3

| Set value | Positioning completed signal |
|---|---|
| 0 | Indefinite delay time, signal ON until next position command |
| 1-15000 | OFF within the time set; ON after time set. Switch OFF after receiving next position command. |

| P04.34 | Label | Zero speed | Mode | F | | |
|---|---|---|---|---|---|---|
| | Range | 1~2000 | Default | 50 | Unit | RPM |
| | Activation | Immediate | | | Index | 2434h |

To set threshold value for zero speed clamp detection.

Zero speed clamp detection (ZSP) output signal valid when motor speed goes under the value set in P04.34

- Disregard the direction of rotation, valid for both directions.
- Hysteresis of 10RPM. Please refer to diagram on the right side.

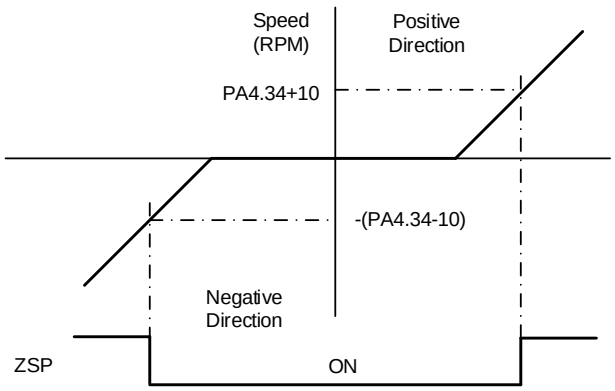

| P04.35 | Label | Velocity coincidence range | Mode | PV | | CSV |
|---|---|---|---|---|---|---|
| | Range | 10~2000 | Default | 50 | Unit | RPM |
| | Activation | Immediate | | | Index | 2435h |

If the difference between velocity command and motor actual speed is below P04.35, Velocity coincidence (V-COIN) output signal valid.

Due to 10RPM hysteresis:
Velocity coincidence output OFF -> ON timing (P04.35 -10) r/min
Velocity coincidence output ON -> OFF timing (P04.35 +10) r/min

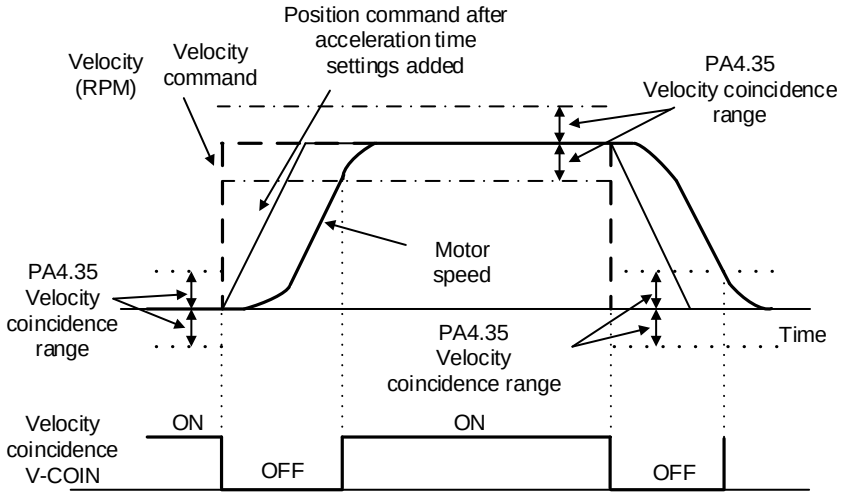


| P04.36 | Label | Reached speed (AT-speed) | Mode | PV | | CSV |
|---|---|---|---|---|---|---|
| | Range | 10~2000 | Default | 1000 | Unit | RPM |
| | Activation | Immediate | | | Index | 2436h |

When motor velocity > P04.36, AT-speed output signal is valid.
Detection using 10RPM hysteresis

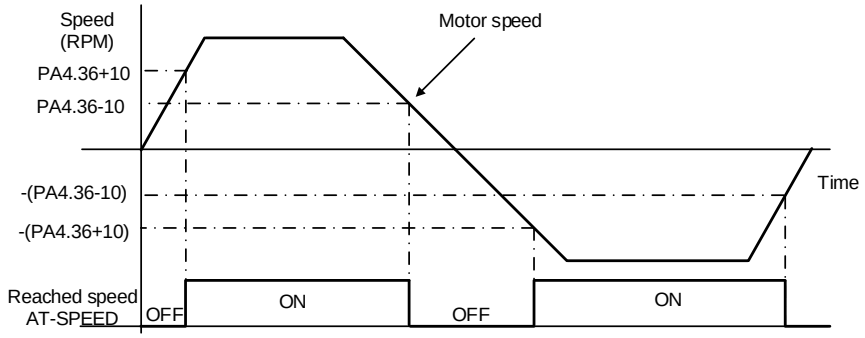


| P04.37 | Label | Motor power-off delay time | Mode | F | | |
|---|---|---|---|---|---|---|
| | Range | 0~3000 | Default | 100 | Unit | 1ms |
| | Activation | Immediate | | | Index | 2437h |

To set delay time for holding brake to be activated after motor power off to prevent axis from sliding.

| P04.38 | Label | Delay time for holding brake release | Mode | F | | |
|---|---|---|---|---|---|---|
| | Range | 0~3000 | Default | 0 | Unit | 1ms |
| | Activation | Immediate | | | Index | 2438h |

To set delay time for holding brake to be released after motor power on. Motor will remain at current position and input command is masked to allow holding brake to be fully released before motor is set in motion.

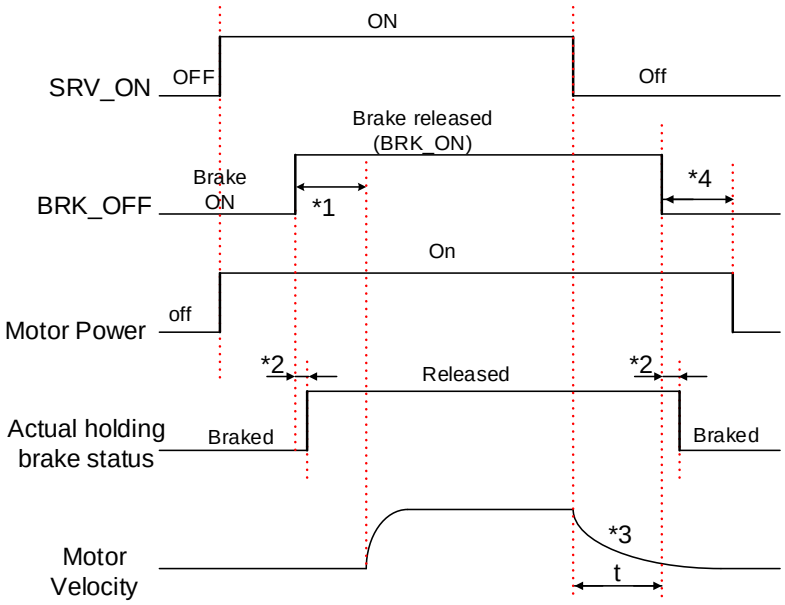


*1: Delay time set in P04.38

*2: Delay time from the moment BRK_OFF signal is given until actual holding brake is released or BRK_ON signal is given until actual holding brake is activated. It is dependent on the holding brake of the motor.

*3: Deceleration time is determined by P06.14 or if motor speed goes below P04.39, whichever comes first. BRK_OFF given after deceleration time.

*4: P04.37 set time value.

*Delay time from the moment SRV_ON is given until BRK_OFF switch to BRK_ON, is less than 500ms.*

| P04.39 | Label | Holding brake activation speed | Mode | F | | |
|---|---|---|---|---|---|---|
| | Range | 30~3000 | Default | 30 | Unit | RPM |
| | Activation | Immediate | | | Index | 2439h |

To set the activation speed for which holding brake will be activated.

When SRV-OFF signal is given, motor decelerates, after it reaches below P04.39 and P06.14 is not yet reached, BRK_OFF is given.
BRK_OFF signal is determined by P06.14 or if motor speed goes below P04.39, whichever comes first.

Application:
1. After disabling axis, P06.14 has been reached but motor speed is still above P04.39, BRK_OFF signal given.
2. After disabling axis, P06.14 has not been reached but motor speed is below P04.39,

BRK_OFF signal given.

| P04.43 | Label | Emergency stop function | Mode | F | | |
|---|---|---|---|---|---|---|
| | Range | 0~1 | Default | 0 | Unit | - |
| | Activation | Immediate | | | Index | 2443h |

0：Emergency stop is valid, servo driver will be forced to STOP and alarm occurs.
1：Emergency stop is invalid, servo driver will not be forced to STOP.

## 3.2.6【Class 5】Extension settings

| P05.04 | Label | Driver prohibition input settings | Mode | F | | |
|---|---|---|---|---|---|---|
| | Range | 0~2 | Default | 0 | Unit | - |
| | Activation | Immediate | | | Index | 2504h |

To set driver prohibition input (POT/NOT): If set to 1, no effect on homing mode.

| Set value | Description |
|---|---|
| 0 | POT → Positive direction drive prohibited<br>NOT → Negative direction drive prohibited |
| 1 | POT and NOT invalid |
| 2 | Any single sided input from POT or NOT might cause Er260 |

In homing mode, POT/NOT invalid, please set object dictionary 5012-04 bit0=1

| P05.06 | Label | Servo-off mode | Mode | F | | |
|---|---|---|---|---|---|---|
| | Range | 3/4 | Default | 3 | Unit | - |
| | Activation | After restart | | | Index | 2506h |

To set servo driver disable mode and status.

| Value | Description | |
|---|---|---|
| | Mode | Status |
| 3 | Servo braking | Free-run |
| 4 | Free stopping | Free-run |

| P05.09 | Label | Main power-off detection time | Mode | F | | |
|---|---|---|---|---|---|---|
| | Range | 50~2000 | Default | 50 | Unit | ms |
| | Activation | Immediate | | | Index | 2509h |

To set duration time for detection of main power-off or low voltage supply.

| P05.09 | Label | Servo-off due to alarm mode | Mode | F | | |
|---|---|---|---|---|---|---|
| | Range | 3/4 | Default | 3 | Unit | - |
| | Activation | After restart | | | Index | 2509h |

To set servo driver disable mode and status if alarm is triggered.

Alarm type 2:

| Value | Description | |
|---|---|---|
| | Mode | Status |
| 3 | Servo braking | Free-run |
| 4 | Free stopping | Free-run |

Alarm type 1:

| Value | Description | |
|---|---|---|
| | Mode | Status |
| 3 | Servo braking | Free-run |
| 4 | Free stopping | Free-run |

| P05.11 | Label | Servo braking torque setting | Mode | F | | |
|---|---|---|---|---|---|---|
| | Range | 0~500 | Default | 0 | Unit | % |
| | Activation | Immediate | | | Index | 2511h |

To set torque limit for servo braking mode.

If P05.11 = 0, use torque limit as under normal situation.

Between max. torque 6072 and P05.11, actual torque limit will take smaller value.

| P05.12 | Label | Overload level setting | Mode | F | | |
|---|---|---|---|---|---|---|
| | Range | 0~115 | Default | 0 | Unit | % |
| | Activation | Immediate | | | Index | 2512h |

If P05.12 = 0, overload level = 115%

Use only when overload level degradation is needed.

| P05.13 | Label | Overspeed level setting | Mode | F | | |
|---|---|---|---|---|---|---|
| | Range | 0~10000 | Default | 0 | Unit | RPM |
| | Activation | Immediate | | | Index | 2513h |

If motor speed exceeds P05.13, Er1A0 might occur.
When P05.13 = 0, overspeed level = max. motor speed x 1.2

| P05.15 | Label | I/O digital filter | Mode | F | | |
|---|---|---|---|---|---|---|
| | Range | 0~255 | Default | 10 | Unit | 0.1ms |
| | Activation | Immediate | | | Index | 2515h |

Digital filtering of I/O input. Overly large value set will cause control delay.

| P05.17 | Label | Counter clearing input mode | Mode | F | | |
|---|---|---|---|---|---|---|
| | Range | 0~4 | Default | 3 | Unit | - |
| | Activation | Immediate | | | Index | 2517h |

To set the clearing conditions for deviation counter clearing input signal.

| Value | Condition |
|---|---|
| 0/2/4 | Invalid |
| 1 | Always clear |
| 3 | Clear only once (Rising edge trigger) |

| P05.20 | Label | Position unit setting | Mode | PP | HM | CSP |
|---|---|---|---|---|---|---|
| | Range | 0~2 | Default | 2 | Unit | - |
| | Activation | After restart | | | Index | 2520h |

| Set value | Unit |
|---|---|
| 0 | Encoder unit |
| 1 | Command unit |
| 2 | 0.0001rev |

Command unit: Pulse from host (Affected by electronic gear ratio)

Encoder unit: Pulse from encoder (Related to encoder resolution)

P05.20 can only be modified when axis is disabled as it will clear position data.

| P05.21 | Label | Torque limit selection | Mode | F | | |
|---|---|---|---|---|---|---|
| | Range | 0~2 | Default | 0 | Unit | - |
| | Activation | Immediate | | | Index | 2521h |

| Set value | Positive limit value | Negative limit value |
|---|---|---|
| 0 | P00.13 | P00.13 |
| 1 | P00.13 | P05.22 |
| 2 | 60E0 | 60E1 |

Between max. torque 6072 and P05.21, actual torque limit will take smaller value.

| P05.22 | Label | 2nd Torque limit | Mode | F | | |
|---|---|---|---|---|---|---|
| | Range | 0~500 | Default | 300 | Unit | % |
| | Activation | Immediate | | | Index | 2522h |
| | Limited by motor max. torque.<br>Between max. torque 6072 and P05.22, actual torque limit will take smaller value. | | | | | |

| P05.37 | Label | Torque limit duration during homing | Mode | F | | |
|---|---|---|---|---|---|---|
| | Range | 0~5000 | Default | 500 | Unit | ms |
| | Activation | Immediate | | | Index | 2537h |
| | To set time threshold for output torque to reach limit under torque initialization mode.<br>*Only applicable for torque initialization method -6 to -1*<br>Under torque initialization mode, motor torque reached P05.39 and the duration reaches P05.37 before moving into next step. | | | | | |

| P05.39 | Label | 3rd torque limit | Mode | F | | |
|---|---|---|---|---|---|---|
| | Range | 0~500 | Default | 80 | Unit | % |
| | Activation | Immediate | | | Index | 2539h |
| | To set torque limit during torque initialization<br>Between max. torque 6072 and P05.37, actual torque limit will take smaller value. | | | | | |

| P05.40 | Label | D41 set value | Mode | F | | |
|---|---|---|---|---|---|---|
| | Range | 0x0~0xFFFFF | Default | 0X30C | Unit | % |
| | Activation | Immediate | | | Index | 2540h |
| | Set object word monitored by D41, index (left 4 bits) + sub-index (right 1 bit), if monitoring 0x6092-01, set P05.40 to 0x60921. | | | | | |

| P05.42 | Label | Frequency divider output - ABZ signal polarity | Mode | F | | |
|---|---|---|---|---|---|---|
| | Range | 0~7 | Default | 0 | Unit | - |
| | Activation | After restart | | | Index | 2542h |

| Bit | Polarity | Description |
|---|---|---|
| Bit0 | 0 = Positive<br>1 = Negative | Z polarity setting of frequency divider output and position comparison |
| Bit1 | 0 = Positive<br>1 = Negative | Only valid in position comparison.<br>Polarity setting when phase A frequency divider as position comparison output |
| Bit2 | 0 = Positive | Only valid in position comparison.<br>Polarity setting when phase B frequency divider as position comparison output |

| P05.43 | Label | Frequency divider output – Z-signal width | Mode | F | | |
|---|---|---|---|---|---|---|
| | Range | 0~500 | Default | 0 | Unit | μs |
| | Activation | After restart | | | Index | 2543h |

| Set value | Description |
|---|---|
| 【0】 | Z bandwidth equivalent to 1 cycle of A/B |
| 1~500 | Delay setting on top of A/B cycle width |

When P05.43 = 0, width of frequency divider output Z-signal is equivalent to width of 1 cycle of A/B, value set in P05.43 + A/B cycle width = delay setting.

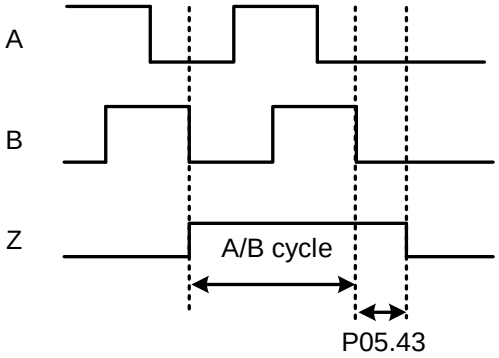


| P05.44 | Label | Frequency divider output source | Mode | F | | |
|---|---|---|---|---|---|---|
| | Range | 0~4 | Default | 0 | Unit | - |
| | Activation | After restart | | | Index | 2544h |

| Set Value | Description |
|---|---|
| 【0】 | Position feedback of encoder #1(motor encoder) |
| 1 | Position feedback of encoder #2(external encoder) |
| 2 | Reserved |
| 3 | Pulse input command position synchronous output; position comparison not available in this mode |
| 4 | Frequency divider output prohibited |

| P05.45 | Label | External encoder overspeed feedback threshold | Mode | F | | |
|---|---|---|---|---|---|---|
| | Range | 0~10000 | Default | 0 | Unit | RPM |
| | Activation | Immediate | | | Index | 2545h |

To set external encoder overspeed feedback threshold

| P05.46 | Label | Vent overload level | Mode | F | | |
|---|---|---|---|---|---|---|
| | Range | 0~115 | Default | 0 | Unit | % |
| | Activation | Immediate | | | Index | 2546h |

| Set value | Description |
|---|---|
| 【0】 | Default level: 80% |
| 1~115 | Set vent overload level accordingly |

## 3.2.7【Class 6】Other settings

| P06.01 | Label | Encoder zero position compensation | Mode | F | | |
|---|---|---|---|---|---|---|
| | Range | 0~360 | Default | 0 | Unit | ° |
| | Activation | After restart | | | Index | 2601h |
| | Angle of the encoder after zero position calibration | | | | | |

| P06.03 | Label | JOG trial run torque command | Mode | F | | |
|---|---|---|---|---|---|---|
| | Range | 0~350 | Default | 350 | Unit | % |
| | Activation | Immediate | | | Index | 2603h |
| | To set torque for JOG trial run command. | | | | | |

| P06.04 | Label | JOG trial run velocity command | Mode | F | | |
|---|---|---|---|---|---|---|
| | Range | 0~10000 | Default | 30 | Unit | r/min |
| | Activation | Immediate | | | Index | 2604h |
| | To set velocity for JOG trial run command. | | | | | |

| P06.05 | Label | Position 3rd gain valid time | Mode | PP | HM | CSP |
|---|---|---|---|---|---|---|
| | Range | 0~10000 | Default | 0 | Unit | 0.1ms |
| | Activation | Immediate | | | Index | 2605h |
| | To set time for 3rd gain to be valid<br>When not in use, set P06.05=0, P06.06=100 | | | | | |
| P06.06 | Label | Position 3rd gain scale factor | Mode | PP | HM | CSP |
| | Range | 0~1000 | Default | 100 | Unit | 100% |
| | Activation | Immediate | | | Index | 2606h |
| Set up the 3rd gain by multiplying factor of the 1st gain<br><br>Above diagram is illustrated using P01.15 = 7.<br>3rd gain= 1st gain * P06.06/100<br>Only effective under position control mode. 3rd gain valid when P06.05 ≠ 0. Set 3rd gain value in | | | | | | |

P06.06. When 2nd gain switches to 1st gain, it will go through 3rd, switching time is set in P01.19.

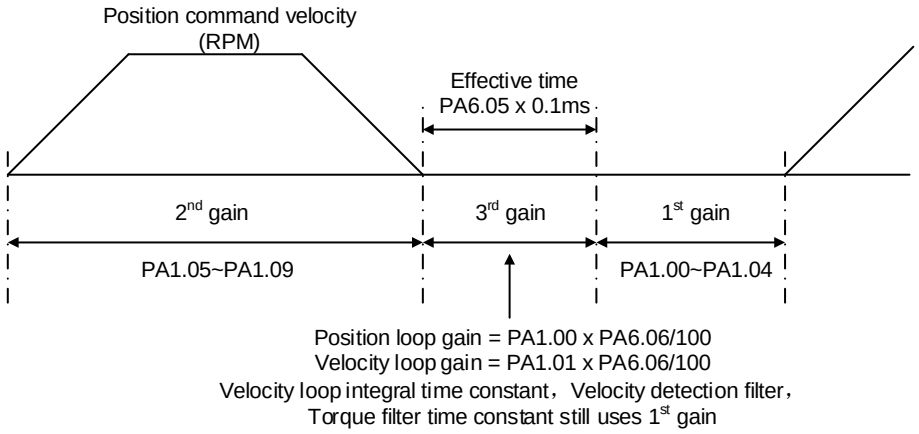


| | | | | | | |
|---|---|---|---|---|---|---|
| **P06.07** | **Label** | Torque command additional value | **Mode** | **F** | | |
| | **Range** | -100~100 | **Default** | 0 | **Unit** | % |
| | **Activation** | Immediate | | | **Index** | 2607h |

To set torque forward feed additional value of vertical axis.

Applicable for loaded vertical axis, compensate constant torque.

Application: When load move along vertical axis, pick any point from the whole motion and stop the load at that particular point with motor enabled but not rotating. Record output torque value from d04, use that value as torque command additional value (compensation value)

| | | | | | | |
|---|---|---|---|---|---|---|
| **P06.08** | **Label** | Positive direction torque compensation value | **Mode** | **F** | | |
| | **Range** | -100~100 | **Default** | 0 | **Unit** | % |
| | **Activation** | Immediate | | | **Index** | 2608h |
| **P06.09** | **Label** | Negative direction torque compensation value | **Mode** | **F** | | |
| | **Range** | -100~100 | **Default** | 0 | **Unit** | % |
| | **Activation** | Immediate | | | **Index** | 2609h |

To reduce the effect of mechanical friction in the movement(s) of the axis. Compensation values can be set according to needs for both rotational directions.

Applications:

1. When motor is at constant speed, d04 will deliver torque values.

Torque value in positive direction = T1;

Torque value in negative direction = T2

P06.08/P06.09 = $T_f$ = $\frac{|T1-T2|}{2}$

| | | | | | | |
|---|---|---|---|---|---|---|
| **P06.11** | **Label** | Current response setting | **Mode** | **F** | | |
| | **Range** | 50~100 | **Default** | 100 | **Unit** | % |
| | **Activation** | Immediate | | | **Index** | 2611h |
| | To set driver current loop related effective value ratio | | | | | |

| | | | | | | |
|---|---|---|---|---|---|---|
| **P06.14** | **Label** | Max. time to stop after disabling | **Mode** | **F** | | |
| | **Range** | 0~3000 | **Default** | 500 | **Unit** | ms |
| | **Activation** | Immediate | | | **Index** | 2614h |
| | To set the max. time allowed for the axis to stop on emergency stop or normal axis disabling.<br>After disabling axis, if motor speed is still higher than P04.39 but the time set in P06.14 is reached, BRK_ON given and holding brake activated.<br>BRK_ON given time is determined by P06.14 or when motor speed goes below P04.39, whichever comes first.<br><br>Applications:<br>1. After disabling axis, if motor speed is still higher than P04.39 but the time set in P06.14 is reached, BRK_ON given and holding brake activated.<br>2. After disabling axis, if motor speed is already lower than P04.39 but the time set in P06.14 is not yet reached, BRK_ON given and holding brake activated. | | | | | |

| | | | | | | |
|---|---|---|---|---|---|---|
| **P06.20** | **Label** | Trial run distance | **Mode** | **F** | | |
| | **Range** | 0~1200 | **Default** | 10 | **Unit** | 0.1rev |
| | **Activation** | Immediate | | | **Index** | 2620h |
| | JOG (Position control) : Distance travel of each motion | | | | | |

| | | | | | | |
|---|---|---|---|---|---|---|
| **P06.21** | **Label** | Trial run waiting time | **Mode** | **F** | | |
| | **Range** | 0~30000 | **Default** | 300 | **Unit** | ms |
| | **Activation** | Immediate | | | **Index** | 2621h |
| | JOG (Position control) : Waiting time after each motion | | | | | |
| **P06.22** | **Label** | No. of trial run cycles | **Mode** | **F** | | |
| | **Range** | 0~32767 | **Default** | 5 | **Unit** | - |
| | **Activation** | Immediate | | | **Index** | 2622h |
| | JOG (Position control) : No. of cycles | | | | | |

| | | | | | | |
|---|---|---|---|---|---|---|
| **P06.25** | **Label** | Trial run acceleration | **Mode** | **F** | | |
| | **Range** | 0~10000 | **Default** | 200 | **Unit** | ms/ (1000rpm) |
| | **Activation** | Immediate | | | **Index** | 2625h |
| | To set the acceleration/deceleration time for JOG command between 0 rpm to 1000 rpm | | | | | |

| | | | | | | |
|---|---|---|---|---|---|---|
| **P06.28** | **Label** | Velocity observer gain | **Mode** | **F** | | |
| | **Range** | 0~32767 | **Default** | 0 | **Unit** | - |
| | **Activation** | Immediate | | | **Index** | 2628h |
| | 0: Default stable gain; Modifications are not recommended. | | | | | |

| | | | | | | |
|---|---|---|---|---|---|---|
| **P06.29** | **Label** | Velocity observer bandwidth | **Mode** | **F** | | |
| | **Range** | 0~32767 | **Default** | 0 | **Unit** | - |
| | **Activation** | Immediate | | | **Index** | 2629h |
| | 0: Default stable bandwidth; Modifications are not recommended. | | | | | |

| | | | | | | |
|---|---|---|---|---|---|---|
| **P06.34** | **Label** | Frame error window time | **Mode** | **F** | | |
| | **Range** | 0~32767 | **Default** | 100 | **Unit** | - |
| | **Activation** | Immediate | | | **Index** | 2634h |
| | To set EtherCAT data frame error detection window time | | | | | |

| | | | | | | |
|---|---|---|---|---|---|---|
| **P06.35** | **Label** | Frame error window | **Mode** | **F** | | |
| | **Range** | 0~32767 | **Default** | 50 | **Unit** | - |
| | **Activation** | Immediate | | | **Index** | 2635h |
| | To set EtherCAT data frame error detection window | | | | | |

| | | | | | | |
|---|---|---|---|---|---|---|
| **P06.54** | **Label** | Absolute value rotation mode denominator setting | **Mode** | **PP** | **HM** | **CSP** |
| | **Range** | 0~32766 | **Default** | 0 | **Unit** | - |
| | **Activation** | After restart | | | **Index** | 2654h |
| | To set denominator of absolute encoder in rotational mode.<br>When P00.15 = 2 and use in combination with P06.54:<br>Feedback load position 6064= $\frac{PA6.63}{PA6.54}$ x Electronic gear ratio | | | | | |
| **P06.56** | **Label** | Blocked rotor alarm torque threshold | **Mode** | **F** | | |
| | **Range** | 0~300 | **Default** | 300 | **Unit** | % |
| | **Activation** | Immediate | | | **Index** | 2656h |
| | To set the torque threshold of blocked rotor to trigger alarm. (Alarm triggered if torque output% larger than threshold value & under 10rpm)<br>If P06.56 = 0, blocked rotor alarm deactivated.<br>If motor speed is 10rpm or above, Er102 won't be triggered. | | | | | |

| P06.57 | Label | Blocked rotor alarm delay time | Mode | F | | |
|---|---|---|---|---|---|---|
| | Range | 0~1000 | Default | 400 | Unit | ms |
| | Activation | Immediate | | | Index | 2657h |

To set delay time for blocked rotor alarm to trigger, if rotor blocked duration is not longer than time set in P06.57, Er102 won't be triggered.
Please look at the following diagram to set up Er102 alarm trigger.

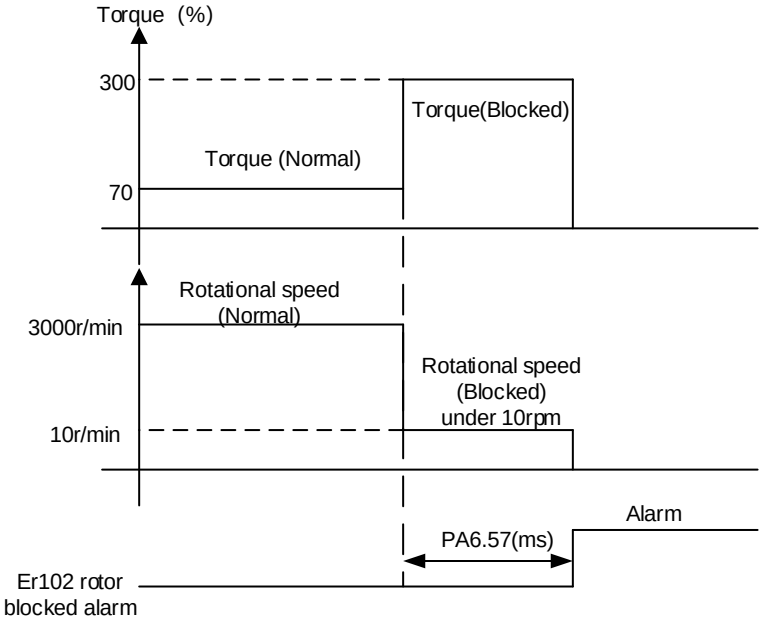


**if rotational speed is more than 10rpm when motor rotor is blocked, Er100 will be triggered.*

| P06.59 | Label | Homing mode position threshold | Mode | F | | |
|---|---|---|---|---|---|---|
| | Range | 0~100 | Default | 8 | Unit | 0.00001rev |
| | Activation | Immediate | | | Index | 2659h |

To set position threshold for homing mode.

| P06.61 | Label | Z signal holding time | Mode | F | | |
|---|---|---|---|---|---|---|
| | Range | 0~100 | Default | 10 | Unit | ms |
| | Activation | Immediate | | | Index | 2661h |

To set the holding time for Z signal to maintain active high

Application:

1. Z signal for 60FDH；
2. Z signal for homing process
3. Z-phase frequency output pulse width. Unit = 0.1ms;

Please set P06.61≥0.2ms if used for 3 applications as above

| P06.63 | Label | Absolute multiturn data upper limit | Mode | F | | |
|---|---|---|---|---|---|---|
| | Range | 0~32766 | Default | 0 | Unit | rev |
| | Activation | Immediate | | | Index | 2663h |

To set upper limit of multiturn data with absolute encoder set as rotational mode.

When P00.15 = 2 and use in combination with P06.54:

Feedback load position 6064= $\frac{P06.63}{P06.54}$ x Electronic gear ratio

## 3.2.8【Class 7】Factory settings

*Please take precaution when modifying Class 7 parameters. Might cause driver errors*

| P07.15 | Label | Motor model | Mode | F | | |
|---|---|---|---|---|---|---|
| | Range | 0x0~0x7FFF | Default | 0x200 | Unit | - |
| | Activation | After restart | Data length | 16 bit | Property | R/W |

| Set value | Description |
|---|---|
| 0x100 | Read from EEPROM |
| [0x200] | Read from Encoder |

When P07.15 = 0x200(2xx):

| Parameter | Label |
|---|---|
| P07.00 | Current loop gain |
| P07.01 | Current loop integral time |
| P07.05 | No. of motor pole pairs |
| P07.06 | Motor phase resistance |
| P07.07 | Motor D/Q induction |
| P07.08 | Motor back EMF coefficient |
| P07.09 | Motor torque coefficient |
| P07.10 | Motor rated rotational speed |
| P07.11 | Motor max. rotational speed |
| P07.12 | Motor rated current |
| P07.13 | Motor rotor inertia |
| P07.14 | Driver power rating |
| P07.16 | Encoder |
| P07.17 | Motor max. current |
| P07.18 | Encoder index angle compensation |

| P07.16 | Label | Encoder | Mode | F | | |
|---|---|---|---|---|---|---|
| | Range | 0x0~0x200 | Default | *Encoder* | Unit | - |
| | Activation | After restart | Data length | 16 bit | Property | R/W |

| Set value | Description |
|---|---|
| 0x0 | 17-bit encoder |
| 0x7 | 23-bit encoder |

| P07.54 | Label | External grating ruler precision | Mode | F | | |
|---|---|---|---|---|---|---|
| | Range | 1-1000000 | Default | 100 | Unit | nm |
| | Activation | After restart | Data length | 16 bit | Property | R/W |

To select external grating ruler precision

## 3.2.9【Class C】Position Comparison

| P0C.00 | Label | Position comparison | Mode | F | | |
|---|---|---|---|---|---|---|
| | Range | 0~1 | Default | 0 | Unit | % |
| | Activation | Immediate | | | Index | 27A4-01 |

| Set Value | Description |
|---|---|
| 【0】 | Disable |
| 1 | Enable （Rising edge） |

| P0C.01 | Label | Position comparison mode | Mode | F | | |
|---|---|---|---|---|---|---|
| | Range | 0~2 | Default | 0 | Unit | - |
| | Activation | Immediate | | | Index | 27A4-02 |

| Set value | Description |
|---|---|
| 【0】 | Single comparison |
| 1 | N cycles comparison |
| 2 | Cycle comparison |

Detailed explanations is available in Chapter 6 Application under Position Comparison section

| P0C.02 | Label | Position comparison pulse output width | Mode | F | | |
|---|---|---|---|---|---|---|
| | Range | 0~4095 | Default | 0.1ms | Unit | ms |
| | Activation | Immediate | | | Index | 27A4-03 |

To set output signal pulse width of position comparison

| P0C.03 | Label | Position comparison output delay time compensation | Mode | F | | |
|---|---|---|---|---|---|---|
| | Range | -10000~10000 | Default | 0 | Unit | 0.1μs |
| | Activation | After restart | | | Index | 27A4-04 |
| | To set delay time compensation for delay due to DO/ frequency divider | | | | | |

| P0C.04 | Label | Position comparison starting point | Mode | F | | |
|---|---|---|---|---|---|---|
| | Range | 1~42 | Default | 1 | Unit | - |
| | Activation | Immediate | | | Index | 27A4-05 |
| | To set the starting point of position comparison. | | | | | |

| P0C.05 | Label | Position comparison end point | Mode | F | | |
|---|---|---|---|---|---|---|
| | Range | 1~42 | Default | 1 | Unit | - |
| | Activation | Immediate | | | Index | 27A4-06 |
| | To set the starting point of position comparison. | | | | | |

| P0C.06 | Label | No. of cycle for N cycles comparison | Mode | F | | |
|---|---|---|---|---|---|---|
| | Range | 1~50000 | Default | 1 | Unit | - |
| | Activation | Immediate | | | Index | 27A4-07 |
| | To set the number of cycles for N cycles comparison in position comparison. | | | | | |

| P0C.07 | Label | Position comparison – set current position as origin | Mode | F | | |
|---|---|---|---|---|---|---|
| | Range | 0~1 | Default | 0 | Unit | - |
| | Activation | Immediate | | | Index | 27A4-08 |

| Set Value | Description |
|---|---|
| 【0】 | Disable |
| 1 | Enable （Rising edge） |

Set origin for position comparison, set current position as origin at rising edge.

| P0C.08 | Label | Position comparison – Offset to origin | Mode | F | | |
|---|---|---|---|---|---|---|
| | Range | $-2^{31}$~($2^{31}$-1) | Default | 0 | Unit | - |
| | Activation | Immediate | | | Index | 27A4-09 |
| | To set offset value of position in comparison to origin set in P05.77 | | | | | |

| | | | | | | |
|---|---|---|---|---|---|---|
| **P0C.20 – P0C.61** | **Label** | Position comparison 1-42 target value | **Mode** | **F** | | |
| | **Range** | $-2^{31} \sim 2^{31}$ | **Default** | 0 | **Unit** | *Command* |
| | **Activation** | Immediate | | | **Index** | 27A4-15 ~ 27A4-3E |

When target position (value) is reached, position comparison output will be depended on the position comparison properties value set.

| | | | | | | |
|---|---|---|---|---|---|---|
| **P0C.70** | **Label** | Position comparison 1 & 2 attributes value | **Mode** | **F** | | |
| | **Range** | 0~32767 | **Default** | 0 | **Unit** | - |
| | **Activation** | Immediate | | | **Index** | 27A4-47 |

| Bit | Position comparison 1 |
|---|---|
| 0 | Positive traversal comparison. 0=OFF,1=ON |
| 1 | Negative traversal comparison. 0=OFF,1=ON |
| 2~5 | Reserved |
| 6 | Output property settings：<br>=0：Pulse mode<br>=1：Flipping mode |
| 7 | DO1 |
| 8 | DO2 |
| 9 | DO3 |
| 10~12 | Reserved |
| 13 | Frequency divider Phase A output |
| 14 | Frequency divider Phase B output |
| 15 | Frequency divider Phase Z output |

| Bit | Position comparison 2 |
|---|---|
| 16 | Positive traversal comparison. 0=OFF,1=ON |
| 17 | Negative traversal comparison. 0=OFF,1=ON |
| 18~21 | Reserved |
| 22 | Output property settings：<br>=0：Pulse mode<br>=1：Flipping mode |
| 23 | DO1 |
| 24 | DO2 |
| 25 | DO3 |
| 26~28 | Reserved |
| 29 | Frequency divider Phase A output |
| 30 | Frequency divider Phase B output |
| 31 | Frequency divider Phase Z output |

| P0C.75 – P0C.94 | Label | Position comparison x & y attributes value | Mode | F | | |
|---|---|---|---|---|---|---|
| | Range | 0x0~0xFFFFFFFF | Default | 0 | Unit | - |
| | Activation | Immediate | | | Index | |
| | x,y = (3,4), (5,6)……..(41,42)<br>bit 0~15: Position comparison x; bit 16~31: Position comparison y<br>Please refer to P0C.74 | | | | | |

## 3.3 402 Parameters Function

- Panel Display as follows:

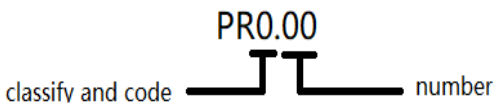


- Parameter Valid mode Description

CSP: Valid in cyclic synchronous position mode

CSV: Valid in cyclic synchronous velocity mode

CST: Valid in cyclic synchronous torque mode

HM: Valid in homing mode

PP: Valid in profile position mode

PV: Valid in profile velocity mode

PT: Valid in profile torque mode

F: Valid in all modes

| Index 603Fh | Label | Error code | | | Mode | F | | |
|---|---|---|---|---|---|---|---|---|
| | Range | 0x0~0xFFFF | | | Default | 0X0 | Unit | - |
| | Structure | VAR | Type | Uint16 | Mapping | TPDO | Access | RO |
| | *Please refer to Chapter 9 for more details on error codes.* | | | | | | | |

| Index 6040h | Label | Control word | | | Mode | F | | |
|---|---|---|---|---|---|---|---|---|
| | Range | 0x0~0xFFFF | | | Default | 0X0 | Unit | - |
| | Structure | VAR | Type | Uint16 | Mapping | RPDO | Access | RW |

| Bit | Label | Description |
|---|---|---|
| 0 | Start | 1 - valid, 0 - invalid |
| 1 | Main circuit power on | 1 - valid, 0 - invalid |
| 2 | Quick stop | 0 - valid,1 - invalid |
| 3 | Servo running | 1 - valid, 0 - invalid |
| 4-6 | Running mode related | Related to each servo running mode |
| 7 | Fault reset | Reset resettable fault alarm. Rising edge of Bit7 is valid, bit7 remains at 1, and all other instructions are invalid |
| 8 | Pause | For more information on how to pause in each mode, refer to Object Dictionary 605Dh |
| 9 | No definition | Undefined |
| 10 | Reserved | Undefined |
| 11-15 | Reserved | Undefined |

| Index 6041h | Label | Status word | | | Mode | F | | |
|---|---|---|---|---|---|---|---|---|
| | Range | 0x0~0xFFFF | | | Default | 0X0 | Unit | - |
| | Structure | VAR | Type | Uint16 | Mapping | TPDO | Access | RO |

| Bit | Label | Description |
|---|---|---|
| 0 | Servo ready | 1 - valid, 0 - invalid |
| 1 | Start | 1 - valid, 0 - invalid |
| 2 | Servo running | 1 - valid, 0 - invalid |
| 3 | Fault | 1 - valid, 0 - invalid |
| 4 | Main circuit power on | 1 - valid, 0 - invalid |
| 5 | Quick stop | 0- valid, 1 - invalid |
| 6 | Servo cannot run | 1 - valid, 0 - invalid |
| 7 | Warning | 1 - valid, 0 - invalid |
| 8 | Reserved | Reserved |
| 9 | Remote control | 1 - valid, 0 - invalid |
| 10 | Arrived at position | 1 - valid, 0 - invalid |
| 11 | Internal limit valid | 1 - valid, 0 - invalid |
| 12-13 | Mode related | Related to each servo operation mode |
| 14 | Reserved | Reserved |
| 15 | Origin found | 1 - valid, 0 - invalid |

| Index 605Ah | Label | Quick stop option code | | | Mode | F | | |
|---|---|---|---|---|---|---|---|---|
| | Range | 0~7 | | | Default | 2 | Unit | - |
| | Structure | VAR | Type | INT16 | Mapping | - | Access | RW |

Motor stops when quick stop option code is given.

**PP, CSP, CSV, PV**

0 ： To stop motor through P05.06. Status: Switch on disable, axis disabled.

1 : Motor decelerates and stops through 6084. Status: Switch on disable, axis disabled.

2 : Motor decelerates and stops through 6085. Status: Switch on disable, axis disabled.

3 : Motor decelerates and stops through 60C6. Status: Switch on disable, axis disabled.

5 : Motor decelerates and stops through 6084. Status: Quick stop

6 : Motor decelerates and stops through 6085. Status: Quick stop

7 : Motor decelerates and stops through 60C6. Status: Quick stop

**HM**

0 : To stop motor through P05.06. Status: Switch on disable, axis disabled.

1 : Motor decelerates and stops through 609A. Status: Switch on disable, axis disabled.

2 : Motor decelerates and stops through 6085. Status: Switch on disable, axis disabled.

3 : Motor decelerates and stops through 60C6. Status: Switch on disable, axis disabled.

5 : Motor decelerates and stops through 609A. Status: Quick stop

6 : Motor decelerates and stops through 6085. Status: Quick stop

7 : Motor decelerates and stops through 60C6. Status: Quick stop

| **Index 605Bh** | **Label** | Shutdown Option Code | | | **Mode** | **F** | | |
|---|---|---|---|---|---|---|---|---|
| | **Range** | 0~1 | | | **Default** | 0 | **Unit** | - |
| | **Structure** | VAR | **Type** | Uint16 | **Mapping** | - | **Access** | RW |

**PP, CSP, CSV, PV**

0 : To stop motor through P05.06, 5.06 = 0(Emergency stop), 5.06=1(Free stop)

1 : Motor decelerates and stops through 6084

**HM**

0 : To stop motor through P05.06, 5.06 = 0(Emergency stop), 5.06=1(Free stop)

1 : Motor decelerates and stops through 609A

**CST**

0 : To stop motor through P05.06, 5.06 = 0(Emergency stop), 5.06=1(Free stop)

1 : Motor decelerates and stops through 6087

| **Index 605Ch** | **Label** | Disable Operation Option Code | | | **Mode** | **F** | | |
|---|---|---|---|---|---|---|---|---|
| | **Range** | 0~1 | | | **Default** | 0 | **Unit** | - |
| | **Structure** | VAR | **Type** | INT16 | **Mapping** | - | **Access** | RW |

To set motor stopping mode when servo drive is disabled.

**PP, CSP, CSV, PV**

0 : To stop motor through P05.06, 5.06 = 0(Emergency stop), 5.06=1(Free stop)

1 : Motor decelerates and stops through 6084

**HM**

0 ：To stop motor through P05.06, 5.06 = 0(Emergency stop), 5.06=1(Free stop)

1 ：Motor decelerates and stops through 609A

**CST**

0 ：To stop motor through P05.06, 5.06 = 0(Emergency stop), 5.06=1(Free stop)

1 ：Motor decelerates and stops through 6087

| Index 605Dh | Label | Halt Option Code | | | Mode | F | | |
|---|---|---|---|---|---|---|---|---|
| | Range | 1~3 | | | Default | 1 | Unit | - |
| | Structure | VAR | Type | INT16 | Mapping | - | Access | RW |

When control word is set to halt, set deceleration and stop option. Also suitable for deceleration mode settings during mode switching

**PP, CSP, CSV, PV**

1 ：Motor decelerates and stops through 6084. Status: Operation enabled, axis enabled.

2 ：Motor decelerates and stops through 6085. Status: Operation enabled, axis enabled.

3 ：Motor decelerates and stops through 60C6. Status: Operation enabled, axis enabled.

**HM**

1 ：Motor decelerates and stops through 609A. Status: Operation enabled, axis enabled.

2 ：Motor decelerates and stops through 6085. Status: Operation enabled, axis enabled.

3 ：Motor decelerates and stops through 60C6. Status: Operation enabled, axis enabled.

**CST**

1, 2 ：Motor decelerates and stops through 6087. Status: Operation enabled, axis enabled.

3 ：Motor decelerates and stops through torque = 0. Status: Operation enabled, axis enabled.

| Index 605Eh | Label | Fault Reaction Option Code | | | Mode | F | | |
|---|---|---|---|---|---|---|---|---|
| | Range | 0~2 | | | Default | 0 | Unit | - |
| | Structure | VAR | Type | INT16 | Mapping | - | Access | RW |

Select stopping mode when servo alarm (Err 8xx) occurs.

**PP, CSP, CSV, PV**

0 ：Select motor stopping mode according to alarm properties. Status: Fault, axis disabled.

1 ：Motor decelerates and stops through 6084. Status: Fault, axis disabled.

2 ：Motor decelerates and stops through 6085. Status: Fault, axis disabled.

**HM**

0 ：Select motor stop by the alarm attribute for emergency stop, the fault state and disable

1 ：After the 609A motor is decelerated and stopped,, the fault state and disable

2 ：After the 6085 motor is decelerated and stopped, the fault state and disable

**CST**

0, 1 ：Select motor stop by the alarm attribute for emergency stop, the fault state and disable

2 ：After the 6087 motor is decelerated and stopped, the fault state and disable

When other alarms, i.e. drive-side alarms:

Select motor stop by the alarm attribute for emergency stop, the fault state and disable

| **Index 6060h** | **Label** | Mode of Operation | | | **Mode** | **F** | | |
|---|---|---|---|---|---|---|---|---|
| | **Range** | 1~11 | | | **Default** | 8 | **Unit** | - |
| | **Structure** | VAR | **Type** | INT8 | **Mapping** | - | **Access** | RW |

| No. | Mode | Abbr. |
|---|---|---|
| 1 | Profile position mode | PP |
| 3 | Profile velocity mode | PV |
| 4 | profile Torque mode | PT |
| 6 | Homing mode | HM |
| 8 | Cyclic synchronous position mode | CSP |
| 9 | Cyclic synchronous velocity mode | CSV |
| 10 | Cyclic synchronous torque mode | CST |

| **Index 6061h** | **Label** | Mode of Operation display | | | **Mode** | **F** | | |
|---|---|---|---|---|---|---|---|---|
| | **Range** | 1~11 | | | **Default** | 8 | **Unit** | - |
| | **Structure** | VAR | **Type** | INT8 | **Mapping** | - | **Access** | RW |

| No. | Mode | Abbr. |
|---|---|---|
| 1 | Profile position mode | PP |
| 3 | Profile velocity mode | PV |
| 4 | profile Torque mode | PT |
| 6 | Homing mode | HM |
| 8 | Cyclic synchronous position mode | CSP |
| 9 | Cyclic synchronous velocity mode | CSV |
| 10 | Cyclic synchronous torque mode | CST |

| Index 6062h | Label | Position Demand Value | | | Mode | PP | CSP | HM |
|---|---|---|---|---|---|---|---|---|
| | Range | -2147483648~2147483647 | | | Default | 0 | Unit | *Command* |
| | Structure | VAR | Type | INT32 | Mapping | TPDO | Access | RO |
| | Reflects position command when servo driver is enabled. | | | | | | | |

| Index 6063h | Label | Position Actual Internal Value | | | Mode | F | | |
|---|---|---|---|---|---|---|---|---|
| | Range | -2147483648~2147483647 | | | Default | 0 | Unit | *Encoder* |
| | Structure | VAR | Type | INT32 | Mapping | TPDO | Access | RO |
| | Reflects motor absolute position (Encoder unit) | | | | | | | |

| Index 6064h | Label | Position Actual Value | | | Mode | F | | |
|---|---|---|---|---|---|---|---|---|
| | Range | -2147483648~2147483647 | | | Default | 0 | Unit | *Command* |
| | Structure | VAR | Type | INT32 | Mapping | TPDO | Access | RO |
| | Reflects user's real time absolute position<br>6064h*Gear ratio = 6063h | | | | | | | |

| Index 6065h | Label | Follow Error Window | | | Mode | PP | CSP | HM |
|---|---|---|---|---|---|---|---|---|
| | Range | 0~2147483647 | | | Default | 30000 | Unit | *Command* |
| | Structure | VAR | Type | UINT32 | Mapping | RPDO | Access | RO |
| | To set an acceptable deviation for requested position.<br>When actual position exceed position deviation window, error might occur. | | | | | | | |

| Index 6066h | Label | Follow Error Time Out | | | Mode | PP | CSP | HM |
|---|---|---|---|---|---|---|---|---|
| | Range | 0~65535 | | | Default | 10 | Unit | *Command* |
| | Structure | VAR | Type | UINT16 | Mapping | RPDO | Access | RO |
| | To set position deviation detection time | | | | | | | |

| Index 6067h | Label | Position window | | | Mode | PP | CSP | HM |
|---|---|---|---|---|---|---|---|---|
| | Range | 0~2147483647 | | | Default | 10 | Unit | *Command* |
| | Structure | VAR | Type | UINT32 | Mapping | RPDO | Access | RO |
| | To set an acceptable extent of arrival position | | | | | | | |

| Index 6068h | Label | Position window time | | | Mode | PP | CSP | HM |
|---|---|---|---|---|---|---|---|---|
| | Range | 0~65535 | | | Default | 300 | Unit | *Command* |
| | Structure | VAR | Type | UINT16 | Mapping | RPDO | Access | RO |
| | To set the time between arrival to the output of INP (In position) signal. | | | | | | | |

| Index 606Bh | Label | Velocity Demand Value | | | Mode | CSV | | PV |
|---|---|---|---|---|---|---|---|---|
| | Range | -2147483648~2147483647 | | | Default | 0 | Unit | *Command/s* |
| | Structure | VAR | Type | INT32 | Mapping | TPDO | Access | RO |
| | Show user set velocity demand value. | | | | | | | |

| Index 606Ch | Label | Velocity Actual Value | | | Mode | F | | |
|---|---|---|---|---|---|---|---|---|
| | Range | -2147483648~2147483647 | | | Default | 0 | Unit | *Command/s* |
| | Structure | VAR | Type | INT16 | Mapping | TPDO | Access | RO |
| | Show actual velocity value. | | | | | | | |

| Index 606Dh | Label | Velocity window | | | Mode | CSV | | PV |
|---|---|---|---|---|---|---|---|---|
| | Range | 0~65535 | | | Default | 10 | Unit | *Command/s* |
| | Structure | VAR | Type | UINT16 | Mapping | RPDO | Access | RO |
| | Set the range of velocity | | | | | | | |

| Index 606Eh | Label | Velocity window time | | | Mode | CSV | | PV |
|---|---|---|---|---|---|---|---|---|
| | Range | 0~65535 | | | Default | 0 | Unit | ms |
| | Structure | VAR | Type | UINT16 | Mapping | RPDO | Access | RO |
| | To set the time between velocity reached and status word set to TargetReached. | | | | | | | |

| Index 606Fh | Label | Velocity Threshold | | | Mode | CSV | | PV |
|---|---|---|---|---|---|---|---|---|
| | Range | 0~65535 | | | Default | 10 | Unit | *Command/s* |
| | Structure | VAR | Type | UINT16 | Mapping | RPDO | Access | RO |
| | To set to zero-speed range. | | | | | | | |

| Index 6070h | Label | Velocity Threshold Time | | | Mode | CSV | | PV |
|---|---|---|---|---|---|---|---|---|
| | Range | 0~65535 | | | Default | 100 | Unit | ms |
| | Structure | VAR | Type | UINT16 | Mapping | RPDO | Access | RO |
| | To set the time until status word – zero speed detection is canceled. | | | | | | | |

| Index 6071h | Label | Target torque | | | Mode | CST | | PT |
|---|---|---|---|---|---|---|---|---|
| | Range | -32768~32767 | | | Default | 100 | Unit | 0.1% |
| | Structure | VAR | Type | INT16 | Mapping | RPDO | Access | RW |
| | To set target torque for profile and cyclic torque mode. | | | | | | | |

| Index 6072h | Label | Maximum torque | | | Mode | F | | |
|---|---|---|---|---|---|---|---|---|
| | Range | 0~65535 | | | Default | 3000 | Unit | 0.1% |
| | Structure | VAR | Type | UINT16 | Mapping | RPDO | Access | RW |
| | To set max torque for servo drive, limited by motor's highest torque. | | | | | | | |

| Index 6073h | Label | Maximum current | | | Mode | F | | |
|---|---|---|---|---|---|---|---|---|
| | Range | 0~65535 | | | Default | 3000 | Unit | 0.1% |
| | Structure | VAR | Type | UINT16 | Mapping | TPDO | Access | RO |
| | To set max. current for servo driver. | | | | | | | |

| Index 6074h | Label | Torque Demand | | | Mode | F | | |
|---|---|---|---|---|---|---|---|---|
| | Range | -32768~32767 | | | Default | 0 | Unit | 0.1% |
| | Structure | VAR | Type | INT16 | Mapping | TPDO | Access | RO |
| | Internal command torque | | | | | | | |

| Index 6075h | Label | Motor Rated Current | | | Mode | F | | |
|---|---|---|---|---|---|---|---|---|
| | Range | 0~2147483647 | | | Default | 3000 | Unit | mA |
| | Structure | VAR | Type | INT32 | Mapping | TPDO | Access | RO |
| | Shows motor rated current. | | | | | | | |

| Index 6076h | Label | Motor Rated Torque | | | Mode | F | | |
|---|---|---|---|---|---|---|---|---|
| | Range | 0~2147483647 | | | Default | 3000 | Unit | mN.m |
| | Structure | VAR | Type | INT32 | Mapping | TPDO | Access | RO |
| | Shows motor rated torque. | | | | | | | |

| Index 6077h | Label | Torque Actual Value | | | Mode | F | | |
|---|---|---|---|---|---|---|---|---|
| | Range | -32768~32767 | | | Default | 0 | Unit | 0.1% |
| | Structure | VAR | Type | INT16 | Mapping | TPDO | Access | RO |
| | Shows servo driver actual torque feedback | | | | | | | |

| Index 6078h | Label | Current Actual Value | | | Mode | F | | |
|---|---|---|---|---|---|---|---|---|
| | Range | -32768~32767 | | | Default | 0 | Unit | 0.1% |
| | Structure | VAR | Type | INT16 | Mapping | TPDO | Access | RO |
| | Shows servo drive actual current value | | | | | | | |

| Index 6079h | Label | DC Link Circuit Voltage | | | Mode | F | | |
|---|---|---|---|---|---|---|---|---|
| | Range | 0~2147483647 | | | Default | 0 | Unit | mV |
| | Structure | VAR | Type | UINT32 | Mapping | TPDO | Access | RO |
| | Shows DC bus voltage across P, N terminals | | | | | | | |

| Index 607Ah | Label | Target position | | | Mode | PP | | CSP |
|---|---|---|---|---|---|---|---|---|
| | Range | -2147483647~2147483647 | | | Default | 0 | Unit | *command* |
| | Structure | VAR | Type | INT32 | Mapping | RPDO | Access | RW |
| | To set the target position under profile and cyclic position mode. | | | | | | | |

| Index 607Ch | Label | Home Offset | | | Mode | HM | | |
|---|---|---|---|---|---|---|---|---|
| | Range | -2147483647~2147483647 | | | Default | 0 | Unit | *command* |
| | Structure | VAR | Type | INT32 | Mapping | RPDO | Access | RW |
| | To set position offset to compensate for the deviation of mechanical origin from motor origin under homing | | | | | | | |

| Index 607Dh-01 | Label | Min Position Limit | | | Mode | PP | | CSP |
|---|---|---|---|---|---|---|---|---|
| | Range | -2147483647~2147483647 | | | Default | 0 | Unit | *command* |
| | Structure | VAR | Type | INT32 | Mapping | RPDO | Access | RW |
| | To set lower limit with calculated position and actual position using absolute position after homing. | | | | | | | |

| Index 607Dh-01 | Label | Max Position Limit | | | Mode | PP | | CSP |
|---|---|---|---|---|---|---|---|---|
| | Range | -2147483647~2147483647 | | | Default | 0 | Unit | *command* |
| | Structure | VAR | Type | INT32 | Mapping | RPDO | Access | RW |
| | To set upper limit with calculated position and actual position using absolute position after homing. | | | | | | | |

| Index 607Eh | Label | Polarity | | | Mode | F | | |
|---|---|---|---|---|---|---|---|---|
| | Range | 0x0 – 0xFF | | | Default | 0x0 | Unit | *command* |
| | Structure | VAR | Type | UINT8 | Mapping | RPDO | Access | RW |

Set input polarity of the command.

| Mode | | Set Value |
|---|---|---|
| Position mode | PP<br>HM<br>CSP | 0：Rotate in the same direction as the position command<br>128：Rotate in the opposite direction to the position command |
| Velocity mode | PV<br>CSV | 0：Rotate in the same direction as the position command<br>64：Rotate in the opposite direction to the position command |
| Torque mode | PT<br>CST | 0：Rotate in the same direction as the position command<br>32：Rotate in the opposite direction to the position command |
| ALL mode | | 0：Rotate in the same direction as the position command<br>224：Rotate in the opposite direction to the position command |

| Index 607Fh | Label | Max Profile Velocity | | | Mode | PP | HM | PV | CST |
|---|---|---|---|---|---|---|---|---|---|
| | Range | 0~2147483647 | | | Default | 2147483647 | Unit | *Command/s* | |
| | Structure | VAR | Type | UINT32 | Mapping | RPDO | Access | RW | |
| To set max allowable velocity. Limited by 6080 | | | | | | | | | |

| Index 6080h | Label | Max Motor Speed | | | Mode | F | | |
|---|---|---|---|---|---|---|---|---|
| | Range | 0~2147483647 | | | Default | 6000 | Unit | r/min |
| | Structure | VAR | Type | UINT32 | Mapping | RPDO | Access | RW |
| To set the maximum allowable motor velocity. | | | | | | | | |

| Index 6081h | Label | Profile velocity | | | Mode | PP | | |
|---|---|---|---|---|---|---|---|---|
| | Range | 0~2147483647 | | | Default | 10000 | Unit | *Command/s* |
| | Structure | VAR | Type | UINT32 | Mapping | RPDO | Access | RW |
| To set target velocity. Limited by 607Fh. | | | | | | | | |

| Index 6083h | Label | Profile acceleration | | | Mode | PP | | PV |
|---|---|---|---|---|---|---|---|---|
| | Range | 1~2147483647 | | | Default | 10000 | Unit | *command/s*$^2$ |
| | Structure | VAR | Type | UINT32 | Mapping | RPDO | Access | RW |
| To set motor acceleration | | | | | | | | |

| Index 6084h | Label | Profile deceleration | | | Mode | PP | | PV |
|---|---|---|---|---|---|---|---|---|
| | Range | 1~2147483647 | | | Default | 10000 | Unit | *command*/s$^2$ |
| | Structure | VAR | Type | UINT32 | Mapping | RPDO | Access | RW |
| | To set motor deceleration | | | | | | | |

| Index 6085h | Label | Quick Stop Deceleration | | | Mode | CSP | CSV | PP | PV | HM |
|---|---|---|---|---|---|---|---|---|---|---|
| | Range | 1~2147483647 | | | Default | 10000000 | Unit | | *command*/s$^2$ | |
| | Structure | VAR | Type | UINT32 | Mapping | RPDO | Access | RW | | |
| | To set the deceleration during an emergency stop | | | | | | | | | |

| Index 6087h | Label | Torque slope | | | Mode | PT | | |
|---|---|---|---|---|---|---|---|---|
| | Range | 1~2147483647 | | | Default | 5000 | Unit | 0.1%/s |
| | Structure | VAR | Type | UINT32 | Mapping | RPDO | Access | RW |
| | To set values for tendency torque command | | | | | | | |

| Index 608Fh-01 | Label | Encoder Increments | | | Mode | PT | | |
|---|---|---|---|---|---|---|---|---|
| | Range | 0~2147483647 | | | Default | 0 | Unit | *encoder* |
| | Structure | VAR | Type | UINT32 | Mapping | TPDO | Access | RO |
| | To set encoder resolution | | | | | | | |

| Index 6091h-01 | Label | Motor Revolutions | | | Mode | F | | |
|---|---|---|---|---|---|---|---|---|
| | Range | 1~2147483647 | | | Default | 1 | Unit | r |
| | Structure | VAR | Type | UINT32 | Mapping | RPDO | Access | RW |
| | To set electronic gear ratio numerator | | | | | | | |

| Index 6091h-02 | Label | Shaft Revolutions | | | Mode | F | | |
|---|---|---|---|---|---|---|---|---|
| | Range | 1~2147483647 | | | Default | 1 | Unit | r |
| | Structure | VAR | Type | UINT32 | Mapping | RPDO | Access | RW |
| | To set electronic gear ratio denominator | | | | | | | |

| Index 6092h-01 | Label | Feed | | | Mode | F | | |
|---|---|---|---|---|---|---|---|---|
| | Range | 1~2147483647 | | | Default | 10000 | Unit | *Command*/r |
| | Structure | VAR | Type | UINT32 | Mapping | RPDO | Access | RW |
| | If 6092h-01(Feed constant) is not equal to 608Fh(Position encoder resolution), then:<br>Electronic gear ratio = Encoder increments / 6092h-01<br><br>If 6092h-01(Feed constant) is equal to 608Fh(Position encoder resolution), then:<br>Electronic gear ratio = 6091-01 / 6092h-01 | | | | | | | |

| Index 6098h | Label | Homing method | | | Mode | HM | | |
|---|---|---|---|---|---|---|---|---|
| | Range | -6 ~ 37 | | | Default | 19 | Unit | - |
| | Structure | VAR | Type | UINT8 | Mapping | RPDO | Access | RW |

The table below describes the velocity, direction and stopping conditions of each homing methods.

| Value | Description | | |
|---|---|---|---|
| | Velocity | Direction | Stop |
| -6 | Low | Negative | When torque reached |
| -5 | Low | Positive | When torque reached |
| -4 | High | Negative | Inversed when torque reached, after torque is gone |
| -3 | High | Positive | Inversed when torque reached, after torque is gone |
| -2 | High | Negative | Inversed when torque reached, received 1st Z-signal after torque is gone |
| -1 | High | Positive | Inversed when torque reached, received 1st Z-signal after torque is gone |

| | Direction | Deceleration point | Home | Before Z-signal |
|---|---|---|---|---|
| 1 | Negative | Negative limit switch | Motor Z-signal | Negative limit switch falling edge |
| 2 | Positive | Positive limit switch | Motor Z-signal | Positive limit switch falling edge |
| 3 | Positive | Homing switch | Motor Z-signal | Falling edge on same side of homing switch |
| 4 | Positive | Homing switch | Motor Z-signal | Rising edge on same side of homing switch |
| 5 | Negative | Homing switch | Motor Z-signal | Falling edge on same side of homing switch |
| 6 | Negative | Homing switch | Motor Z-signal | Rising edge on same side of homing switch |
| 7 | Positive | Homing switch | Motor Z-signal | Falling edge on same side of homing switch |
| 8 | Positive | Homing switch | Motor Z-signal | Rising edge on same side of homing switch |
| 9 | Positive | Homing switch | Motor Z-signal | Rising edge on same side of homing switch |
| 10 | Positive | Homing switch | Motor Z-signal | Falling edge on same side of homing switch |
| 11 | Negative | Homing switch | Motor Z-signal | Falling edge on same side of homing switch |
| 12 | Negative | Homing switch | Motor Z-signal | Rising edge on same side of homing switch |
| 13 | Negative | Homing switch | Motor Z-signal on other side of homing switch | Rising edge on other side of homing switch |
| 14 | Negative | Homing switch | Motor Z-signal on other side of homing switch | Falling edge on other side of homing switch |
| 15 | | | | |
| 16 | | | | |
| 17-32 | Similar with 1-14, but deceleration point = homing point | | | |
| 33 | Home in negative direction, Homing point = motor Z-signal | | | |
| 34 | Home in positive direction, Homing point = motor Z-signal | | | |
| 35-37 | Set current position as homing point | | | |

| Index 6099h-01 | Label | Speed During Search For Switch | | | Mode | HM | | |
|---|---|---|---|---|---|---|---|---|
| | Range | 0~2147483647 | | | Default | 10000 | Unit | *Command/s* |
| | Structure | VAR | Type | UINT32 | Mapping | RPDO | Access | RW |
| | To set the speed used in homing | | | | | | | |

| Index 6099h-01 | Label | Speed During Search For Zero | | | Mode | HM | | |
|---|---|---|---|---|---|---|---|---|
| | Range | 0~2147483647 | | | Default | 5000 | Unit | *Command/s* |
| | Structure | VAR | Type | UINT32 | Mapping | RPDO | Access | RW |
| | To set the speed used in homing | | | | | | | |

| Index 609Ah | Label | Homing acceleration | | | Mode | HM | | |
|---|---|---|---|---|---|---|---|---|
| | Range | 1~2147483647 | | | Default | 5000 | Unit | *Command/s*$^2$ |
| | Structure | VAR | Type | UINT32 | Mapping | TPDO | Access | RO |
| | To set acceleration and deceleration used in homing | | | | | | | |

| Index 60B0h | Label | Position Offset | | | Mode | CSP | | |
|---|---|---|---|---|---|---|---|---|
| | Range | -2147483647~2147483647 | | | Default | 0 | Unit | *Command* |
| | Structure | VAR | Type | INT32 | Mapping | TPDO | Access | RO |
| | To add offset to target position | | | | | | | |

| Index 60B1h | Label | Velocity Offset | | | Mode | CSP | CSV | PP | PV | HM |
|---|---|---|---|---|---|---|---|---|---|---|
| | Range | -2147483647~2147483647 | | | Default | 0 | Unit | *Command/s* | | |
| | Structure | VAR | Type | INT32 | Mapping | TPDO | Access | RO | | |
| | To add offset to velocity demand value. | | | | | | | | | |

| Index 60B2h | Label | Torque Offset | | | Mode | F | | |
|---|---|---|---|---|---|---|---|---|
| | Range | -32768~32767 | | | Default | 0 | Unit | 0.1% |
| | Structure | VAR | Type | INT32 | Mapping | TPDO | Access | RO |
| | To add offset to torque demand value. | | | | | | | |

| Index 60B8h | Label | Touch Probe function | | | Mode | F | | |
|---|---|---|---|---|---|---|---|---|
| | Range | 0x0-0xFFFF | | | Default | 0x0 | Unit | - |
| | Structure | VAR | Type | UINT16 | Mapping | RPDO | Access | RW |

| Bit | Description | Details |
|---|---|---|
| 0 | Probe 1 | 0--Disable<br>1--Enable |
| 1 | Probe 1 trigger mode | 0--Single trigger, triggered only when trigger signal is valid<br>1—Continuous trigger |
| 2 | Probe 1 trigger signal selection | 0—Probe 1 captured<br>1--Z signal |
| 3 | Reserved | - |
| 4 | Probe 1 rising edge enabled | 0--Disable<br>1--Enable |
| 5 | Probe 1 falling edge enabled | 0--Disable<br>1--Enable |
| 6-7 | Reserved | - |
| 8 | Probe 2 | 0--Disable<br>1--Enable |
| 9 | Probe 2 trigger mode | 0--Single trigger, triggered only when trigger signal is valid<br>1—Continuous trigger |
| 10 | Probe 2 trigger signal selection | 0—Probe 2 captured<br>1--Z signal |
| 11 | Reserved | - |
| 12 | Probe 2 rising edge enabled | 0—Rising edge not latched<br>1—Rising edge latched |
| 13 | Probe 2 falling edge enabled | 0—Falling edge not latched<br>1—Falling edge latched |
| 14-15 | Reserved | - |

| Index 60B9h | Label | Touch Probe status | | | Mode | F | | |
|---|---|---|---|---|---|---|---|---|
| | Range | 0x0-0xFFFF | | | Default | 0x0 | Unit | - |
| | Structure | VAR | Type | UINT16 | Mapping | TPDO | Access | RO |

| Bit | Definition | Details |
|---|---|---|
| 0 | Probe 1 | 0--Disable<br>1--Enable |
| 1 | Probe 1 rising edge latching | 0—Rising edge not latched<br>1—Rising edge latched |
| 2 | Probe 1 falling edge latching | 0—Falling edge not latched<br>1—Falling edge latched |
| 3-5 | - | - |
| 6-7 | - | - |
| 8 | Probe 2 | 0--Disable<br>1--Enable |
| 9 | Probe 2 rising edge latching | 0—Rising edge not latched<br>1—Rising edge latched |
| 10 | Probe 2 falling edge latching | 0—Falling edge not latched<br>1—Falling edge latched |
| 11-13 | - | - |
| 14-15 | - | - |

| Index 60BAh | Label | Touch Probe 1 Positive Position | | | Mode | F | | |
|---|---|---|---|---|---|---|---|---|
| | Range | -2147483647~2147483647 | | | Default | 0 | Unit | *Command* |
| | Structure | VAR | Type | INT32 | Mapping | TPDO | Access | RO |
| | Shows position feedback at rising edge of probe 1 signal | | | | | | | |

| Index 60BBh | Label | Touch Probe 1 Negative Position | | | Mode | F | | |
|---|---|---|---|---|---|---|---|---|
| | Range | -2147483647~2147483647 | | | Default | 0 | Unit | *Command* |
| | Structure | VAR | Type | INT32 | Mapping | TPDO | Access | RO |
| | Shows position feedback at falling edge of probe 1 signal | | | | | | | |

| Index 60BCh | Label | Touch Probe 2 Positive Position | | | Mode | F | | |
|---|---|---|---|---|---|---|---|---|
| | Range | -2147483647~2147483647 | | | Default | 0 | Unit | *Command* |
| | Structure | VAR | Type | INT32 | Mapping | TPDO | Access | RO |
| | Shows position feedback at rising edge of probe 2 signal | | | | | | | |

| Index 60BDh | Label | Touch Probe 2 Negative Position | | | Mode | F | | |
|---|---|---|---|---|---|---|---|---|
| | Range | -2147483647~2147483647 | | | Default | 0 | Unit | *Command* |
| | Structure | VAR | Type | INT32 | Mapping | TPDO | Access | RO |
| | Shows position feedback at falling edge of probe 2 signal | | | | | | | |

| Index 60C5h | Label | Max Acceleration | | | Mode | F | | |
|---|---|---|---|---|---|---|---|---|
| | Range | 1~2147483647 | | | Default | 100000000 | Unit | *Command*/s$^2$ |
| | Structure | VAR | Type | UINT32 | Mapping | RPDO | Access | RW |
| | To set upper limit of acceleration. | | | | | | | |

| Index 60C6h | Label | Max Deceleration | | | Mode | F | | |
|---|---|---|---|---|---|---|---|---|
| | Range | 1~2147483647 | | | Default | 100000000 | Unit | *Command*/s$^2$ |
| | Structure | VAR | Type | UINT32 | Mapping | RPDO | Access | RW |
| | To set upper limit of deceleration. | | | | | | | |

| Index 60D5h | Label | Touch Probe 1 Positive Edge Counter | | | Mode | F | | |
|---|---|---|---|---|---|---|---|---|
| | Range | 0~65535 | | | Default | 0 | Unit | - |
| | Structure | VAR | Type | UINT16 | Mapping | TPDO | Access | RO |
| | Shows the number of times probe 1 rising edge latched. | | | | | | | |

| Index 60D6h | Label | Touch Probe 1 Negative Edge Counter | | | Mode | F | | |
|---|---|---|---|---|---|---|---|---|
| | Range | 0~65535 | | | Default | 0 | Unit | - |
| | Structure | VAR | Type | UINT16 | Mapping | TPDO | Access | RO |
| | Shows the number of times probe 1 falling edge latched. | | | | | | | |

| Index 60D7h | Label | Touch Probe 2 Positive Edge Counter | | | Mode | F | | |
|---|---|---|---|---|---|---|---|---|
| | Range | 0~65535 | | | Default | 0 | Unit | - |
| | Structure | VAR | Type | UINT16 | Mapping | TPDO | Access | RO |
| | Shows the number of times probe 2 rising edge latched. | | | | | | | |

| Index 60D7h | Label | Touch Probe 2 Negative Edge Counter | | | Mode | F | | |
|---|---|---|---|---|---|---|---|---|
| | Range | 0~65535 | | | Default | 0 | Unit | - |
| | Structure | VAR | Type | UINT16 | Mapping | TPDO | Access | RO |
| | Shows the number of times probe 2 falling edge latched. | | | | | | | |

| Index 60E0h | Label | Positive Torque Limit | | | Mode | F | | |
|---|---|---|---|---|---|---|---|---|
| | Range | 0~65535 | | | Default | 3000 | Unit | 0.1% |
| | Structure | VAR | Type | UINT16 | Mapping | RPDO | Access | RW |
| | To set the maximum torque of servo drive in positive direction | | | | | | | |

| Index 60E1h | Label | Negative Torque Limit | | | Mode | F | | |
|---|---|---|---|---|---|---|---|---|
| | Range | 0~65535 | | | Default | 3000 | Unit | 0.1% |
| | Structure | VAR | Type | UINT16 | Mapping | RPDO | Access | RW |
| | To set the maximum torque of servo drive in negative direction | | | | | | | |

| Index 60F4h | Label | Following Error Actual Value | | | Mode | CSP | PP | HM |
|---|---|---|---|---|---|---|---|---|
| | Range | -2147483647~2147483647 | | | Default | 0 | Unit | *Command* |
| | Structure | VAR | Type | INT32 | Mapping | TPDO | Access | RO |
| | Shows position following error | | | | | | | |

| Index 60FAh | Label | Control Effort | | | Mode | CSP | PP | HM |
|---|---|---|---|---|---|---|---|---|
| | Range | -2147483647~2147483647 | | | Default | 0 | Unit | *Command/s* |
| | Structure | VAR | Type | INT32 | Mapping | TPDO | Access | RO |
| | Shows velocity demand value(Position loop output) | | | | | | | |

| Index 60FCh | Label | Position Demand Internal Value | | | Mode | CSP | PP | HM |
|---|---|---|---|---|---|---|---|---|
| | Range | -2147483647~2147483647 | | | Default | 0 | Unit | *encoder* |
| | Structure | VAR | Type | INT32 | Mapping | TPDO | Access | RO |
| | Shows position demand value of servo drive. | | | | | | | |

| Index 60FDh | Label | Digital Inputs | | | Mode | F | | |
|---|---|---|---|---|---|---|---|---|
| | Range | 0x0~0x7FFFFFFF | | | Default | 0 | Unit | - |
| | Structure | VAR | Type | UINT32 | Mapping | TPDO | Access | RO |

The bits of 60FDh object are functionally defined as follow:

| Bit31 | Bit30 | Bit29 | Bit28 | Bit27 | Bit26 | Bit25 | Bit24 |
|---|---|---|---|---|---|---|---|
| Z signal | *Reserved* | *Reserved* | *Reserved* | Probe 2 | Probe 1 | BRAKE | INP/V-COIN /TLC |
| **Bit23** | **Bit22** | **Bit21** | **Bit20** | **Bit19** | **Bit18** | **Bit17** | **Bit16** |
| E-STOP | *Reserved* | *Reserved* | *Reserved* | *Reserved* | *Reserved* | DI14 | DI13 |
| **Bit15** | **Bit14** | **Bit13** | **Bit12** | **Bit11** | **Bit10** | **Bit9** | **Bit8** |
| DI12 | DI11 | DI10 | DI9 | DI8 | DI7 | DI6 | DI5 |
| **Bit7** | **Bit6** | **Bit5** | **Bit4** | **Bit3** | **Bit2** | **Bit1** | **Bit0** |
| DI4 | DI3 | DI2 | DI1 | *Reserved* | HOME | POT | NOT |

| Index 60FEh-01 | Label | Physical Outputs | | | Mode | F | | |
|---|---|---|---|---|---|---|---|---|
| | Range | 0x0~0x7FFFFFFF | | | Default | 0x0 | Unit | - |
| | Structure | ARRAY | Type | UINT32 | Mapping | RPDO | Access | RW |

The bits of 60FEh object are functionally defined as follow:

| Bit / Sub-index | 31~21 | 21 | 20 | 19 | 18 | 17 | 16 | 15~0 |
|---|---|---|---|---|---|---|---|---|
| 01h | *Reserved* | DO6 valid | DO5 valid | DO4 valid | DO3 valid | DO2 valid | DO1 valid | *Reserved* |

| Index 60FEh-02 | Label | Bit Mask | | | Mode | F | | |
|---|---|---|---|---|---|---|---|---|
| | Range | 0x0~0x7FFFFFFF | | | Default | 0xFFFF0000 | Unit | - |
| | Structure | ARRAY | Type | UINT32 | Mapping | RPDO | Access | RW |

The bits of a 60FEh object are functionally defined as follow:

| Bit / Sub-index | 31~21 | 21 | 20 | 19 | 18 | 17 | 16 | 15~0 |
|---|---|---|---|---|---|---|---|---|
| 02h | *Reserved* | DO6 enabled | DO5 enabled | DO4 enabled | DO3 enabled | DO2 enabled | DO1 enabled | *Reserved* |

| Index 60FFh | Label | Target velocity | | | Mode | CSV | | PV |
|---|---|---|---|---|---|---|---|---|
| | Range | -2147483647~2147483647 | | | Default | 0 | Unit | *Command/s* |
| | Structure | VAR | Type | INT32 | Mapping | RPDO | Access | RW |

Shows set target velocity. Limited by 6080h

| Index 6502h | Label | Supported Drive Modes | | | Mode | F | | |
|---|---|---|---|---|---|---|---|---|
| | Range | 0x0~0x7FFFFFFF | | | Default | 0x0 | Unit | - |
| | Structure | ARRAY | Type | UINT32 | Mapping | TPDO | Access | RO |

Shows the control modes supported by the servo drive.

# Chapter 4 Servo Drive Operation

## 4.1 Get Started with Driver Operation

### 4.1.1 Checklist before operation

| No. | Description |
|---|---|
| Power supply | |
| 1 | The voltage of main and control circuit power supply is within rated values. |
| 2 | Power supply polarity is rightly connected. |
| Wiring | |
| 1 | Power supply input is rightly connected. |
| 2 | Driver's power output UVW matches UVW terminals on the main circuit. |
| 3 | No short circuit of driver's input and output UVW terminals. |
| 4 | Signal cables are correctly and well connected. |
| 5 | Drivers and motors are connected to ground |
| 6 | All cables under stress within recommended range. |
| 7 | No foreign conductive objects inside/outside the driver. |
| Mechanical | |
| 1 | Driver and external holding brake are not place near combustibles. |
| 2 | Installations of driver, motor and axis is fastened. |
| 3 | Movement of motors and mechanical axes are not obstructed. |

### 4.1.2 Power On

Connect 24-70VDC power supply into control circuit power supply L1C, L2C.

### 4.1.3 Trial Run

Servo drive must be disabled before performing trial run. For safety precautions, please JOG under minimal velocity.

**Related Parameters**

| No. | Parameters | Label | Set value | Unit |
|---|---|---|---|---|
| 1 | P00.01 | Control mode settings | 9 | / |
| 2 | P06.04 | JOG trial run command velocity | User defined | r/min |
| 3 | P06.25 | Trial run acc-/deceleration time | User defined | ms/1000rpm |

- *Please make sure the mechanical axis is within the range of motion and travelled distance should not be too long to avoid collision.*
- *Set optimal velocity and acceleration for trial run (not too high!)*
- *Do not modify any gain related parameters during motion to avoid vibration.*

Please refer to "Section 3.5 AF_Vog Trial Run" for detailed explanations on how to perform trial run using front panel operation

### 4.1.4 Motor rotational direction settings

Motor rotational direction can be changed through P00.06 without changing the polarity of the input command.

| P00.06 | Name | Command polarity inversion | | | Mode | | | | | | | F |
|---|---|---|---|---|---|---|---|---|---|---|---|---|
| | Range | 0 ~ 1 | Unit | — | Default | 0 | Index | | 2006h | | | |
| | Activation | After restart | | | | | | | | | | |

Used to change the rotational direction of the motor.

| Set value | Details |
|---|---|
| 0 | Polarity of the command is not inversed. The direction of rotation is consistent with the polarity of command. |
| 1 | Polarity of command is inversed. The direction of rotation is opposite to the polarity of command. |

Note: Rotational direction of the motor is recommended to be set through object dictionary 607E. However, P00.06 has higher priority than object dictionary 607E. 607E only takes effect when P00.06 = 0.

### 4.1.5 Holding Brake Settings

Holding brake is designed to hold the axis in position to prevent it from sliding due to applied external forces when the driver is disabled. Holding brake is optional and depends on the model of motor chosen for the application.

- *Please only use holding brake when motor is stopped. No applicable when motor is in motion.*
- *Holding brake coil has no polarity.*
- *Motor should be disabled after stopped.*
- *There is some noise when motors with brake are in motion but that doesn't affect its functionality.*
- *Magnetic sensors might be affected when the holding brake is on. Please be aware.*

## Holding brake wiring diagram

1. Using internal holding brake output port X3 (Easy wiring, no need for an extra relay)

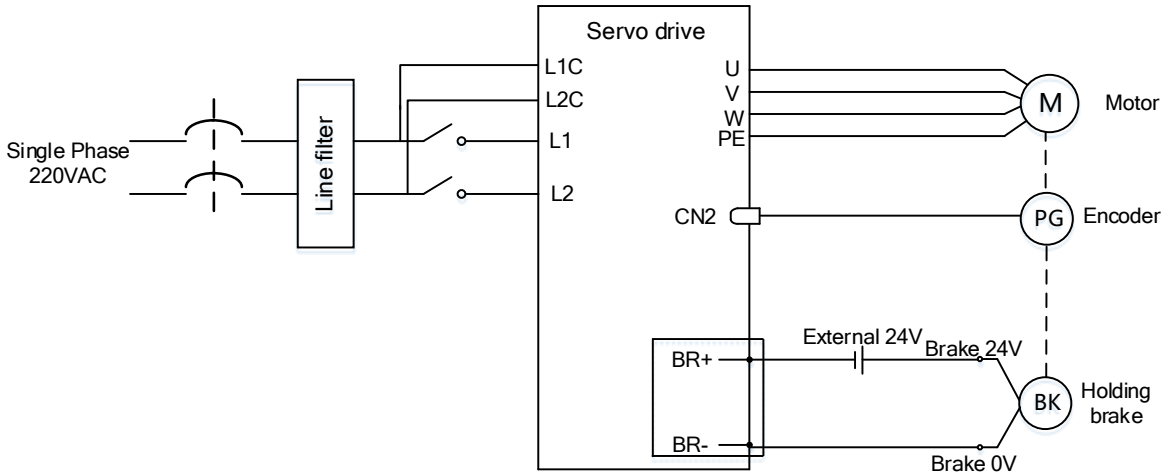


2.Connect to the DO(BRK+/BRK-)

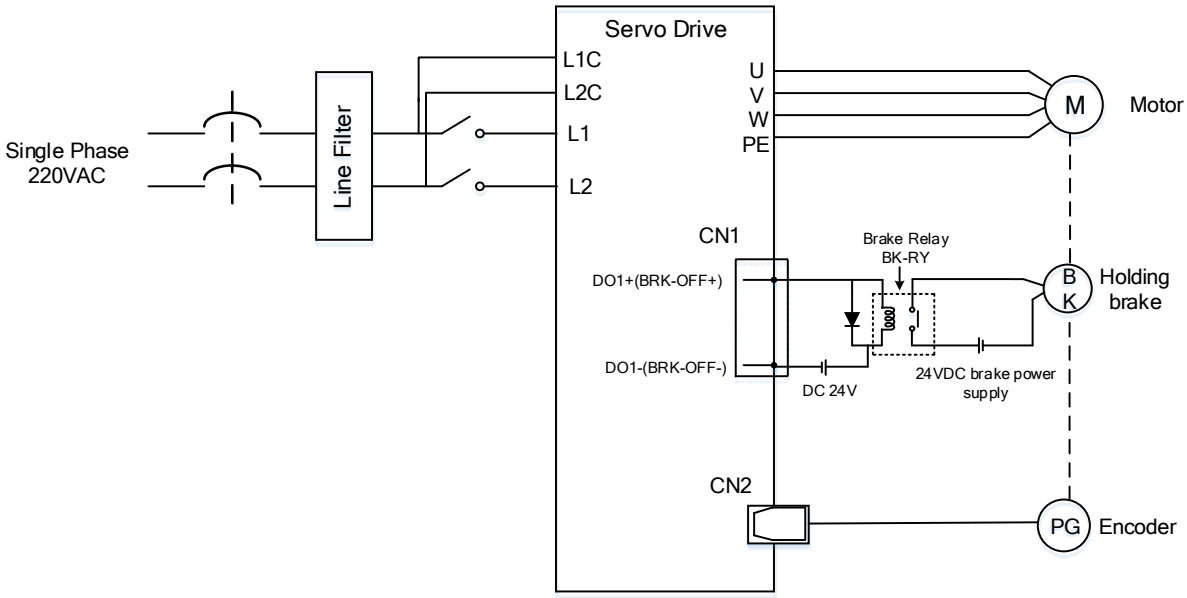


## 4.1.6 Servo Running

1. Enable servo driver

Check if CN3/CN4 is connected properly. Servo driver is in ready mode. Motor is stopped and holding brake is activated.

2. Motor starts to move after command input

i. On first time operation, please use suitable command at low velocity. Confirm if motor is working normally.

ii. Check if motor rotational direction is correct. If not, please check input command or parameter settings. (P00.06).

iii. If motor is working normally, motion data such as motor rotational velocity “d01SP”

and actual torque feedback “d04tr” can be monitored on the front panel or through Motion Studio.

3. Power on sequence diagram

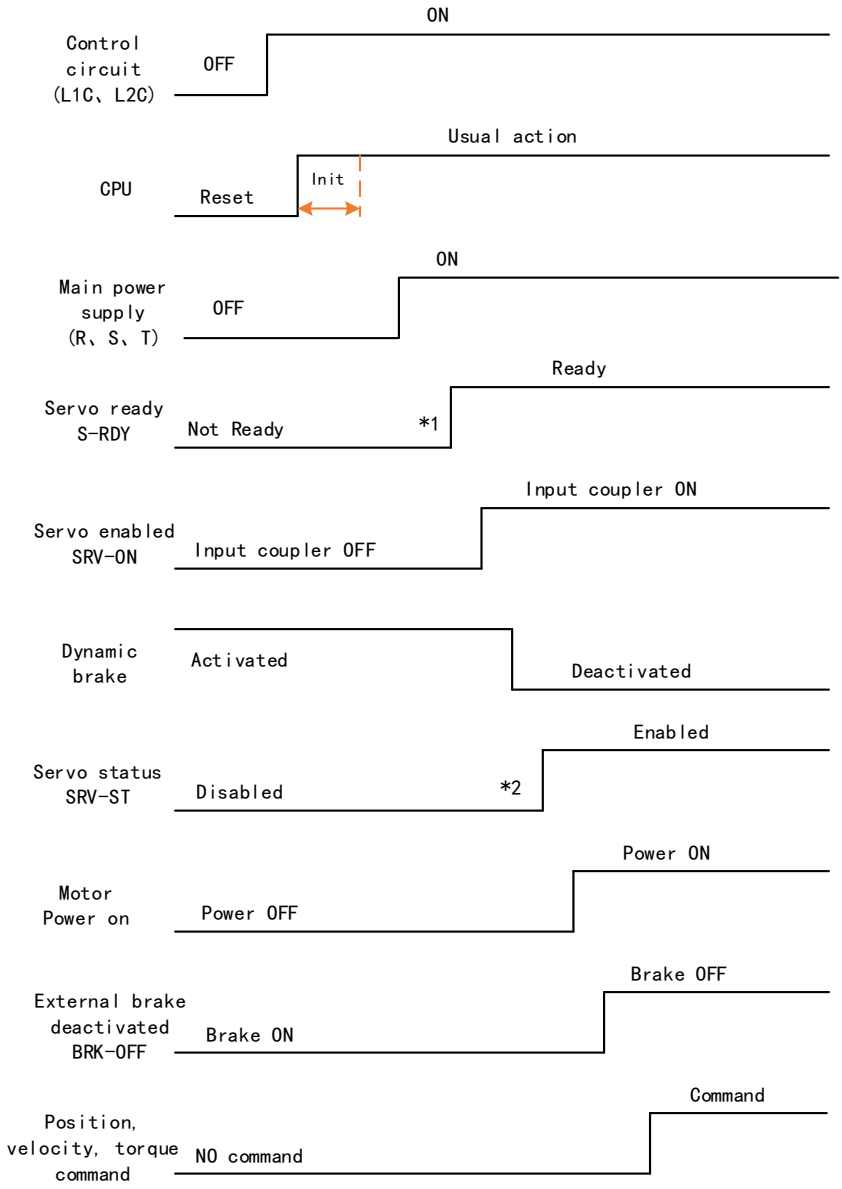


Please enter servo status, position, velocity, torque command as sequence diagram above.

*** 1. S-RDY signal is given after CPU initialization and main power supply powered on.*

*2. SRV-ST signal is received when servo driver is enabled. Command input is not allowed yet.*

### 4.1.7 Servo stop

Servo stopping are of 2 different methods: Servo braking method & free stopping method.

| Stopping method | Description | Details |
|---|---|---|
| Servo braking | Servo driver delivers braking torque in opposite direction | Quick stopping but mechanical impact might exist |
| Free stopping | Motor power cut off. Free to move until velocity = 0. Affected inertia, friction and other factors | Smooth deceleration, low mechanical impact but slow stopping |

| Stopping status | Status after stopped |
|---|---|
| Free running | Motor is powered off, rotor is free to rotate |
| Holding brake stopping | Motor axis is locked, cannot rotate freely |

## Motor stopping（Servo disabled）- Sequence Diagram

Servo stopping method. Status after stopping: Free running

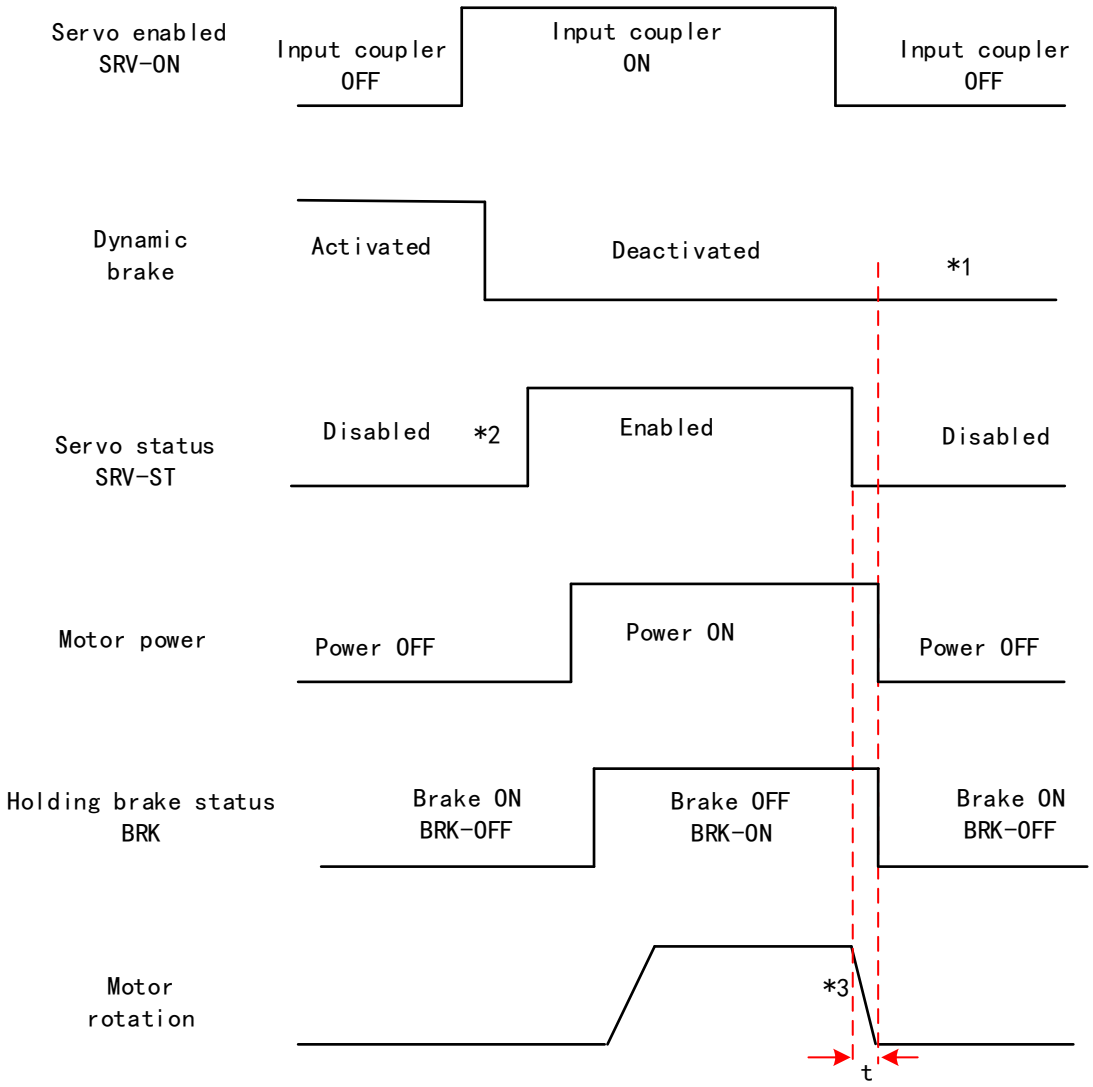

Free stopping method. Status after stopping: Free running

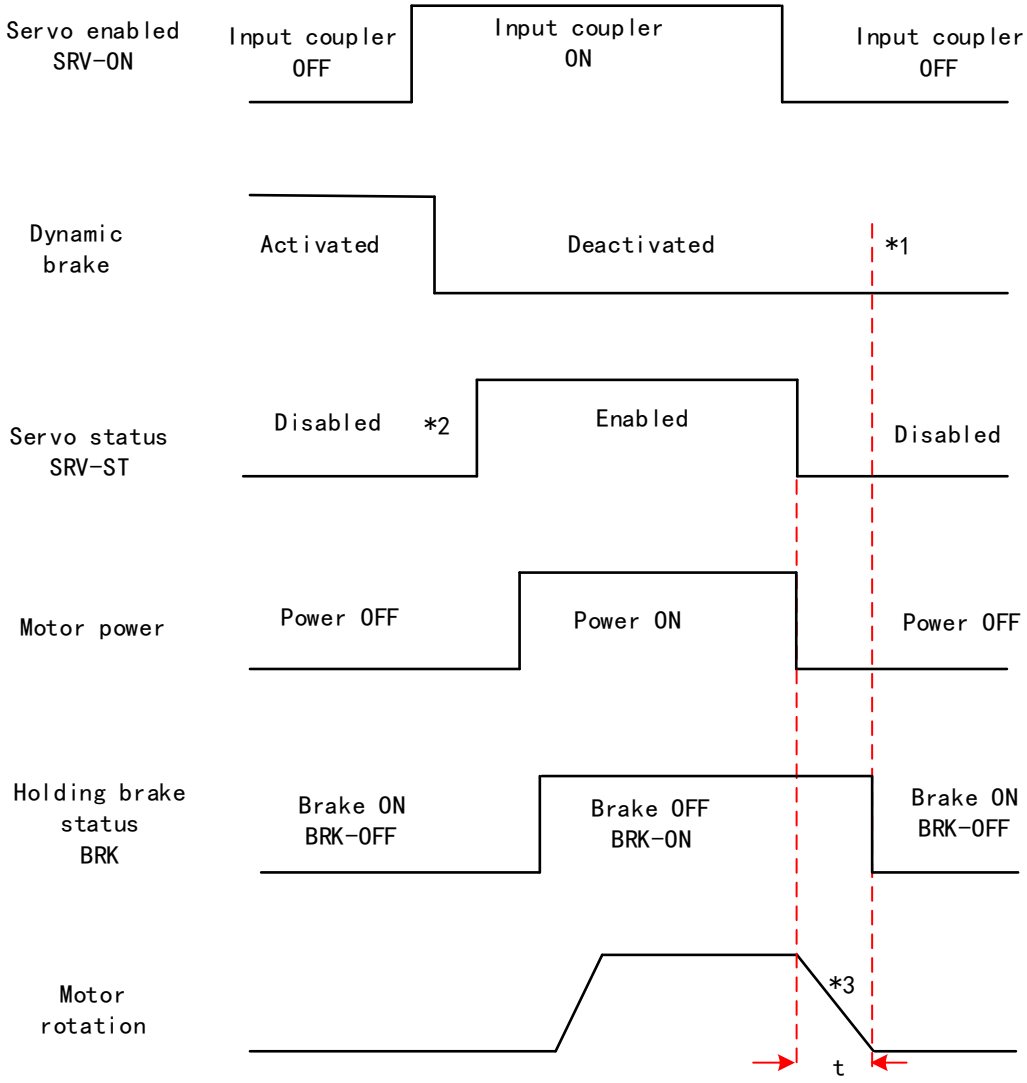

*** 1. Status after stopping is as defined in P05.06.*

*2. SRV-ST signal is received when servo driver is enabled. Command input is not allowed yet.*

*3. Servo stopping method is as defined in P05.06; braking torque in opposite direction to decelerate the motor is as defined in P05.11. Deceleration time t is determined by whichever comes first between time set in P06.14 and time needed for motor to drop below velocity set in P04.39. Although BRK-OFF signal is valid, actual activation of holding brake is dependent on whether the motor comes with holding brake).*

*4. BRK-ON signal doesn't indicate the activation of holding brake but the validation of the signal. Holding brake is not applied when BRK-ON signal is valid. Same idea goes for BRK-OFF signal.*

## Stopping when alarm occurs – Sequence Diagram

Servo braking method. Status after stopping: Free running

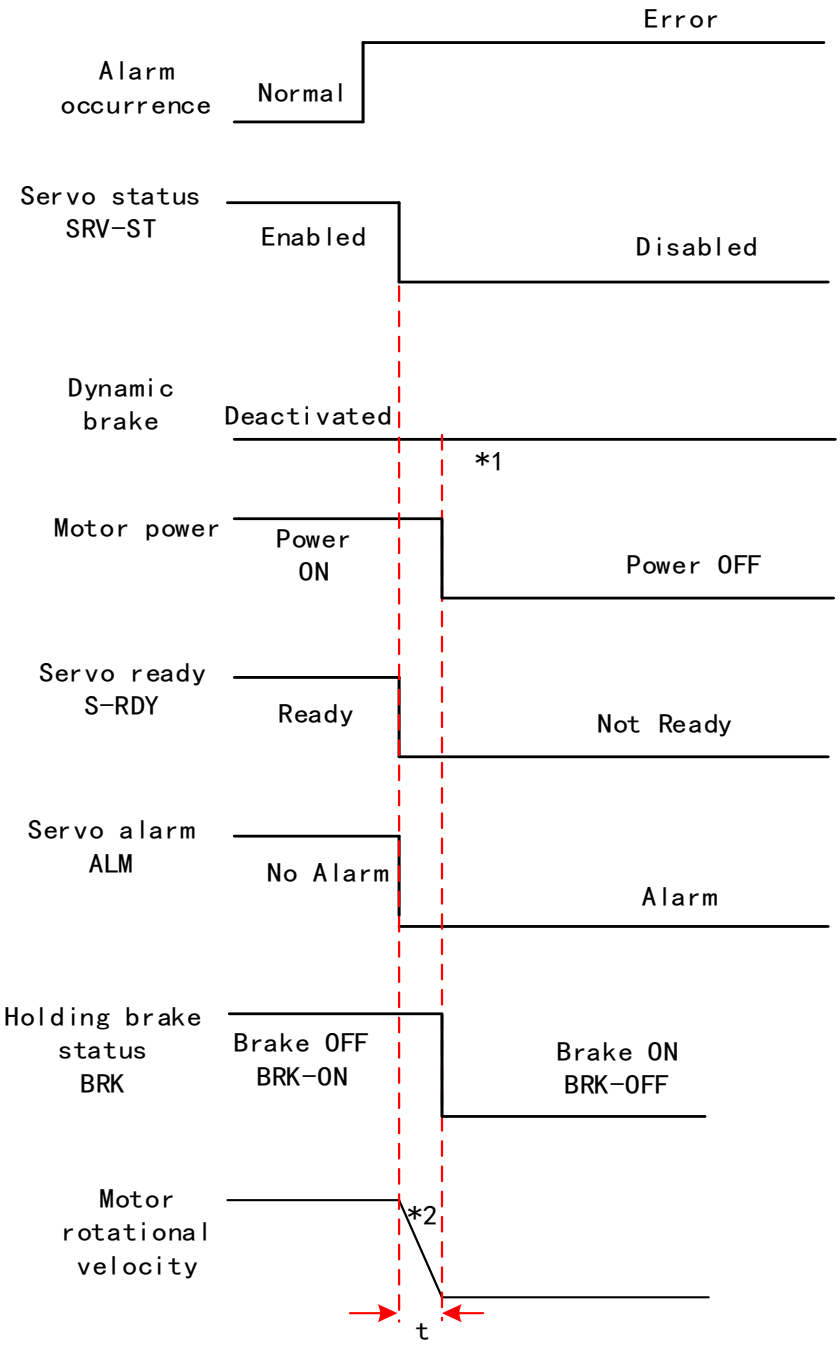

Free stopping method. Status after stopping: Free moving

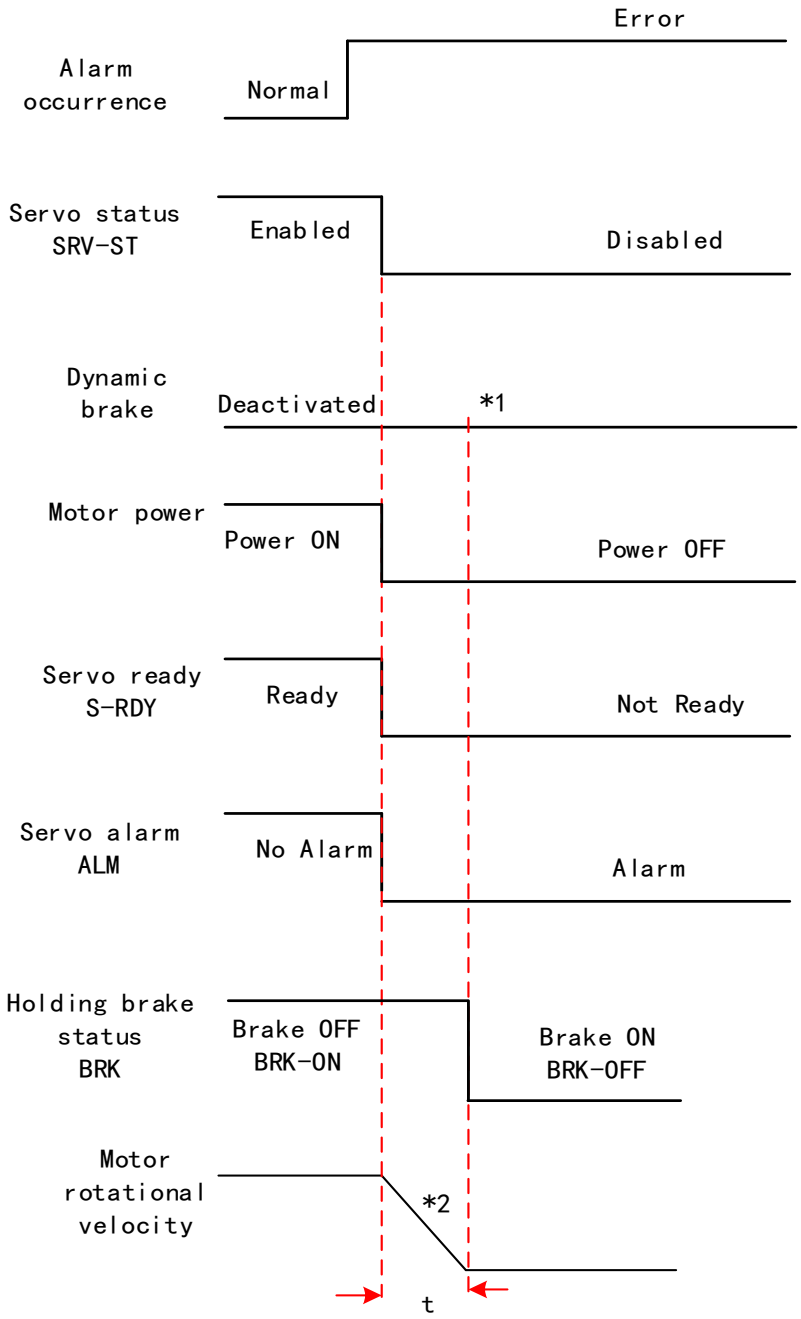

** *1. Status after stopping is as defined in P05.10.*

*2. Servo stopping method is as defined in P05.10. Deceleration time t is determined by whichever comes first between time set in P06.14 and time needed for motor to drop below velocity set in P04.39. Although BRK-OFF signal is valid, actual activation of holding brake is dependent on whether the motor comes with holding brake).*

*3. BRK-ON signal doesn't indicate the activation of holding brake but the invalidation of the signal. Holding brake is not applied when BRK-ON signal is valid. Same idea goes for BRK-OFF signal.*

## Alarm clearing - Sequence diagram

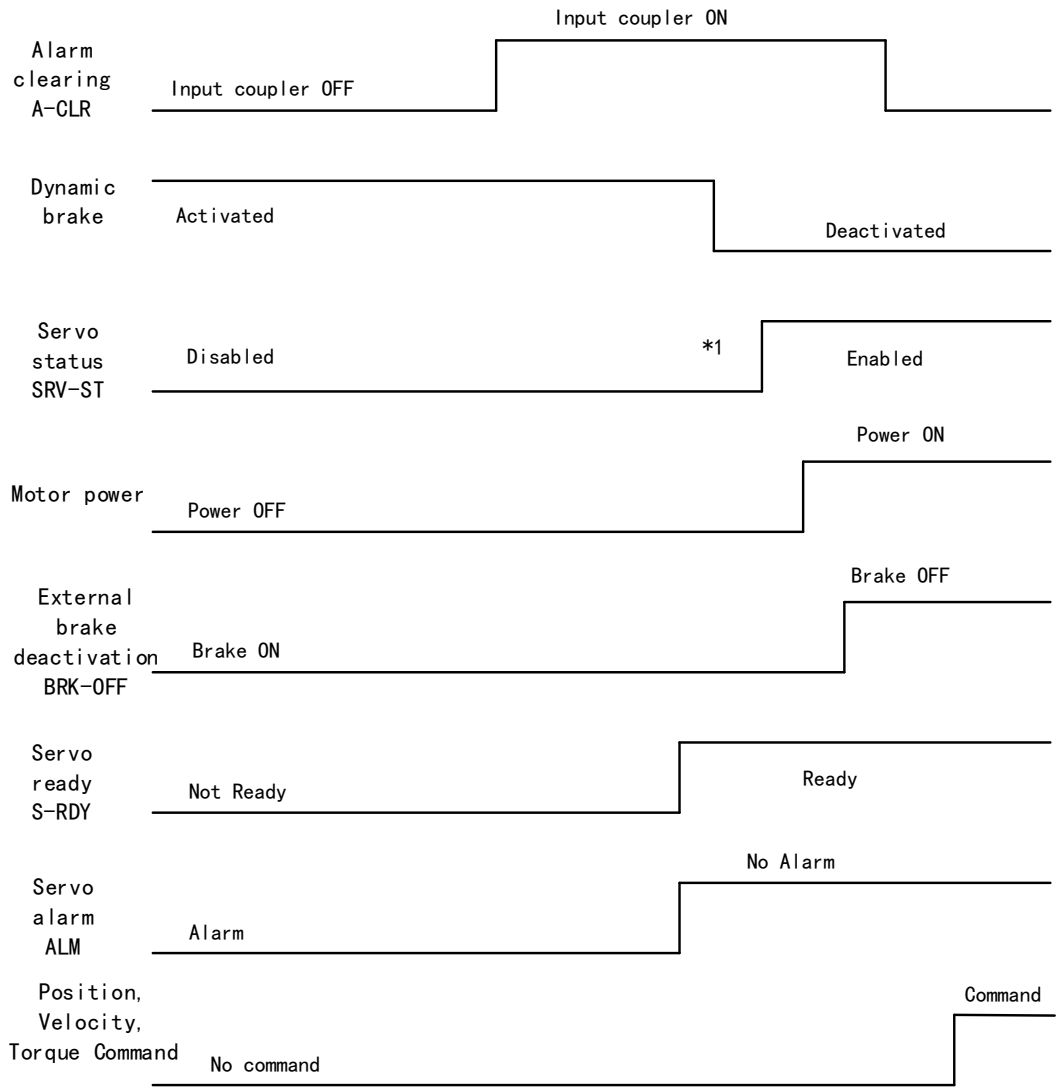


*** 1.SRV-ST signal is received when servo driver is enabled. Command input is not allowed yet*

*2. BRK-OFF signal doesn't indicate the deactivation of holding brake but the invalidation of the signal. Holding brake is applied when BRK-OFF signal is invalid.*

## 4.2 Electronic gear ratio

When loaded axis moved for 1 command unit, it corresponds to motor encoder unit which is converted in more comprehensible physical units such as μm. The use of electronic gear ratio is to turn the movement in physical units to required pulse count equivalency.

$$\text{Electronic gear ratio} = \frac{\text{Rotor movement (Encoder unit)}}{\text{Loaded axis movement(Command unit)}}$$

Rotor might be connected to load through reducer or other mechanical structures. Hence, the gear ratio is closely related to reducer gear ratio, position encoder resolution and mechanical dimensions related parameters.

$$\text{Electronic gear ratio} = \frac{\text{Encoder resolution}}{\text{Loaded axis resolution}}$$

Electronic gear can be set through P00.08. If P00.08 ≠ 0, P00.08 is valid. If P00.08 = 0, object dictionary 6092-01 is valid.

Command pulse count per motor revolution needs to be ≥ Encoder Pulse Count per Revolution / 8000.

ELD3-EC series comes with motors with 23-bit encoder. Pulse count per revolution for 23-bit encoder = 8388608. From the condition above, the command pulse count per motor revolution for 23-bit encoder ≥ 1049.

| P00.08 | **Label** | Command pulse count per revolution | **Mode** | **F** | | |
|---|---|---|---|---|---|---|
| | **Range** | 0~8388608 | **Default** | 0 | **Unit** | P- |
| | **Activation** | After restart | | | **Index** | 2008h |
| | Pulses per revolution can be set using object dictionary 608F, 6091, 6092. However, P00.08 has higher priority. | | | | | |

| Index 608Fh-01 | **Label** | Encoder Increments | | | **Mode** | **PT** | | |
|---|---|---|---|---|---|---|---|---|
| | **Range** | 0~2147483647 | | | **Default** | 0 | **Unit** | *encoder* |
| | **Structure** | VAR | **Type** | UINT32 | **Mapping** | TPDO | **Access** | RO |
| | To set encoder resolution | | | | | | | |

| Index 6091h-01 | **Label** | Motor Revolutions | | | **Mode** | **F** | | |
|---|---|---|---|---|---|---|---|---|
| | **Range** | 1~2147483647 | | | **Default** | 1 | **Unit** | r |
| | **Structure** | VAR | **Type** | UINT32 | **Mapping** | RPDO | **Access** | RW |
| | To set electronic gear ratio numerator | | | | | | | |

| Index 6091h-02 | Label | Shaft Revolutions | | | Mode | F | | |
|---|---|---|---|---|---|---|---|---|
| | Range | 1~2147483647 | | | Default | 1 | Unit | r |
| | Structure | VAR | Type | UINT32 | Mapping | RPDO | Access | RW |
| | To set electronic gear ratio denominator | | | | | | | |

| Index 6092h-01 | Label | Feed | | | Mode | F | | |
|---|---|---|---|---|---|---|---|---|
| | Range | 1~2147483647 | | | Default | 10000 | Unit | *Command*/r |
| | Structure | VAR | Type | UINT32 | Mapping | RPDO | Access | RW |
| | If 6092h-01(Feed constant) is not equal to 608Fh(Position encoder resolution), then:<br>Electronic gear ratio = Encoder increments / 6092h-01<br><br>If 6092h-01(Feed constant) is equal to 608Fh(Position encoder resolution), then:<br>Electronic gear ratio = 6091-01 / 6092h-01 | | | | | | | |

# Chapter 5 Control Mode

## 5.1 ELD3-EC motion control step-by-step

A. EtherCAT master device sends "control word (6040h)" to initialize the drive.
B. Driver sends feedback "status word (6041h)" to the master device to indicate ready status (status word indication).
C. Master device sends enable command (control word switch).
D. The driver enables and sends feedback status to the master device.
E. The master station sends homing command to home the axis. (Homing parameter and control word switch)
F. Driver returns to home and sends feedback homed status to master device (status word indication)
G. The master station sends the position mode command for position movement (position motion parameters and control word switch) or sends the velocity command for velocity movement (velocity motion parameters and control word switch).
H. When the drive is finished executing the command (position command), ELD3-EC feedbacks the position/velocity to the master device for monitoring during the motion.
I. The master device sends commands for the next motion.

# 5.2 CIA402 State Machine

## State machine switchover diagram

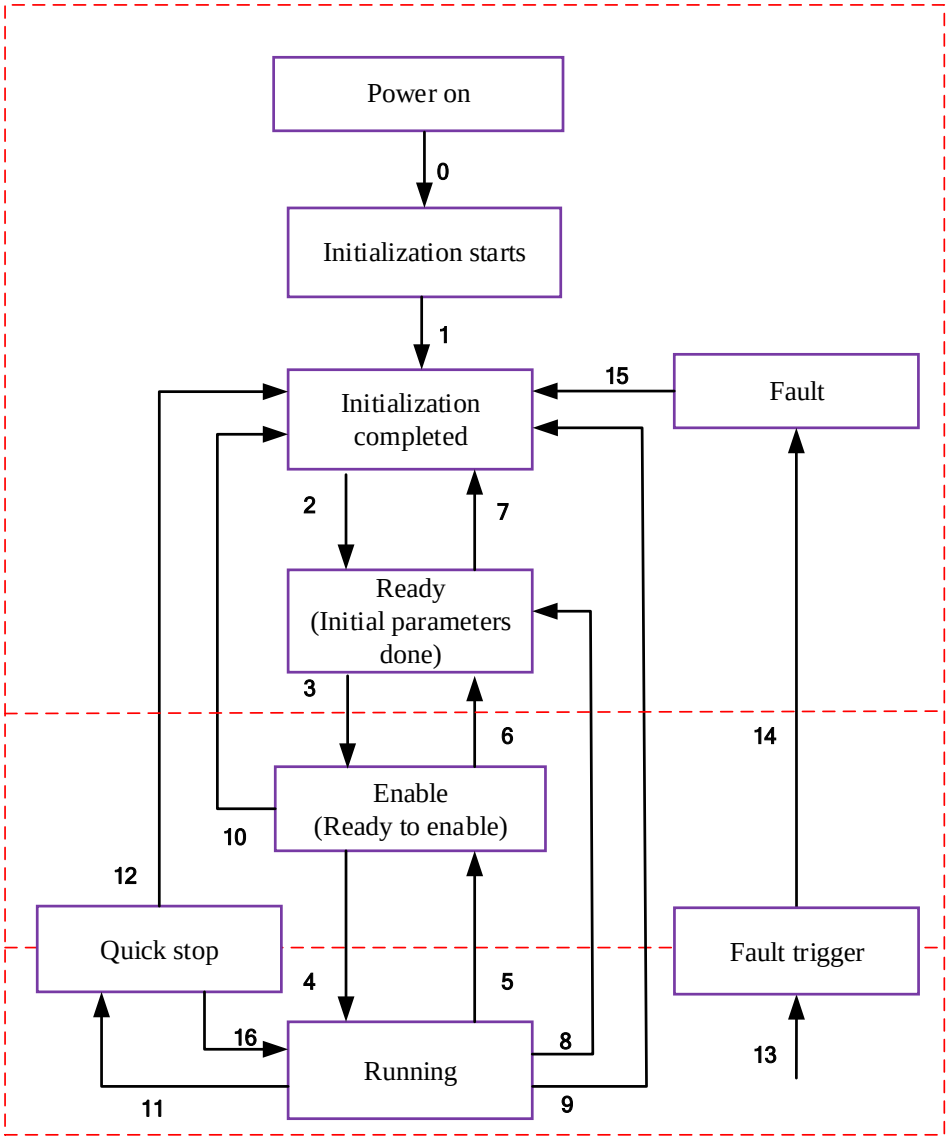


| Control Circuit | Main Power | Enable Disable |
|---|---|---|
| ON | OFF | Disable |
| ON | ON | Disable |
| ON | ON | Enable |

**Figure 5.1 ELD3-EC 402 State Machine switchover diagram**

**Table 5.1 Status description**

| Status | Description |
|---|---|
| Initialization starts | Driver powered on, initialization starts; Holding brake activated; Axis disabled |
| Initialization done | Initialization done; Parameters initialize, faultless; Axis disabled. |
| Ready | Parameter initialization done; Axis disabled. |
| Enable | Servo driver is ready to be enabled. |
| Running | Driver enabled, faultless |
| Quick stop | Quick stop activated |
| Fault triggered | Alarm not solved yet; Axis disabled. |
| Fault | Alarm solved. Waiting to switch from 402 state machine to Initialization starts; Axis disabled. |

402 state machine switching is dependent on master device controlled servo driver control word (6040h)

| CiA402 status switching | | Control word 6040h | Status word 6041h Bit1-Bit9 |
|---|---|---|---|
| 0 | Power on → Initialization | Transit automatically | 0x0000 |
| 1 | Initialization → Faultless | Transit automatically, Enter 13 if fault occurs | 0x0250 |
| 2 | Faultless-- ▶Ready | 0x0006 | 0x0231 |
| 3 | Servo ready-→ Waiting to enable | 0x0007 | 0x0233 |
| 4 | Waiting to enable-- ▶Running | 0x000F | 0x0237 |
| 5 | Running → Waiting to enable | 0x0007 | 0x0233 |
| 6 | Waiting to enable → Ready | 0x0006 | 0x0231 |
| 7 | Ready → Faultless | 0x0000 | 0x0250 |
| 8 | Running → Ready | 0x0006 | 0x0231 |
| 9 | Running-- ▶Faultless | 0x0000 | 0x0250 |
| 10 | Waiting to enable → Faultless | 0x0000 | 0x0250 |
| 11 | Running-- ▶Quick stop | 0x0002 | 0x0217 |
| 12 | Quick stop → Faultless | Transit automatically | 0x0250 |
| 13 | Fault stop | Transit automatically | 0x021F |
| 14 | Fault stop-- ▶Fault | Transit automatically | 0x0218 |
| 15 | Fault → Faultless | 0x80 | 0x0250 |
| 16 | Quick stop-- ▶Running | 0x0F | 0x0237 |

# 5.3 Driver Control Mode Setting

## 5.3.1 Supported control mode (6502h)

ELD3-EC supports seven modes, as defined in 6502h.

| Bit | 31~10 | 9 | 8 | 7 | 6 | 5 | 4 | 3 | 2 | 1 | 0 |
|---|---|---|---|---|---|---|---|---|---|---|---|
| Mode | Reserved | CST | CSV | CSP | Reserved | HM | Reserved | PT | PV | Reserved | PP |
| 1:Supported | 0 | 1 | 1 | 1 | 0 | 1 | 0 | 1 | 1 | 0 | 1 |

| Description | Abbr. |
|---|---|
| Profile position mode | PP |
| Profile velocity mode | PV |
| Profile Torque mode | PT |
| Homing mode | HM |
| Cyclic synchronous position mode | CSP |
| Cyclic synchronous velocity mode | CSV |
| Cyclic synchronous torque mode | CST |

## 5.3.2 Operational mode setting (6060h) and Operational mode display (6061h)

The operation mode of the servo drive is set in 6060h. The operation mode of the servo drive is viewed in 6061h.

| Bit | Description | Abbr. |
|---|---|---|
| 1 | Profile position mode | PP |
| 3 | Profile velocity mode | PV |
| 4 | Profile Torque mode | PT |
| 6 | Homing mode | HM |
| 8 | Cyclic synchronous position mode | CSP |
| 9 | Cyclic synchronous velocity mode | CSV |
| 10 | Cyclic synchronous torque mode | CST |

# 5.4 Common Functions for All Modes

## 5.4.1 Digital input setting and status display

Please refer to chapter 5 for more details on digital I/O input and polarity settings.60FDh object complies with IEC61800-200 standard input I/O status mapping object. 60FDh is set according to function as the table below shows.

| **Bit31** | **Bit30** | **Bit29** | **Bit28** | **Bit27** | **Bit26** | **Bit25** | **Bit24** |
|---|---|---|---|---|---|---|---|
| Z signal | Reserved | Reserved | Reserved | Touch Probe 2 | Touch Probe 1 | BRAKE | INP/V-COIN /TLC |
| **Bit23** | **Bit22** | **Bit21** | **Bit20** | **Bit19** | **Bit18** | **Bit17** | **Bit16** |
| E-STOP | Reserved | Reserved | Reserved | Reserved | Reserved | DI14 | DI13 |
| **Bit15** | **Bit14** | **Bit13** | **Bit12** | **Bit11** | **Bit10** | **Bit9** | **Bit8** |
| DI12 | DI11 | DI10 | DI9 | DI8 | DI7 | DI6 | DI5 |
| **Bit7** | **Bit6** | **Bit5** | **Bit4** | **Bit3** | **Bit2** | **Bit1** | **Bit0** |
| DI4 | DI3 | DI2 | DI1 | Reserved | HOME | POT | NOT |

## 5.4.2 Digital output setting and control operation method

In addition to the internal operation of the servo system, ELD3-EC also provides a function for the master device to operate digital I/O output of the servo driver.
If I/O output function is set up as master device control, master device can control servo driver digital I/O output through 60FEh object

| Bit / Sub-index | 31~21 | 21 | 20 | 19 | 18 | 17 | 16 | 15~0 |
|---|---|---|---|---|---|---|---|---|
| 01h | Reserved | DO6 valid | DO5 valid | DO4 valid | DO3 valid | DO2 valid | DO1 valid | Reserved |
| 02h | | DO6 enabled | DO5 enabled | DO4 enabled | DO3 enabled | DO2 enabled | DO1 enabled | |

## 5.4.3 Motor Rotational Direction

Rotational direction is defined in 607Eh.

| Mode | | Set value |
|---|---|---|
| Position Mode | PP<br>HM<br>CSP | 0：Rotate in the same direction as the position command<br>128：Rotate in the opposite direction to the position command |
| Velocity Mode | PV<br>CSV | 0：Rotate in the same direction as the position command<br>64：Rotate in the opposite direction to the position command |
| Torque Mode | PT<br>CST | 0：Rotate in the same direction as the position command<br>32：Rotate in the opposite direction to the position command |
| ALL Modes | | 0：Rotate in the same direction as the position command<br>224：Rotate in the opposite direction to the position command |

## 5.4.4 Stop Settings

ELD3-EC provides quick stop function. Stopping is different under different modes. Controlled by using object dictionary 605A.

| Index 605Ah | Label | Quick stop option code | | | Mode | F | | |
|---|---|---|---|---|---|---|---|---|
| | Range | 0~7 | | | Default | 2 | Unit | - |
| | Structure | VAR | Type | INT16 | Mapping | - | Access | RW |

Motor stops when quick stop option code is given.

**PP, CSP, CSV, PV**

0 ： To stop motor through P05.06. Status: Switch on disable, axis disabled.

1 ： Motor decelerates and stops through 6084. Status: Switch on disable, axis disabled.

2 ： Motor decelerates and stops through 6085. Status: Switch on disable, axis disabled.

3 ： Motor decelerates and stops through 60C6. Status: Switch on disable, axis disabled.

5 ： Motor decelerates and stops through 6084. Status: Quick stop

6 ： Motor decelerates and stops through 6085. Status: Quick stop

7 ： Motor decelerates and stops through 60C6. Status: Quick stop

**HM**

0 ： To stop motor through P05.06. Status: Switch on disable, axis disabled.

1 ： Motor decelerates and stops through 609A. Status: Switch on disable, axis disabled.

2 ： Motor decelerates and stops through 6085. Status: Switch on disable, axis disabled.

3 ： Motor decelerates and stops through 60C6. Status: Switch on disable, axis disabled.

5 ： Motor decelerates and stops through 609A. Status: Quick stop

6 ： Motor decelerates and stops through 6085. Status: Quick stop

7 ： Motor decelerates and stops through 60C6. Status: Quick stop

When 402 state machine is disabled, the motor will stop freely.
When bit8(Halt) of 6040h is 1, the motor will stop with deceleration set in 6083h/6084h.

## 5.4.5 Position mode – Electronic Gear

ELD3-EC position mode consists of cyclic synchronous position mode (CSP), protocol position mode (PP) and homing mode (HM), only in these three modes is the electronic gear valid.
Electronic gear ratio range is 0.001~8000(23-bit encoder), otherwise ErA00 might occur if over range (the warning is not saved, after modification to a reasonable range, alarm on operational panel will automatically disappear, but the 402 state will still be in the "error" state, write 0x80 into 6040h).

*Method 1:*
Electronic gear ratio setting is defined by 608Fh (Position encoder resolution). 6091h (Gear ratio), 6092h (Feed constant) to change the motor position. Only valid under pre-operational mode.

608Fh (Position encoder resolution) is the resolution of the encoder, which is read internally without additional setting. 6092h_01 represents the number of pulses that can be set for each revolution of the motor. 6091h_01/6091h_02 is real-time update effective.

Electronic gear subdivision method can be determined by modifying 6092h_01 (Feed constant)

1. If 6092h_01 (Feed constant) is not equal to 608Fh (Position Encoder resolution), then:

Electronic gear ratio = encoder resolution / 6092h_01

2. If 6092h_01(Feed constant) is equal to 608Fh(Position encoder resolution), then:

Electronic gear ratio = 6091_01/6092h_01

Electronic gear ratio range is 0.001~8000(23 bit encoder), 0.001~125(17 bit encoder)

Command pulse count per motor revolution needs to be ≥ Encoder Pulse Count per Revolution / 8000.

ELD3 series comes with motors with 17-bit and 23-bit encoder. Pulse count per revolution for 17-bit encoder = 131072; for 23-bit encoder = 8388608. From the condition above, the command pulse count per motor revolution for 17-bit encoder should be ≥ 17; for 23-bit encoder ≥ 1049.

*Method 2:*

Electronic gear can be set through P00.08. If P00.08 ≠ 0, P00.08 is valid. If P00.08 = 0, object dictionary 6092-01 is valid.

***Note:*** *when the setting value exceeds this range, the error will be reported and automatically reset to the default value. The default values of 6091_01, 6091_02 and 6092_01 are 1, 1 and 10000.*

## 5.4.6 Position Limits

The hardware limit is valid in all operational modes, and the software limit is valid only in the absolute operational mode of cyclic synchronous position mode (CSP) and profile position mode (PP)

The limit of the software is defined by 607Dh. The maximum position in the negative direction is defined in 607d-01h and the maximum position in the positive direction is defined in 607d-02h, the unit is consistent with the command unit.

The setting of object dictionary 0x5012-04 not only affects the homing offset of 607C, but also affects the software limit, 607D needs to be modified before the operational state

| 5012-04 | | Actual Positive Position Limit | Actual Negative Position Limit |
|---|---|---|---|
| Bit2 | Bit3 | | |
| 0 | 0 | 607D-02 + 607C | 607D-01 + 607C |

| | | | |
|---|---|---|---|
| 0 | 1 | 607D-02 - 607C | 607D-01 - 607C |
| 1 | X | 607D-02 | 607D-01 |

ELD3-EC Software position limits valid conditions:

1. It can only be set in the pre-operational state of ESM. It is recommended to configure it by SDO when the system starts.
2. Only in the absolute mode of CSP and PP, in CSP mode, it is recommended to use the software limit function of the master station to achieve the fastest limit performance.
3. The incremental encoder motor is not effective until the homing process completed.
4. The setting rule is 607d-01h < 607d-02h, that is, the negative position limit value is less than the positive position limit value.

## 5.4.7 Control Word

Bit definition of Control Word 6040h.

| Bit | 15~11 | 10~9 | 8 | 7 | 6~4 | 3 | 2 | 1 | 0 |
|---|---|---|---|---|---|---|---|---|---|
| Definition | - | - | Halt | Fault reset | Related to modes | Operation enable | Quick stop | Voltage output | Switch on |

| Command | Bit7 and Bit0 to Bit3 | | | | | 6040 Value | 402 State machine *1) |
|---|---|---|---|---|---|---|---|
| | 7：Fault reset | 3：Operation enable | 2：Quick stop | 1：Voltage output | 0：Start | | |
| Power off | 0 | × | 1 | 1 | 0 | 0006h | 2;6;8 |
| Switch on | 0 | 0 | 1 | 1 | 1 | 0007h | 3* |
| Switch on | 0 | 1 | 1 | 1 | 1 | 000Fh | 3** |
| No voltage output | 0 | × | × | 0 | × | 0000h | 7;9;10;12 |
| Quick stop | 0 | × | 0 | 1 | × | 0002h | 7;10;11 |
| Operation enable | 0 | 0 | 1 | 1 | 1 | 0007h | 5 |
| enable | 0 | 1 | 1 | 1 | 1 | 000Fh | 4;16 |
| Fault reset | Rising edge | × | × | × | × | 0080h | 15 |

× is not affected by this bit state

* indicates that this transition is performed in the device start state

** indicates that it has no effect on the start state and remains in the start state

*1) The state machine switch corresponds to figure 7.1

Definition of bit 8 and bit 6~4 in different operation modes are shown in the following table

| Bit | Operation Mode |
|---|---|

| | Profile Position (PP) | Profile Velocity (PV) | Profile Torque (PT) | Homing (HM) | Cyclic Sync Positio n (CSP) | Cyclic Sync Velocity (CSV) | Cyclic Sync Torque (CST) |
|---|---|---|---|---|---|---|---|
| 8 | Stop with deceleration | Stop with deceleratio n | Stop with deceleratio n | Stop with deceleratio n | - | - | - |
| 6 | Absolute/ Increment | - | - | - | - | - | - |
| 5 | Immediately trigger | - | - | - | - | - | - |
| 4 | New Position | - | - | Start | - | - | - |

## 5.4.8 Status Word

Bit definition of Status Word 6041h.

| Bit | Definition |
|---|---|
| 15~14 | Reserved |
| 13~12 | Related to modes |
| 11 | Position limit valid |
| 10 | Position arrival |
| 9 | Distance |
| 8 | Related to modes |
| 7 | Reserved |
| 6 | Not switch on |
| 5 | Quick stop |
| 4 | Voltage output |
| 3 | Fault |
| 2 | Operation enable |
| 1 | Switch on |
| 0 | Ready to switch on |

Bit 11 is valid when the software or hardware limit is in effect.

The combination of bit 6 and bit 3~0 represents the device state shown in following table

| Combination of bit 6 and bit 3~0 | Description |
|---|---|
| **××××,××××,×0××,0000** | Not ready to switch on |
| **××××,××××,×1××,0000** | Switch on disabled |
| **××××,××××,×01×,0001** | Ready to switch on |
| **××××,××××,×01×,0011** | Switch on |
| **××××,××××,×01×,0111** | Operation enabled |
| **××××,××××,×00×,0111** | Quick stop active |
| **××××,××××,×0××,1111** | Fault reaction active |
| **××××,××××,×0××,1000** | Fault |

× is not affected by this bit state

Definition of bit 8 and bit 13~12 in different operation modes are shown in the following table

| Bit | Operation Mode | | | | | | |
|---|---|---|---|---|---|---|---|
| | **Profile Position (PP)** | **Profile Velocity (PV)** | **Profile Torque (PT)** | **Homing (HM)** | **Cyclic Sync Position (CSP)** | **Cyclic Sync Velocity (CSV)** | **Cyclic Sync Torque (CST)** |
| 13 | Position error is too large | - | - | Homing Process error | - | - | - |
| 12 | - | Velocity is 0 | - | Homing Process completed | Following valid | Following valid | Following valid |
| 8 | Abnormal stop | - | - | Abnormal stop | Abnormal stop | - | - |

## 5.4.9 Synchronous cycle time setting

The default synchronous cycle time range of ELD3-EC series is 250us – 10ms. Min value: 125us; Max value: 20ms. Please make sure the values set is the multiplier of 250us.

## 5.4.10 Driver Enabling

This section describes how to use control words 6040h/ status word 6041h command switching/status determination forELD3-EC controlled motor.

**Steps：**

1：Write 0 to the control word 6040h, and then AND 0x250 by bit, whether it is equal to 0x250

2：Write 6 to the control word 6040h, and then AND 0x231 by bit, whether it is equal to 0x231

3：Write 7 to the control word 6040h, and then AND 0x233 by bit, whether it is equal to 0x233

4：Write 15 to the control word 6040h, and then AND 0x237 by bit, whether it is equal to 0x237

# 5.5 Position Mode（CSP、PP、HM）

## 5.5.1 Common Functions of Position Mode

| Index | Sub-Index | Label | Access | PDO | Mode | | |
|---|---|---|---|---|---|---|---|
| | | | | | PP | CSP | HM |
| 6040 | 0 | Control word | RW | RxPDO | Yes | Yes | Yes |
| 6072 | 0 | Max torque | RW | RxPDO | Yes | Yes | Yes |
| 607A | 0 | Target position | RW | RxPDO | Yes | Yes | / |
| 607D | 1 | Min. software limit | RW | RxPDO | Yes | Yes | / |
| | 2 | Max. software limit | RW | RxPDO | Yes | Yes | / |
| 607F | 0 | Maximum protocol velocity | RW | RxPDO | Yes | / | Yes |
| 6080 | 0 | Maximum motor velocity | RW | RxPDO | Yes | Yes | Yes |
| 6081 | 0 | Profile velocity | RW | RxPDO | Yes | / | / |
| 6083 | 0 | Profile acceleration | RW | RxPDO | Yes | / | / |
| 6084 | 0 | Profile deceleration | RW | RxPDO | Yes | / | / |
| 60C5 | 0 | Protocol maximum acceleration | RW | RxPDO | Yes | / | Yes |
| 60C6 | 0 | Protocol maximum deceleration | RW | RxPDO | Yes | / | Yes |

| Index | Sub-Index | Label | Access | PDO | Mode | | |
|---|---|---|---|---|---|---|---|
| | | | | | PP | CSP | HM |
| 6041 | 0 | Status word | RO | TxPDO | Yes | Yes | Yes |
| 6062 | 0 | Position command | RO | TxPDO | Yes | Yes | Yes |
| 6063 | 0 | Actual internal position | RO | TxPDO | Yes | Yes | Yes |
| 6064 | 0 | Actual position feedback | RO | TxPDO | Yes | Yes | Yes |
| 6065 | 0 | Position deviation window | RW | RxPDO | Yes | Yes | / |
| 6066 | 0 | Position deviation detection time | RW | RxPDO | Yes | Yes | / |
| 606C | 0 | Velocity feedback | RO | TxPDO | Yes | Yes | Yes |

| | | | | | | | |
|---|---|---|---|---|---|---|---|
| 6074 | 0 | Internal command torque | RO | TxPDO | Yes | Yes | Yes |
| 6076 | 0 | Rated torque | RO | TxPDO | Yes | Yes | Yes |
| 6077 | 0 | Actual torque | RO | TxPDO | Yes | Yes | Yes |
| 60F4 | 0 | Actual following error | RO | TxPDO | Yes | Yes | Yes |
| 60FA | 0 | Position loop velocity output | RO | TxPDO | Yes | Yes | Yes |
| 60FC | 0 | Internal command position | RO | TxPDO | Yes | Yes | Yes |

## 5.5.2 Cyclic Synchronous Position Mode (CSP)

### CSP Block Diagram

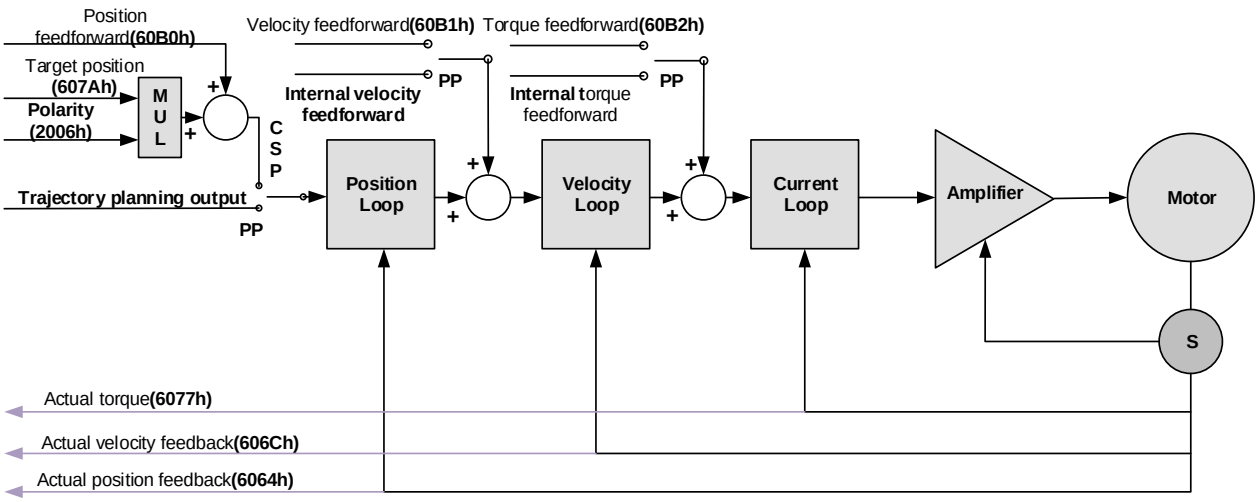


**Related Objects**

Basic object

| PDO | Index+Sub-Index | Label | Data Type | Access | Unit | Notes |
|---|---|---|---|---|---|---|
| (RXPDO) | 6040-00h | Control word | U16 | RW | — | Required |
| | 607A-00h | Target position | I32 | RW | Uint | Required |
| | 60B0-00h | Position feedforward | I32 | RW | Uint | Optional |
| | 60B1-00h | Velocity feedforward | I32 | RW | Uint /S | Optional |
| | 60B2-00h | Torque feedforward | I16 | RW | 0.1% | Optional |
| (TXPDO) | 6041-00h | Status word | U16 | RO | — | Required |
| | 6064-00h | Actual feedback position | I32 | RO | Uint | Required |
| | 606C-00h | Actual feedback velocity | I32 | RO | Uint /S | Optional |
| | 60F4-00h | Actual following error | I32 | RO | Uint | Optional |
| | 6077-00h | Actual torque | I16 | RO | 0.1% | Optional |

Extended object

| Index+Sub-Index | Label | Data Type | Access | Unit |
|---|---|---|---|---|
| 603F-00h | Error code | U16 | RO | — |
| 6060-00h | Operation mode | I8 | RW | — |
| 6061-00h | Displayed operation mode | I8 | RO | — |
| 6062-00h | Position demand value | I32 | RO | Uint |
| 606B-00h | Internal command speed | I32 | RO | Uint |
| 607D-01h | Min. software limit | I32 | RO | Uint |
| 607D-02h | Max. software limit | I32 | RO | Uint |
| 605A-00h | Quick stop option code | I16 | RW | — |
| 6085-00h | Emergency stop deceleration | U32 | RW | Uint /S |
| 608F-01h | Encoder resolution | U32 | RO | P |
| 608F-02h | Motor turns | U32 | RO | — |
| 6091-01h | Electronic gear ratio numerator | U32 | RW | — |
| 6091-02h | Electronic gear ratio denominator | U32 | RW | — |
| 6092-01h | Number of pulses per rotation | U32 | RW | — |
| 6092-02h | Number of physical axis turns | U32 | RO | — |

## 5.5.3 Protocol Position Mode (PP)

Under non-synchronous mode, master device is responsible for only sending parameters and control command; After receiving enable command from master device, servo driver will plan motion route according to parameters. Under non-synchronous mode, motor motion between each axes are asynchronous.

From the perspective of servo driver functions, the difference between PP and CSP mode is that PP mode requires track generator function from L7EC

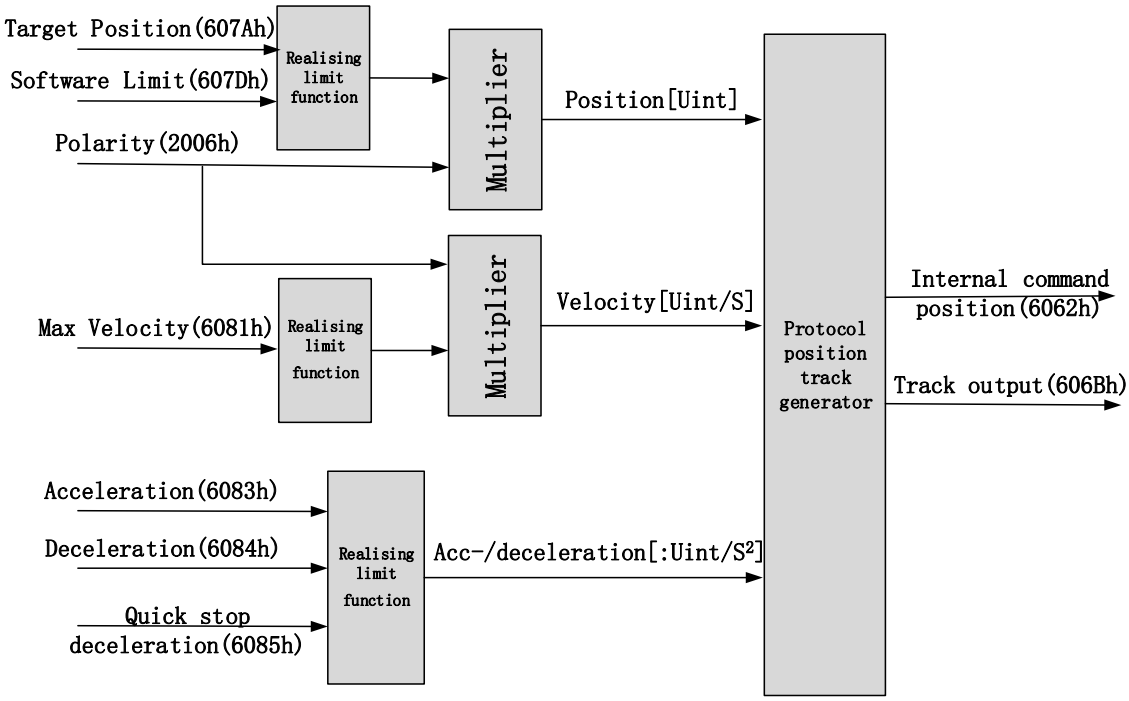


## Related Parameters

Basic object

| PDO | Index+Sub-Index | Label | Data Type | Access | Unit | Notes |
|---|---|---|---|---|---|---|
| (RXPDO) | 6040-00h | Control word | U16 | RW | — | Required |
| | 607A-00h | Target position | I32 | RW | Uint | Required |
| | 6081-00h | Max. velocity | U32 | RW | Uint | Required |
| | 6083-00h | Acceleration | I32 | RW | Uint /S | Optional |
| (TXPDO) | 6041-00h | Status word | U16 | RO | — | Required |
| | 603F-00h | Error code | U16 | RO | | Optional |
| | 6064-00h | Actual position feedback | I32 | RO | Uint | Required |
| | 606C-00h | Actual velocity feedback | I32 | RO | Uint /S | Optional |
| | 60F4-00h | Actual following error | I32 | RO | Uint | Optional |
| | 6077-00h | Actual torque | I16 | RO | 0.1% | Optional |

Extended object

| Index+Sub-Index | Label | Data Type | Access | Unit |
|---|---|---|---|---|
| 603F-00h | Error code | U16 | RO | — |
| 6060-00h | Operation mode | I8 | RW | — |
| 6061-00h | Displayed operation mode | I8 | RO | — |
| 6062-00h | Position demand value | I32 | RO | Uint |
| 606B-00h | Internal command speed | I32 | RO | Uint |
| 607D-01h | Min. software limit | I32 | RO | Uint |
| 607D-02h | Max. software limit | I32 | RO | Uint |

| | | | | |
|---|---|---|---|---|
| 605A-00h | Quick stop option code | I16 | RW | — |
| 6085-00h | Emergency stop deceleration | U32 | RW | Uint /S |
| 608F-01h | Encoder resolution | U32 | RO | P |
| 608F-02h | Motor turns | U32 | RO | — |
| 6091-01h | Electronic gear ratio numerator | U32 | RW | — |
| 6091-02h | Electronic gear ratio denominator | U32 | RW | — |
| 6092-01h | Number of pulses per rotation | U32 | RW | — |
| 6092-02h | Number of physical axis turns | U32 | RO | — |

## Control and status words under PP mode

Control word bits 4~6 definition under PP mode

| Bit | Value | Definition |
|---|---|---|
| 4 (New position) | 0—>1 | Latest target position(607Ah)、Max. Velocity(6081h)、Acc-/deceleration(6083h/6084h) Starts |
| 5 (Instant trigger) | 0 | Trigger new position command once current one is completed. |
| | 1 | Interrupted current position command and trigger new position command |
| 6(Absolute/ relative) | 0 | Set target position(607Ah)as absolute position |
| | 1 | Set target position(607Ah) as relative position |

5 motion structures under PP mode

| Control words bit 5 | 0 | 1 |
|---|---|---|
| Accelerates/ constant velocity toward target position | 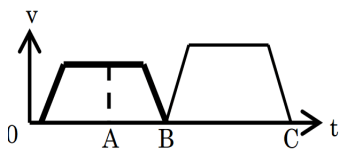 | 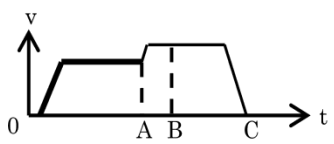 |
| Decelerates towards target position | 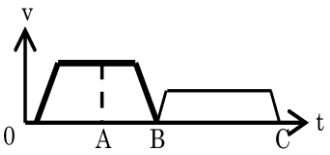 | 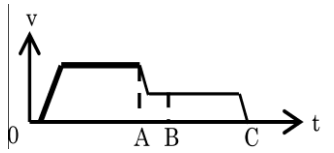 |
| Target position in inversed direction | 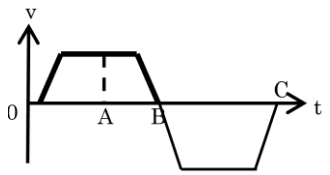 | 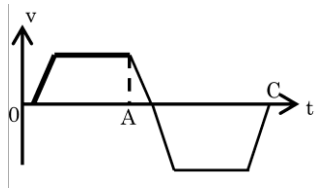 |

A：Command switching time from master device
B：Arrival time before target position renewal
C：Arrival time after target position renewal
Thick line: Motion before command changed
Thin line ：Motion after command changed

Status word bits 12-15, 10, 8 definition under PP mode

| Bit | Value | Definition |
|---|---|---|
| 8(Abnormal Stoppage) | 0 | Normal motion |
| | 1 | Abnormal stoppage triggered, motor stopped *1) |
| 10(Arrived at position) | 0 | Motion not completed |
| | 1 | Target position reached |
| 12(New position) | 0 | Current motion completed/interruptible, able to execute new position command *2) |
| | 1 | Current motion not completed/interruptible, unable to execute new position command |
| 14(Motion Parameter = 0) | 0 | Motion parameters valid, necessary parameters all not set to 0. |
| | 1 | Parameter = 0 under current motion. One of 3 parameters, Max. velocity (6081h), acceleration (6083h) and deceleration (6084h) = 0. |
| 15(Trigger) | 0 | Current motion incomplete/uninterruptable, new target position cannot be renewed. *3) |
| | 1 | Current motion completed/interruptible, new target position can be renewed. |

*1) Bit 8 abnormal stoppage usually valid when hardware limit, deceleration stoppage and quick stop are triggered.
*2) Bit 12 under control word(6040h)bit 5 valid and bit 4 invalid, motion interruptible.
*3) Bit 15 and bit 12 have inversed logic under PP mode.

<u>Application: Realization of relative position motion</u>

Step 1: 6060h = 1, determine if 6061h =1. Servo driver is now under PP mode.
Step 2: Write motion parameters: Target position 607Ah, Max. velocity 6081h, acceleration 6083h, deceleration 6084h
Step 3: Enable servo driver and switch bit 6 and 4 to realize relative position motion.

## 5.5.4 Homing mode (HM)

ELD3-EC servo system supports every other homing method except for method 36. Output/input parameters of L7EC are as shown below.

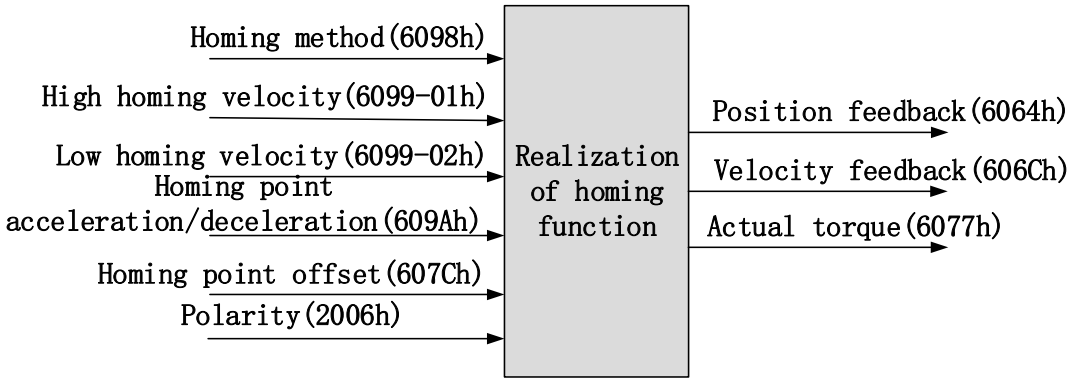


**Related Parameters**

Basic object

| PDO | Index+Sub-Index | Name | Data Type | Access | Unit | Notes |
|---|---|---|---|---|---|---|
| (RXPDO) | 6040-00h | Control word | U16 | RW | — | Required |
| | 6098-00h | Homing mode | I8 | RW | Uint | Optional |
| | 6099-01h | High homing velocity | U32 | RW | Uint/S | Optional |
| | 6099-02h | Low homing velocity | U32 | RW | Uint /S | Optional |
| | 609A-00h | Homing point acceleration | U32 | RW | Uint /$S^2$ | Optional |
| | 607C-00h | Homing point offset | I32 | RW | Uint | Optional |
| (TXPDO) | 60-00h | Status word | U16 | RO | — | Required |
| | 603F-00h | Error code | U16 | RO | | Optional |
| | 6064-00h | Actual position feedback | I32 | RO | Uint | Optional |
| | 606C-00h | Actual velocity feedback | I32 | RO | Uint /S | Optional |
| | 60F4-00h | Actual following error | I32 | RO | Uint | Optional |
| | 6077-00h | Actual torque | I16 | RO | 0.1% | Optional |

Extended object

| Index+Sub-Index | Label | Data Type | Access | Unit |
|---|---|---|---|---|
| 603F-00h | Error code | U16 | RO | — |
| 6060-00h | Operation mode | I8 | RW | — |
| 6061-00h | Displayed operation mode | I8 | RO | — |
| 6062-00h | Position demand value | I32 | RO | Uint |
| 606B-00h | Internal command speed | I32 | RO | Uint |
| 608F-01h | Encoder resolution | I32 | RO | Uint |
| 608F-02h | Motor revolution | I32 | RO | Uint |

| | | | | |
|---|---|---|---|---|
| 6091-01h | Electronic gear ratio numerator | U32 | RW | — |
| 6091-02h | Electronic gear ratio denominator | U32 | RW | — |
| 6092-01h | Number of pulses per rotation | U32 | RW | — |
| 6092-02h | Number of physical axis turns | U32 | RO | — |

## Control and status words under HM mode

Control word bit 4 definition under HM mode

| Bit | Value | Definition |
|---|---|---|
| 4(Homing motion starts/stops) | 0—>1 | Homing motion starts |
| | 1 —>0 | Homing motion stops, motor stops |

Status word bits 12-15, 10, 8 definition under PP mode

| Bit | Value | Definition |
|---|---|---|
| 8(Abnormal Stoppage) | 0 | Normal motion |
| | 1 | Abnormal stoppage triggered, motor stops *1) |
| 10(Arrived at position) | 0 | Motion not completed |
| | 1 | Target position reached |
| 12(Homing done) | 0 | Homing not done |
| | 1 | Homing done, valid after reaching position(bit 10) *2) |
| 14(Motion Parameter = 0) | 0 | Motion parameters valid, necessary parameters all not set to 0. |
| | 1 | Parameter = 0 under current motion. One of 4 parameters, Homing mode (6098h), high homing velocity(6099h-01), low homing velocity (6099h-02) and homing point acc-/deceleration (609Ah) = 0. |
| 15(Trigger) | 0 | Homing triggered/completed *3) |
| | 1 | Homing triggers |

*1) Bit 8 abnormal stoppage usually valid when hardware limit, deceleration stoppage and quick stop are triggered.
*2) Determine if homing is done, determine if bit 10/12 is occupied.
*3) Use to indicate if homing is able to trigger or already triggered.

**Incorrect position triggering conditions**

| Triggering condition | Remarks |
|---|---|
| Absolute encoder homing | Control words 6040h bit 4 from 0 to 1 |
| 2 limit switch signals detected | Positive and negative limit switches detected during homing |

| | |
|---|---|
| Negative limit valid when positive limit in used | Negative limit valid under 2,7-10,23-26 homing modes |
| Positive limit valid when negative limit in used | Positive limit valid under 1,11-14,27-30 homing modes |
| Limit switch valid when not in used | Limit switch valid under 3,4,19,20 homing modes |
| Limit switch/homing signal valid when only z-signal in used | Limit switch and homing sensor valid under 33,34 homing modes |

## Homing mode

### Torque limiting mode

**Mode-6**：Search for homing point in **negative direction** at **low velocity**. Stop after torque reaches the value set in P05.39 and homing done signal delivers after the time value set in P05.37

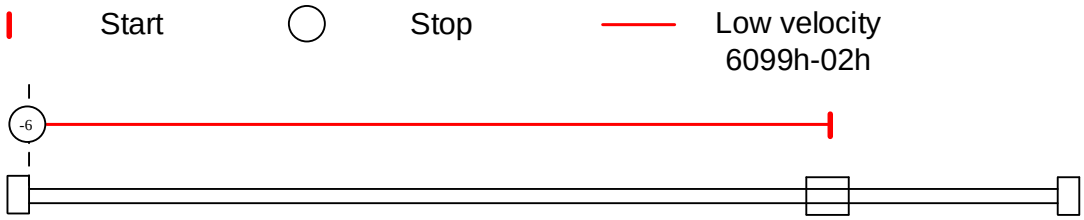


**Mode -5**：Search for homing point in **positive direction** at **low velocity**. Stop after torque reaches the value set in P05.39 and homing done signal delivers after the time value set in P05.37

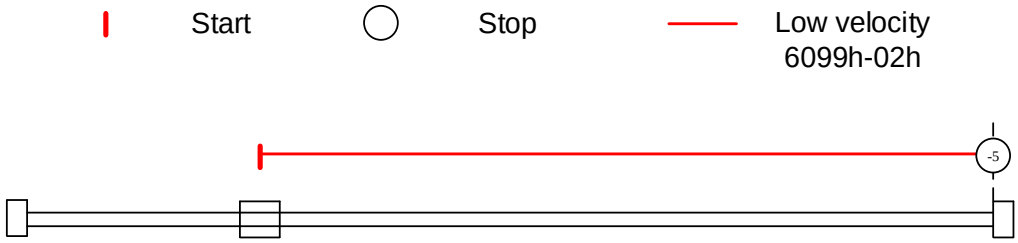


**Mode -4**：Search for homing point in **negative direction** at **high velocity**. Move in **positive direction** after torque reaches the value set in P05.39, stops when torque is gone. Homing done signal delivers after the time value set in P05.37

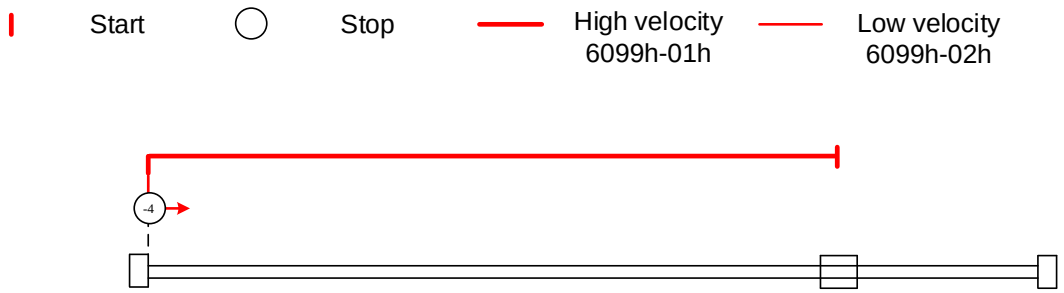


**Mode -3**：Search for homing point in **positive direction** at **high velocity**. Move in **negative direction** after torque reaches the value set in P05.39, stops when torque is gone. Homing done signal delivers after the time value set in P05.37

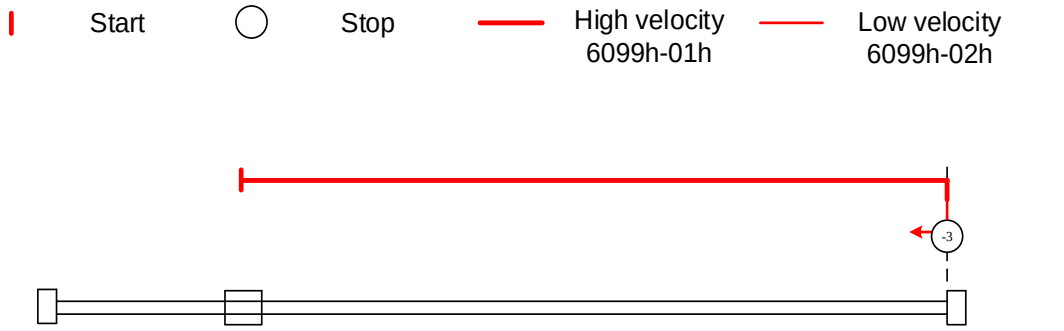


## Torque limiting+Z-signal mode

**Mode -2**：Search for homing point in **negative direction** at **high velocity**. Move in **positive direction** after torque reaches the value set in P05.39, stops when torque is gone with the **first Z-signal**.

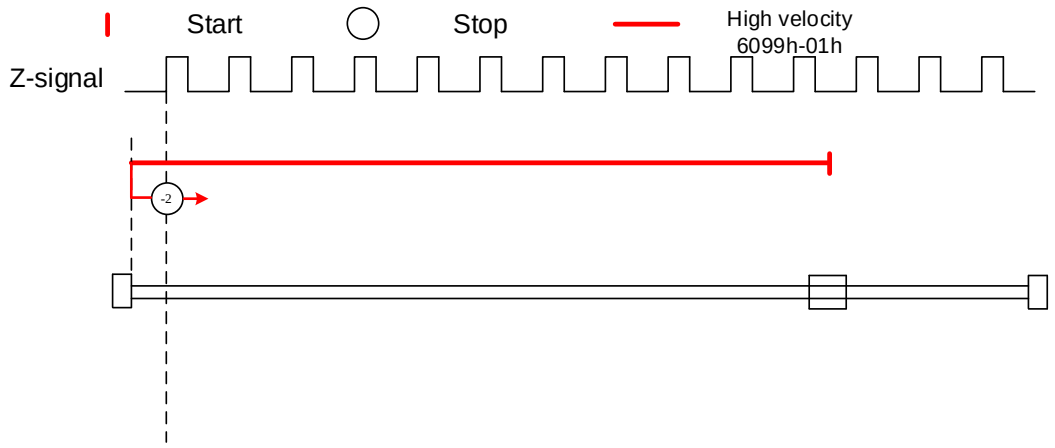


**Mode -1**：Search for homing point in **positive direction** at **high velocity**. Move in **negative direction** after torque reaches the value set in P05.39, stops when torque is gone with the **first Z-signal**.

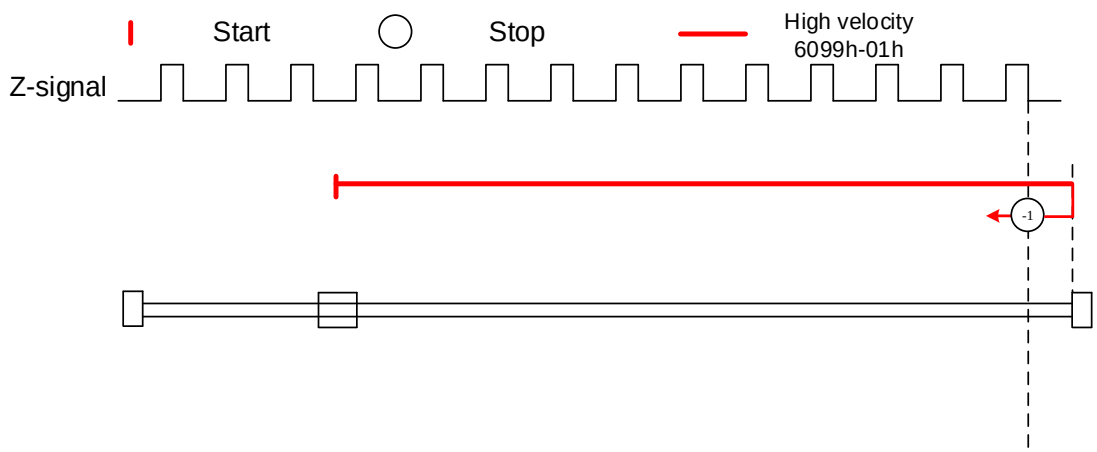


## Limit switch signal+Z-signal mode

**Mode 1:**

Diagram A: *Negative limit switch = OFF*

1. Move in **negative direction** at **high velocity** until **negative limit switch valid.**
2. Move in **positive direction** at **low velocity** and stops **after negative limit switch** and **first encoder Z-signal valid**

Diagram B: *Negative limit switch = ON*

1. Start to move at **negative limit switch position** in **positive direction** at **high velocity** until **negative limit switch invalid.**
2. Move in **negative direction** at **high velocity** until **negative limit switch valid.**
3. Move in **positive direction** at **low velocity** and stops **after negative limit switch** and **first encoder Z-signal valid**

*If the positive limit signal is valid during the homing process, the status word (6041h) bit 13 will be valid, indicating homing error and the motor will stop immediately.*

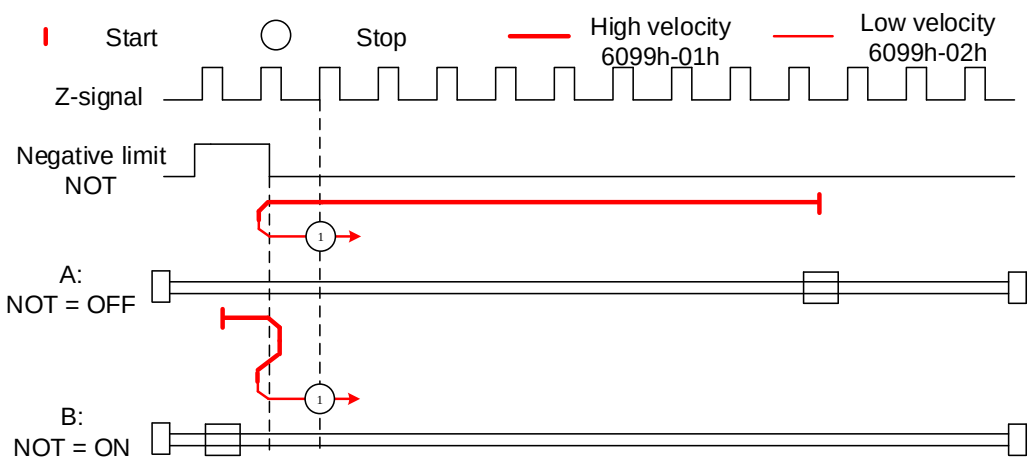


**Mode 2:**

Diagram A: *Positive limit switch = OFF*

1. Move in **positive direction** at **high velocity** until **positive limit switch valid.**
2. Move in **negative direction** at **low velocity** and stops **after positive limit switch** and **first encoder Z-signal valid**

Diagram B: *Positive limit switch = ON*

1. Start to move at **positive limit switch position** in **negative direction** at **high velocity** until **positive limit switch invalid.**
2. Move in **positive direction** at **high velocity** until **positive limit switch valid.**
3. Move in **negative direction** at **low velocity** and stops **after positive limit switch** and **first encoder Z-signal valid**

*If the negative limit signal is valid during the homing process, the status word (6041h) bit 13 will be valid, indicating homing error and the motor will stop immediately.*

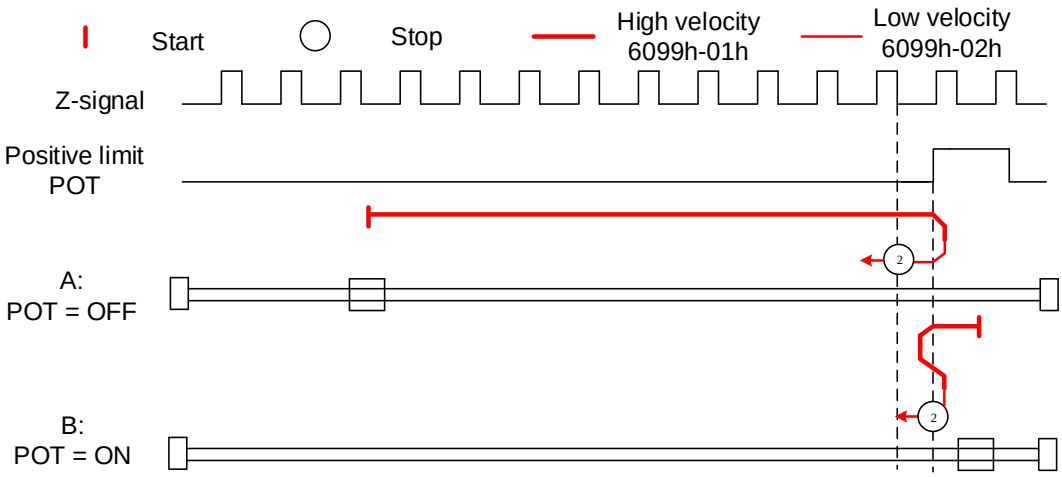


## Homing switch signal+Z-signal mode

**Mode 3:**

Diagram A: *Homing switch = OFF*

1. Move in **positive direction** at **high velocity** until **homing switch valid.**
2. Move in **negative direction** at **low velocity** and stops **after homing switch** and **first encoder Z-signal valid**

Diagram B: *Homing switch = ON*

1. Start to move at **homing switch position** in **negative direction** at **high velocity** until **after homing switch.**
2. Move in **positive direction** at **high velocity** until **homing switch valid.**
3. Move in **negative direction** at **low velocity** and stops **after homing switch** and **first encoder Z-signal valid**

*If the positive/negative limit switch signal is valid during the homing process, the status word (6041h) bit 13 will be valid, indicating homing error and the motor will stop immediately.*

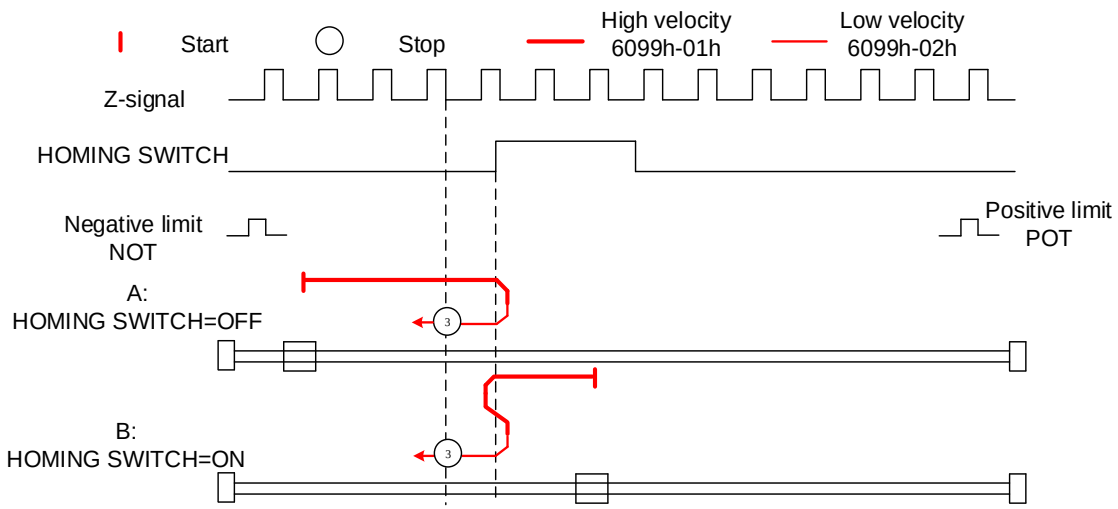


**Mode 4:**

Diagram A: *Homing switch = OFF*

1. Move in **positive direction** at **high velocity** until **homing switch valid.**
2. Move in **negative direction** at **high velocity** until **homing switch invalid.**
3. Move in **positive direction** at **low velocity** and stops after **homing switch valid** and **first encoder Z-signal valid**

Diagram B: *Homing switch = ON*

1. Start to move at **homing switch position** in **negative direction** at **high velocity** until **after homing switch.**
2. Move in **positive direction** at **low velocity** and stops after **homing switch valid** and **first encoder Z-signal valid**

*If the positive/negative limit switch signal is valid during the homing process, the status word (6041h) bit 13 will be valid, indicating homing error and the motor will stop immediately.*

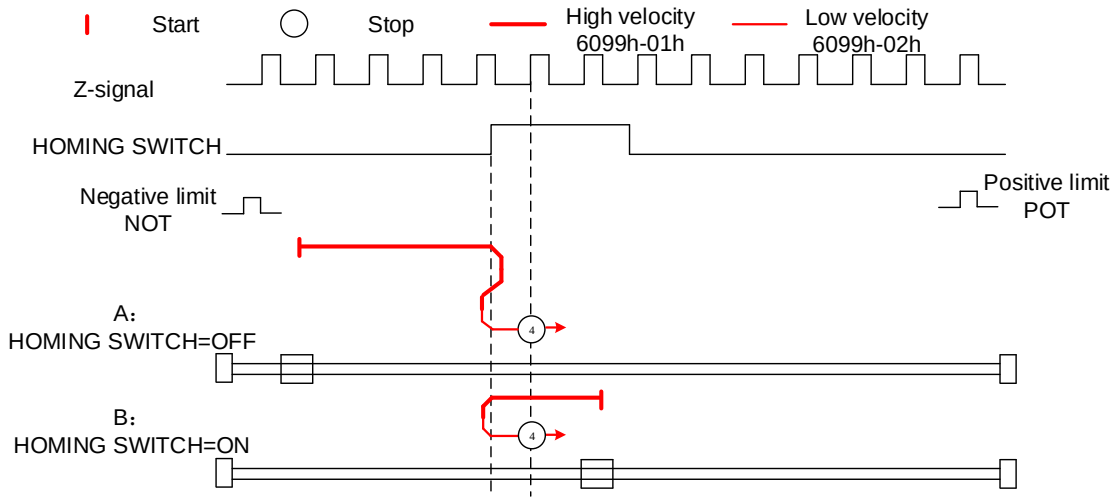


**Mode 5:**

Diagram A: *Homing switch = OFF*

1. Move in **negative direction** at **high velocity** until **homing switch valid.**
2. Move in **positive direction** at **low velocity** and stops **after homing switch** and **first encoder Z-signal valid**

Diagram B: *Homing switch = ON*

1. Start to move at **homing switch position** in **positive direction** at **high velocity** until **after homing switch.**
2. Move in **negative direction** at **high velocity** until **homing switch valid.**
3. Move in **positive direction** at **low velocity** and stops **after homing switch** and **first encoder Z-signal valid**

*If the positive/negative limit switch signal is valid during the homing process, the status word (6041h) bit 13 will be valid, indicating homing error and the motor will stop immediately.*

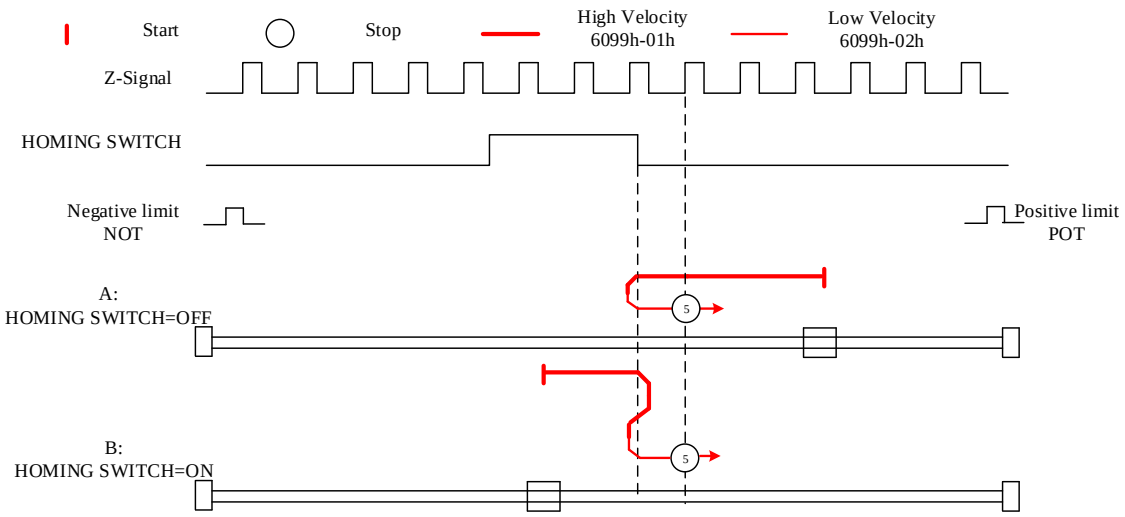


**Mode 6:**

Diagram A: *Homing switch = OFF*

1. Move in **negative direction** at **high velocity** until **homing switch valid.**
2. Move in **positive direction** at **high velocity** until **homing switch invalid.**
3. Move in **negative direction** at **low velocity** and stops after **homing switch valid** and **first encoder Z-signal valid**

Diagram B: *Homing switch = ON*

1. Start to move at **homing switch position** in **positive direction** at **high velocity** until **after homing switch.**
2. Move in **negative direction** at **low velocity** and stops after **homing switch valid** and **first encoder Z-signal valid**

*If the positive/negative limit switch signal is valid during the homing process, the status word (6041h) bit 13 will be valid, indicating homing error and the motor will stop immediately.*

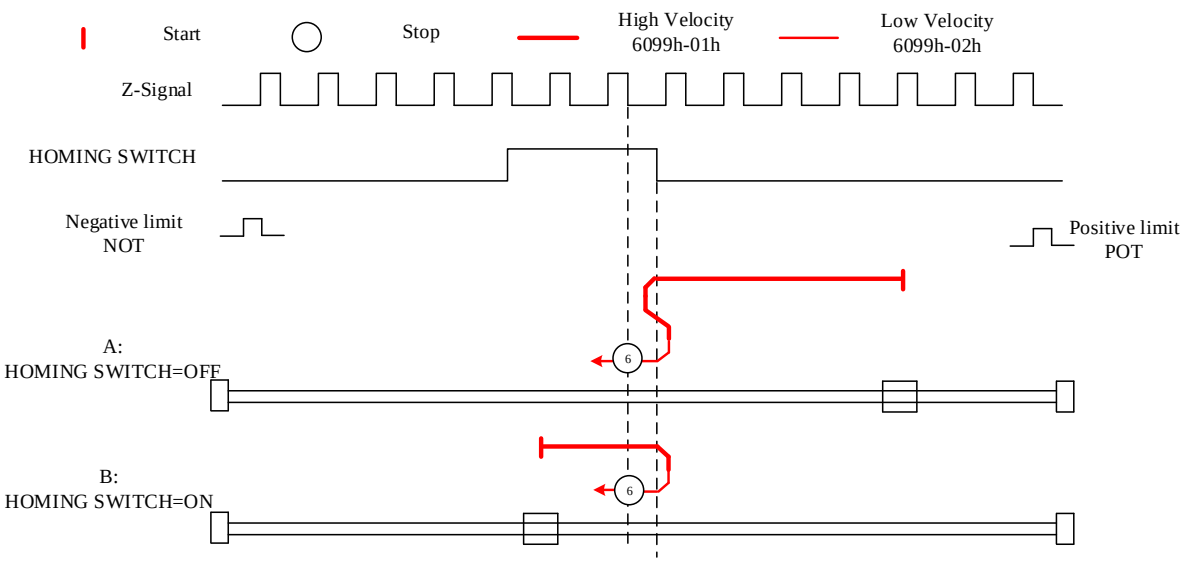


## Limit switch signal+homing switch signal+Z-signal mode

**Mode 7**

Diagram A: *Homing switch & positive limit switch = OFF*

1. Move in **positive direction** at **high velocity** until **homing switch valid.**
2. Move in **negative direction** at **low velocity** and stops after **homing switch** and **first encoder Z-signal valid.**

Diagram B: *Homing switch = ON, positive limit switch = OFF*

1. Start to move at **homing switch position** in **negative direction** at **high velocity** until **after homing switch.**
2. Move in **positive direction** at **high velocity** until **homing switch valid.**
3. Move in **negative direction** at **low velocity** and stops **after homing switch** and **first encoder Z-signal valid**

Diagram C: *Homing switch & positive limit switch = OFF*

1. Move in **positive direction** at **high velocity** until **positive limit switch valid**.
2. Move in **negative direction** at **high velocity** until **after homing switch**.
3. Move in **positive direction** at **high velocity** until **homing switch valid**.
4. Move in **negative direction** at **low velocity** and stops **after homing switch** and **first encoder Z signal valid**

*If the negative limit switch signal is valid during the homing process, the status word (6041h) bit 13 will be valid, indicating homing error and the motor will stop immediately.*

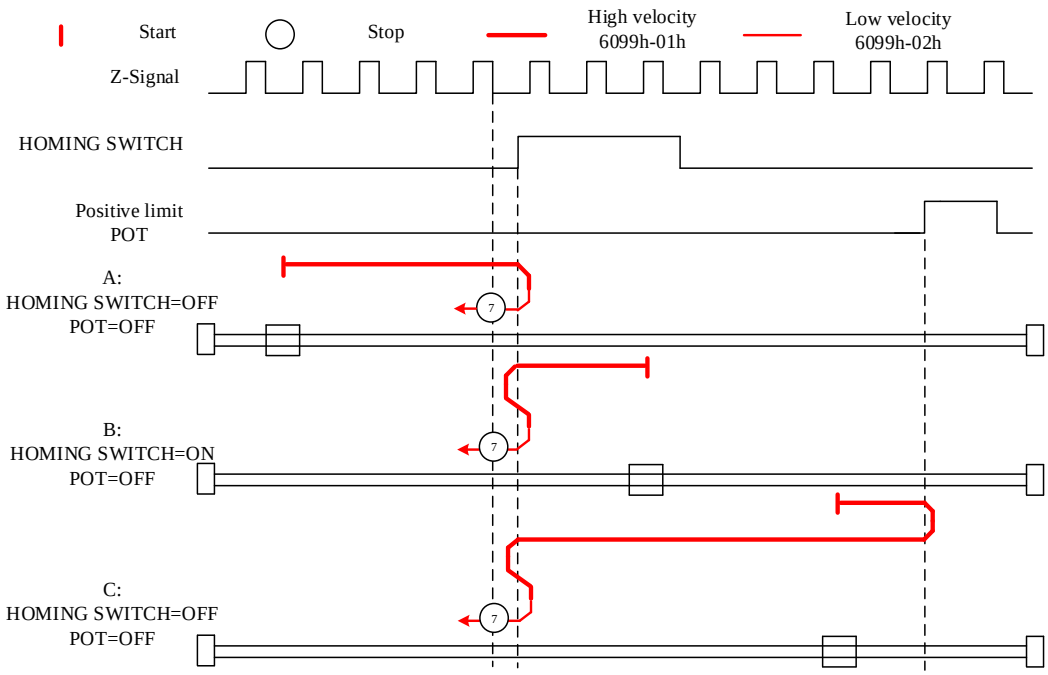


**Mode 8**

Diagram A: *Homing switch & positive limit switch = OFF*

1. Move in **positive direction** at **high velocity** until **homing switch valid.**
2. Move in **negative direction** at **high velocity** until **after homing switch.**
3. Move in **positive direction** at **low velocity** and stops after **homing switch valid** and **first encoder Z-signal valid.**

Diagram B: *Homing switch = ON, positive limit switch = OFF*

1. Start to move at **homing switch position** in **negative direction** at **high velocity** until **after homing switch.**
2. Move in **positive direction** at **low velocity** and stops after **homing switch valid** and **first encoder Z-signal valid**

Diagram C: *Homing switch & positive limit switch = OFF*

1. Move in **positive direction** at **high velocity** until **positive limit switch valid**.
2. Move in **negative direction** at **high velocity** until **after homing switch**.
3. Move in **positive direction** at **low velocity** and stops after **homing switch valid** and **first encoder Z-signal valid.**

*If the negative limit switch signal is valid during the homing process, the status word (6041h) bit 13 will be valid, indicating homing error and the motor will stop immediately.*

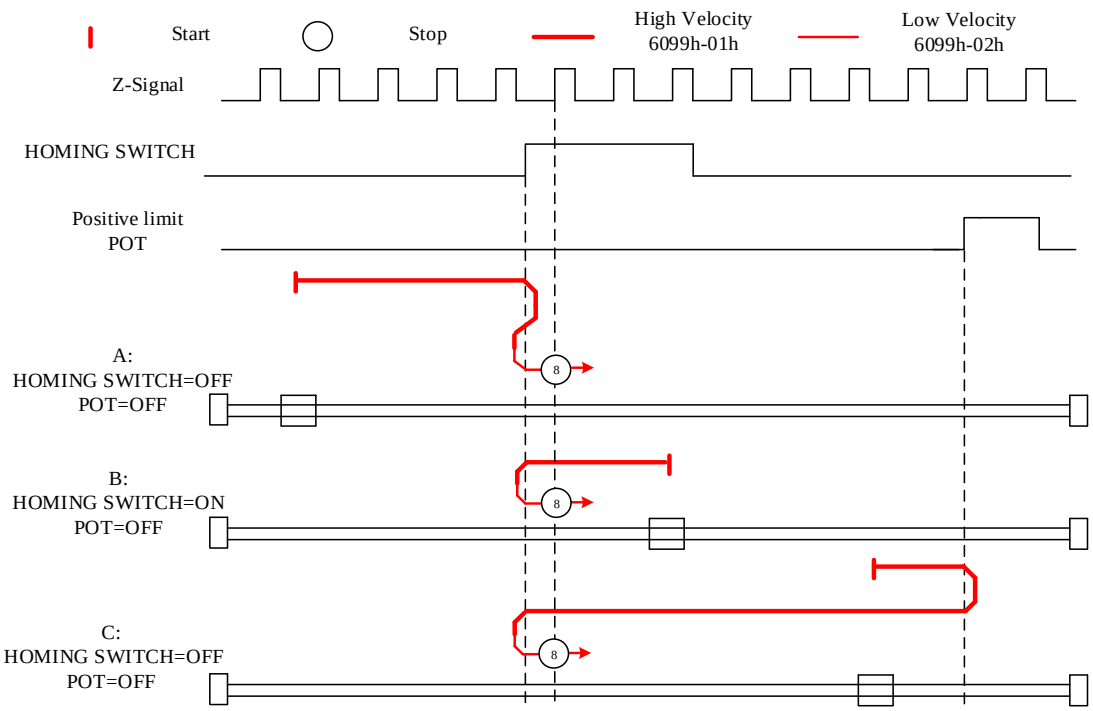


**Mode 9**

Diagram A: *Homing switch & positive limit switch = OFF*

1. Move in **positive direction** at **high velocity** until **after homing switch.**
2. Move in **negative direction** at **low velocity** and stops after **homing switch valid** and **first encoder Z-signal valid.**

Diagram B: *Homing switch = ON, positive limit switch = OFF*

1. Start to move at **homing switch position** in **positive direction** at **high velocity** until **homing switch invalid.**
2. Move in **negative direction** at **low velocity** and stops after **homing switch valid** and **first encoder Z-signal valid**

Diagram C: *Homing switch & positive limit switch = OFF*

1. Move in **positive direction** at **high velocity** until **positive limit switch valid**.
2. Move in **negative direction** at **high velocity** until **homing switch valid**.
3. Move in **positive direction** at **high velocity** until **after homing switch**.
4. Move in **negative direction** at **low velocity** and stops after **homing switch valid** and **first encoder Z signal valid**

*If the negative limit switch signal is valid during the homing process, the status word (6041h) bit 13 will be valid, indicating homing error and the motor will stop immediately.*

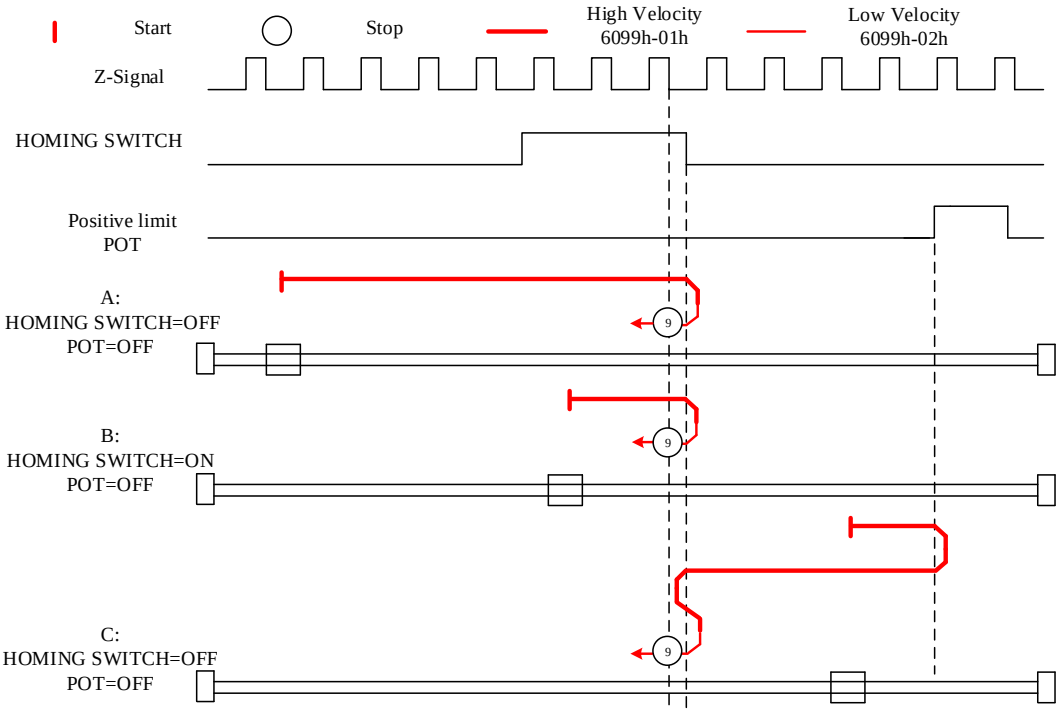


**Mode 10**

Diagram A: *Homing switch & positive limit switch = OFF*

1. Move in **positive direction** at **high velocity** until **after homing switch.**
2. Move in **negative direction** at **high velocity** until **homing switch valid.**
3. Move in **positive direction** at **low velocity** and stops **after homing switch** and **first encoder Z-signal valid.**

Diagram B: *Homing switch = ON, positive limit switch = OFF*

1. Start to move at **homing switch position** in **positive direction** at **high velocity** until **after homing switch.**
2. Move in **negative direction** at **high velocity** until **homing switch valid.**
3. Move in **positive direction** at **low velocity** and stops **after homing switch** and **first encoder Z-signal valid**

Diagram C: *Homing switch & positive limit switch = OFF*

1. Move in **positive direction** at **high velocity** until positive **limit switch valid**.
2. Move in **negative direction** at **high velocity** until **homing switch valid**.
3. Move in **positive direction** at **low velocity** and stops **after homing switch** and **first encoder Z signal valid**

*If the negative limit switch signal is valid during the homing process, the status word (6041h) bit 13 will be valid, indicating homing error and the motor will stop immediately.*

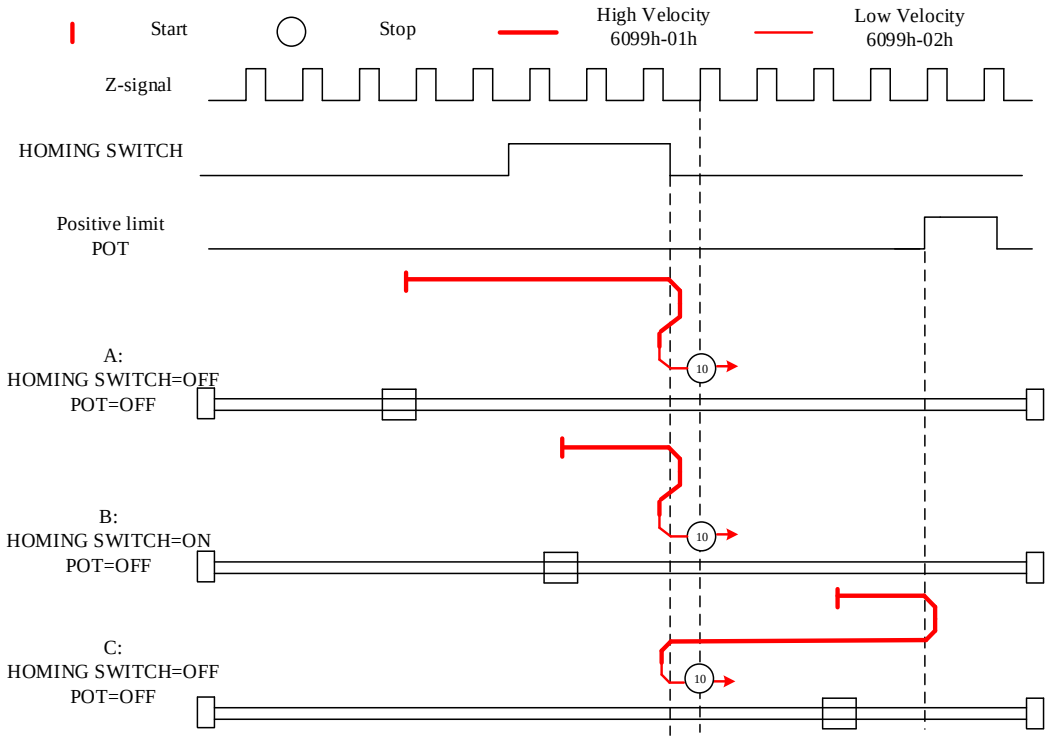


**Mode 11**

Diagram A: *Homing switch & negative limit switch = OFF*

1. Move in **negative direction** at **high velocity** until **homing switch valid.**
2. Move in **positive direction** at **low velocity** and stops **after homing switch** and **first encoder Z-signal valid**

Diagram B: *Homing switch = ON, negative limit switch = OFF*

1. Start to move at **homing switch position** in **positive direction** at **high velocity** until **after homing switch.**
2. Move in **negative direction** at **high velocity** until **homing switch valid.**
3. Move in **positive direction** at **low velocity** and stops **after homing switch** and **first encoder Z-signal valid**

Diagram C: *Homing switch & negative limit switch = OFF*

1. Move in **negative direction** at **high velocity** until the **negative limit switch valid**.
2. Move in **positive direction** at **high velocity** until **homing switch invalid**.
3. Move in **negative direction** at **high velocity** until **homing switch valid**.
4. Move in **positive direction** at **low velocity** and stops **after homing switch** and **first encoder Z signal valid**

*If the positive limit switch signal is valid during the homing process, the status word (6041h) bit 13 will be valid, indicating homing error and the motor will stop immediately.*

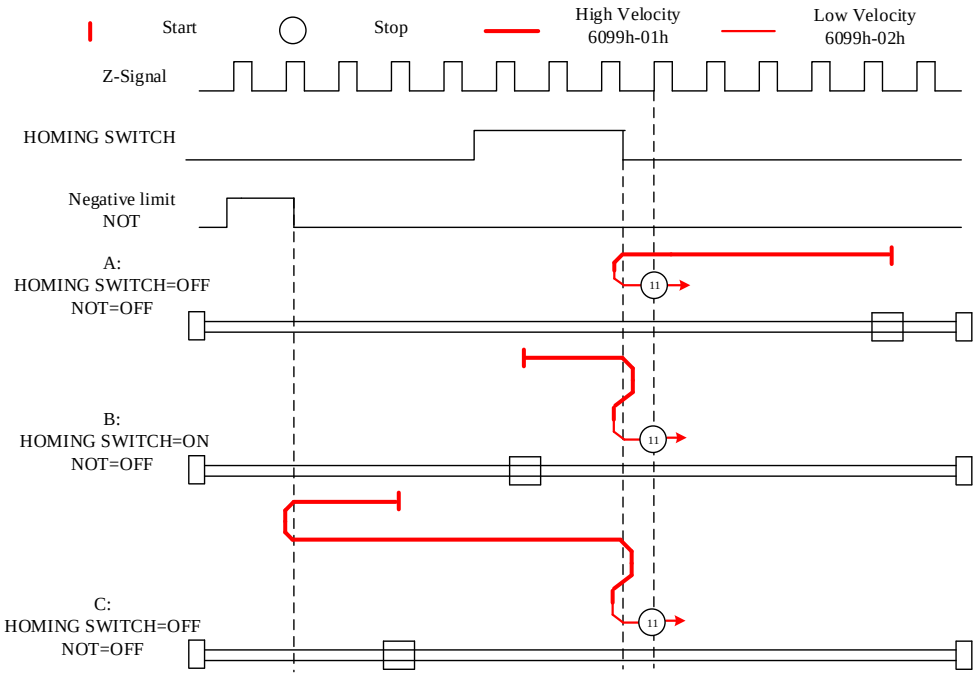


**Mode 12**

Diagram A: *Homing switch & negative limit switch = OFF*

1. Move in **negative direction** at **high velocity** until **homing switch valid.**
2. Move in **positive direction** at **high velocity** until **after homing switch.**
3. Move in **negative direction** at **low velocity** and stops after **homing switch valid** and **first encoder Z-signal valid**

Diagram B: *Homing switch = ON, negative limit switch = OFF*

1. Move at **homing switch position** in **negative direction** at **high velocity** until **after homing switch**.
2. Move in **positive direction** at **low velocity** and stops after **homing switch valid** and **first encoder Z-signal valid.**

Diagram C: *Homing switch & negative limit switch = OFF*

1. Move in **negative direction** at **high velocity** until **negative limit switch valid.**
2. Move in **positive direction** at **high velocity** until **after homing switch**.
3. Move in **negative direction** at **low velocity** and stops after **homing switch valid** and **first encoder Z-signal valid.**

*If the positive limit switch signal is valid during the homing process, the status word (6041h) bit 13 will be valid, indicating homing error and the motor will stop immediately.*

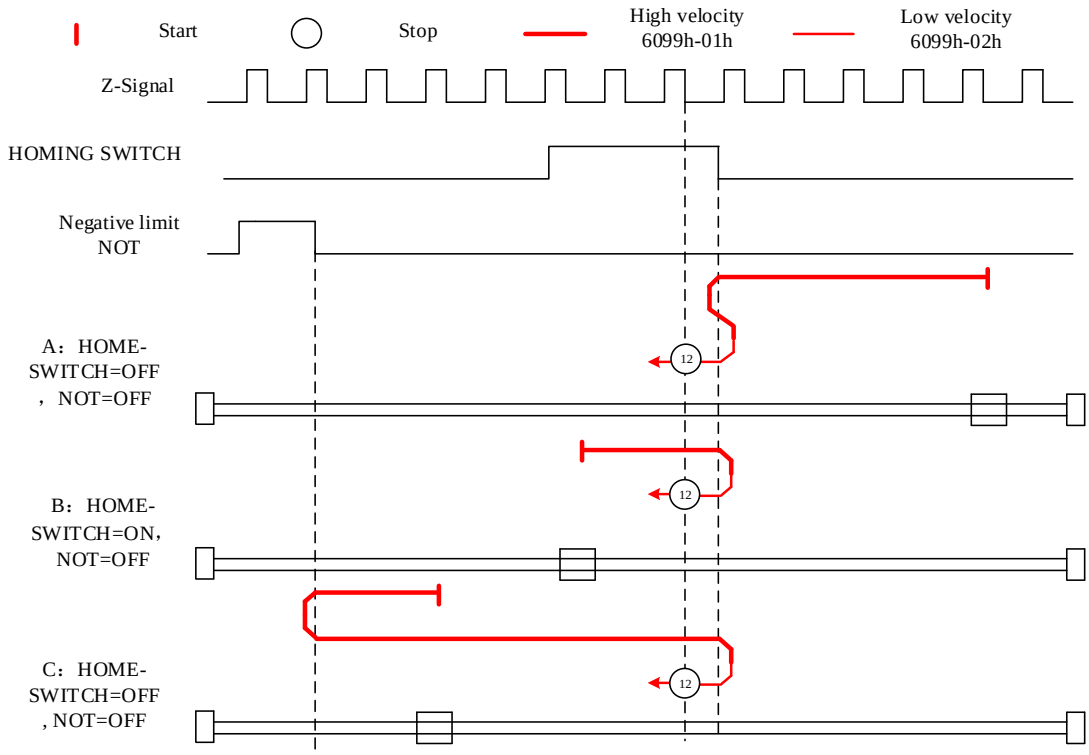


**Mode 13**

Diagram A: *Homing switch & negative limit switch = OFF*

1. Move in **negative direction** at **high velocity** until **after homing switch**.
2. Move in **positive direction** at **low velocity** and stops after **homing switch valid** and **first encoder Z-signal valid**.

Diagram B: *Homing switch = ON, negative limit switch = OFF*

1. Start to move at **homing switch position** in **negative direction** at **high velocity** until **after homing switch.**
2. Move in positive **direction** at **low velocity** and stops after **homing switch valid** and **first encoder Z-signal valid.**

Diagram C: *Homing switch & negative limit switch = OFF*

1. Move in **negative direction** at **high velocity** until **negative limit switch valid**.
2. Move in **positive direction** at **high velocity** until **homing switch valid**.
3. Move in **negative direction** at **high velocity** until **after homing switch**.
4. Move in **positive direction** at **low velocity** and stops after **homing switch valid** and **first encoder Z-signal valid.**

*If the positive limit switch signal is valid during the homing process, the status word (6041h) bit 13 will be valid, indicating homing error and the motor will stop immediately.*

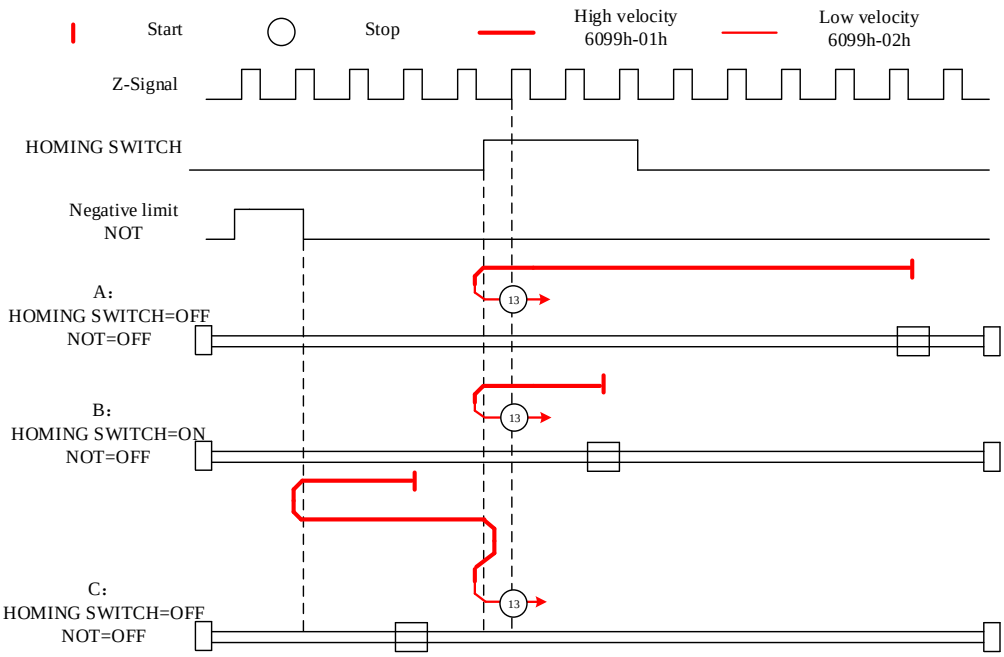


**Mode 14**

Diagram A: *Homing switch & negative limit switch = OFF*

1. Move in **negative direction** at **high velocity** until **after homing switch**.
2. Move in **positive direction** at **high velocity** until **homing switch valid**.
3. Move in **negative direction** at **low velocity** and stops **after homing switch** and **first encoder Z-signal valid.**

Diagram B: *Homing switch = ON, negative limit switch = OFF*

1. Start to move at **homing switch position** in **negative direction** at **high velocity** until **homing switch invalid**.
2. Move in **positive direction** until **homing switch valid**.
3. Move in **negative direction** at **low velocity** and stops **after homing switch** and **first encoder Z signal valid.**

Diagram C: *Homing switch & negative limit switch = OFF*

1. Move in **negative direction** at **high velocity** until **negative limit switch valid**.
2. Move in **positive direction** at **high velocity** until **homing switch valid**.
3. Move in **negative direction** at **low velocity** and stops **after homing switch** and **first encoder Z-signal valid.**

*If the positive limit switch signal is valid during the homing process, the status word (6041h) bit 13 will be valid, indicating homing error and the motor will stop immediately.*

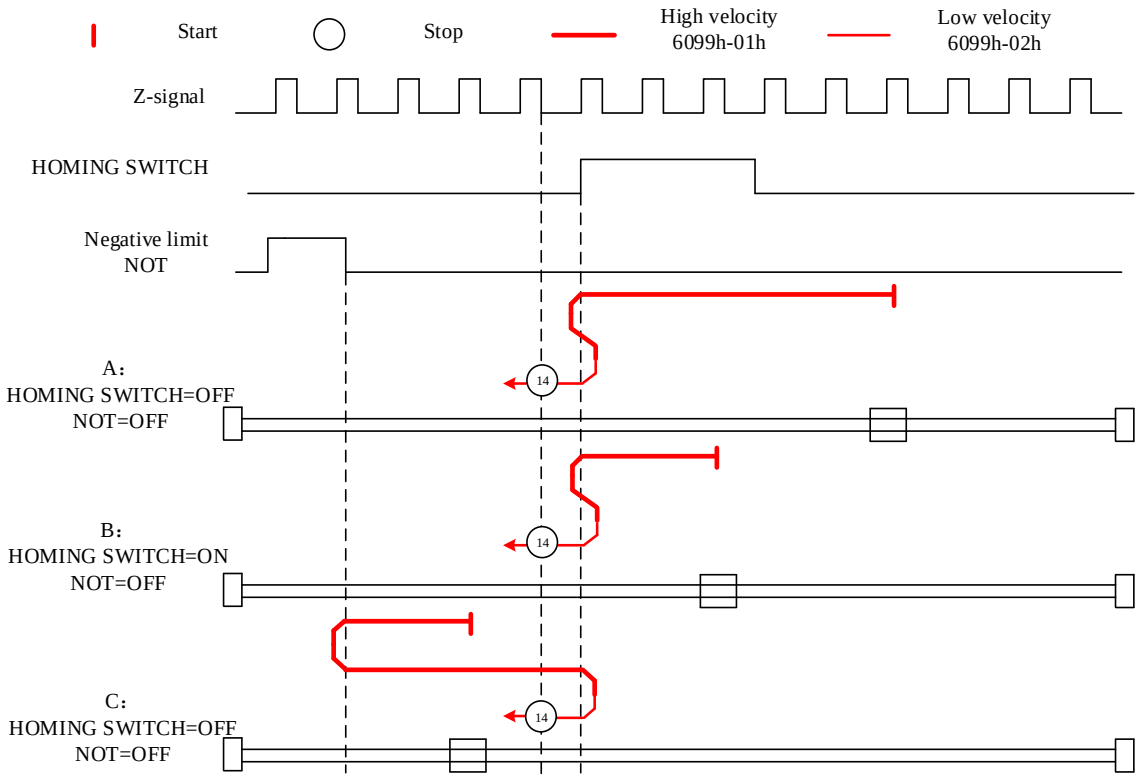


## Limit switch signal trigger mode

**Mode 17:**

This mode is similar to mode 1. Only difference is that homing point detection is not through Z-signal but through triggering of negative limit switch signal

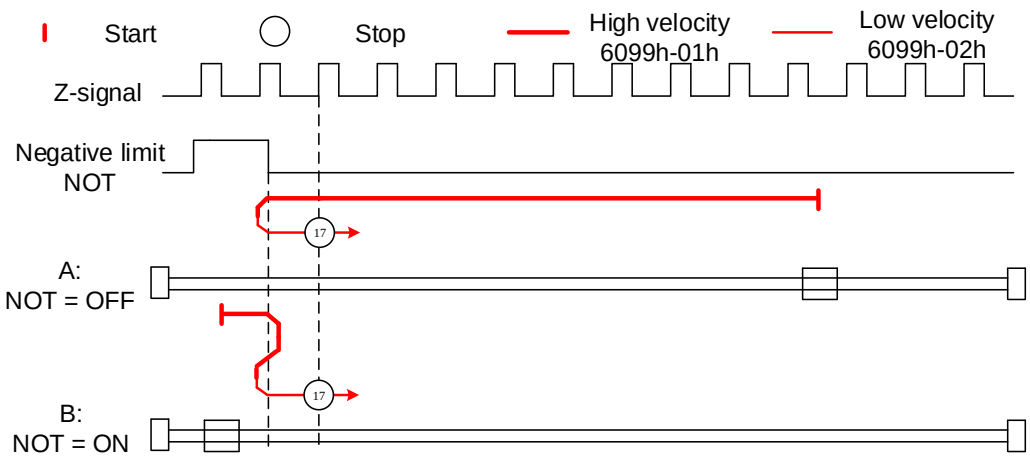

**Mode 18:**

This mode is similar to mode 2. Only difference is that homing point detection is not through Z-signal but through switching of positive limit switch signal

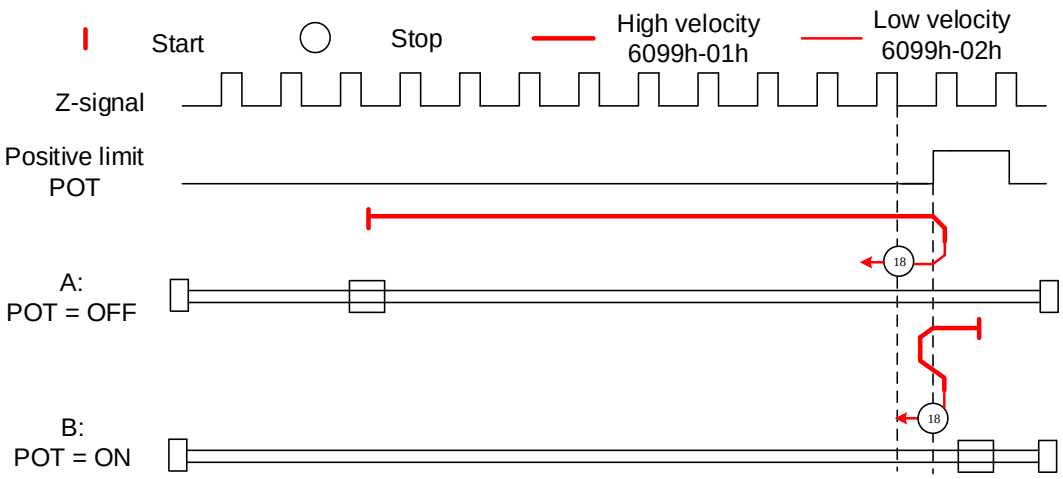


## Homing switch signal trigger mode

**Mode 19:**

This mode is similar to mode 3. Only difference is that homing point detection is not through Z-signal but through triggering of homing switch signal

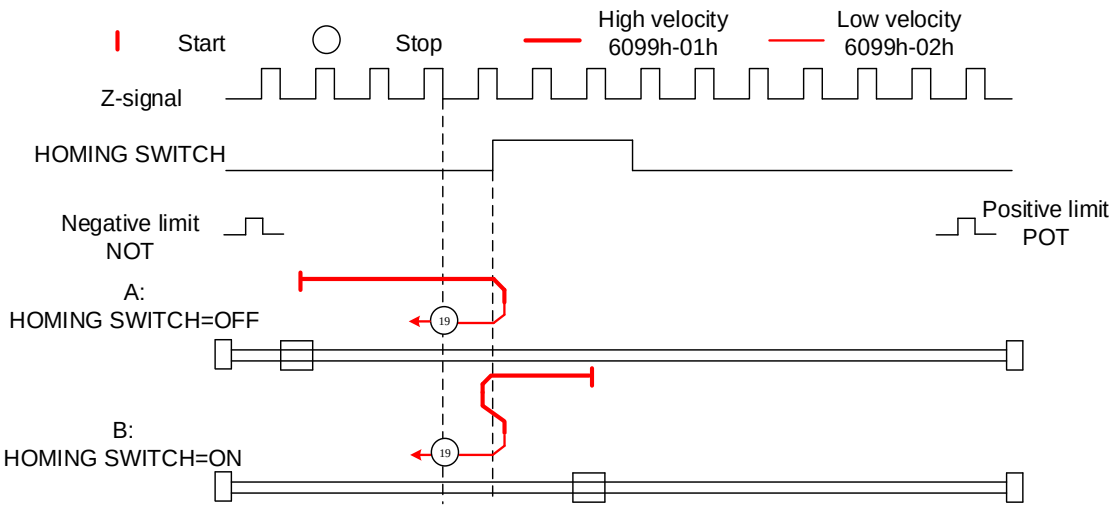

**Mode 20:**

This mode is similar to mode 4. Only difference is that homing point detection is not through Z-signal but through triggering of homing switch signal

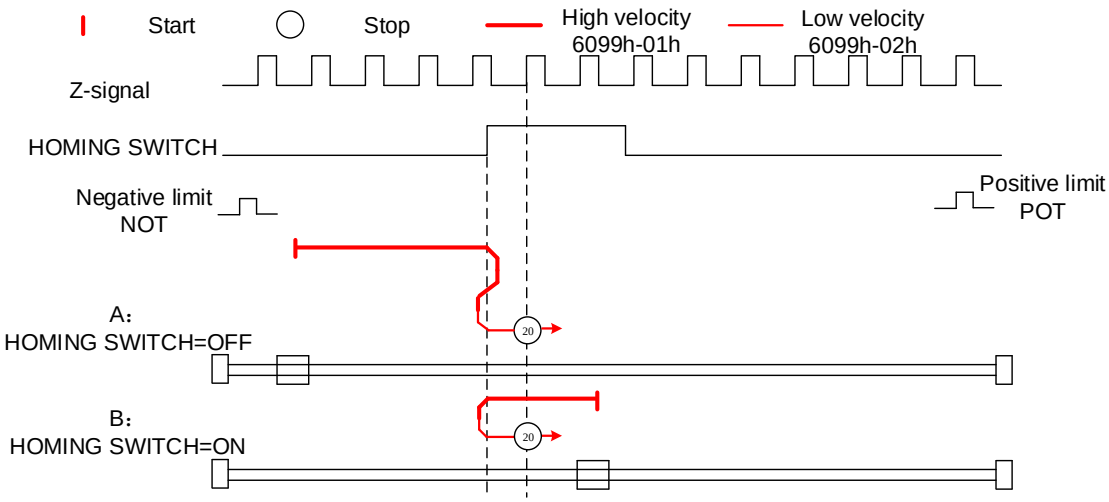


**Mode 21:**

This mode is similar to mode 5. Only difference is that homing point detection is not through Z-signal but through triggering of homing switch signal.

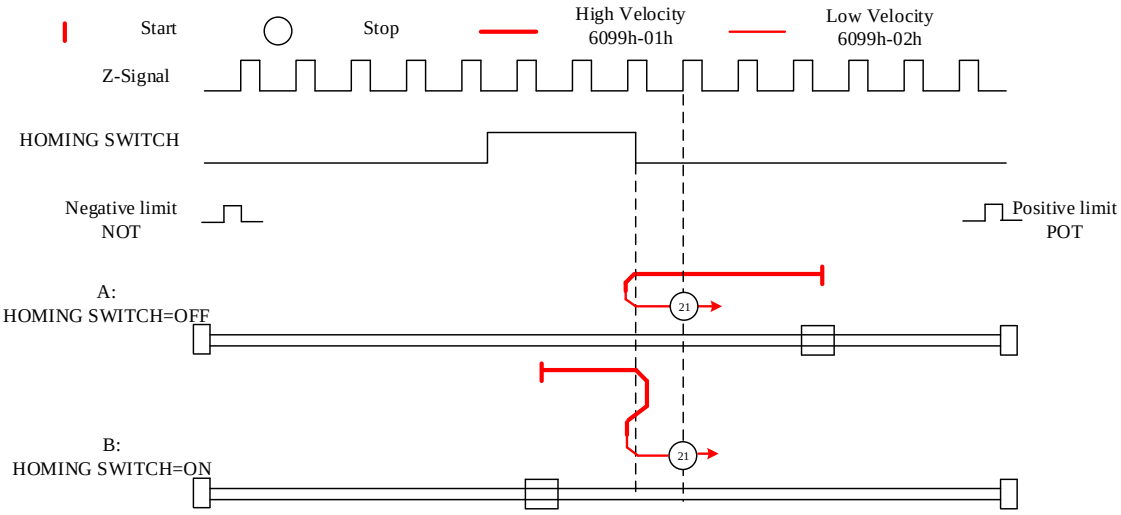

**Mode 22:**

This mode is similar to mode 6. Only difference is that homing point detection is not through Z-signal but through triggering of homing switch signal.

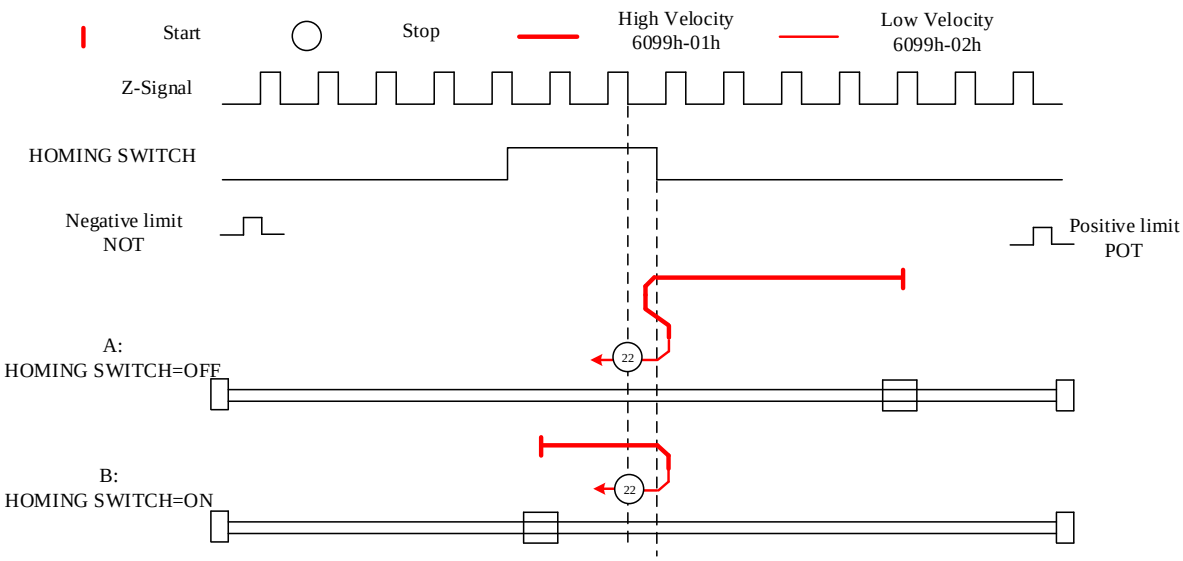


**Mode 23:**

This mode is similar to mode 7. Only difference is that homing point detection is not through Z-signal but through triggering of homing switch signal.

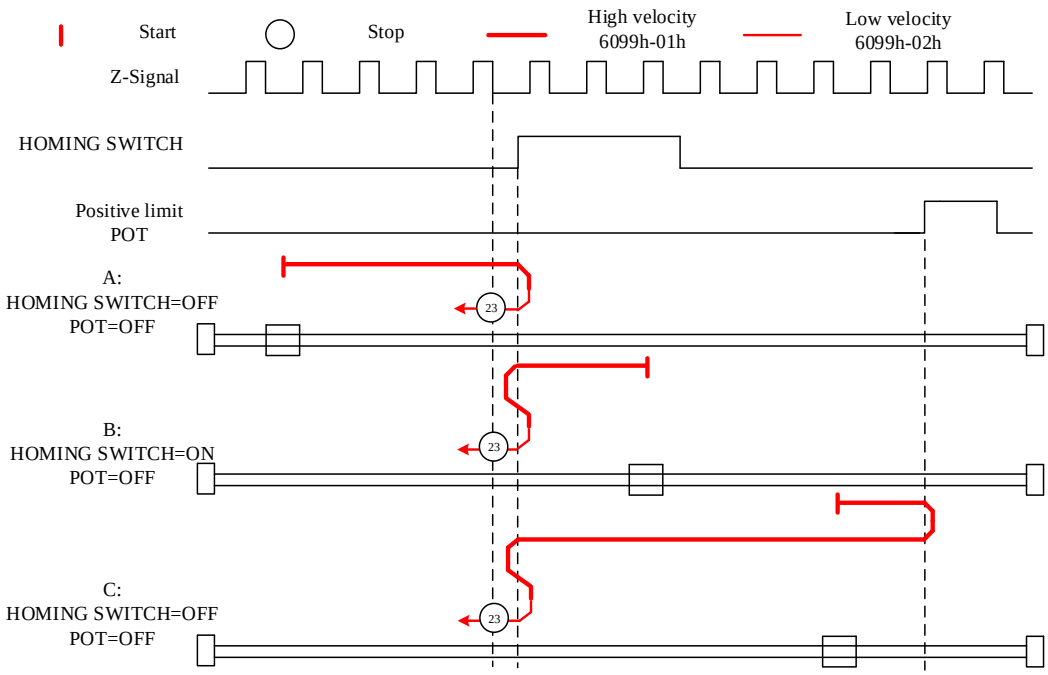

**Mode 24:**

This mode is similar to mode 8. Only difference is that homing point detection is not through Z-signal but through triggering of homing switch signal.

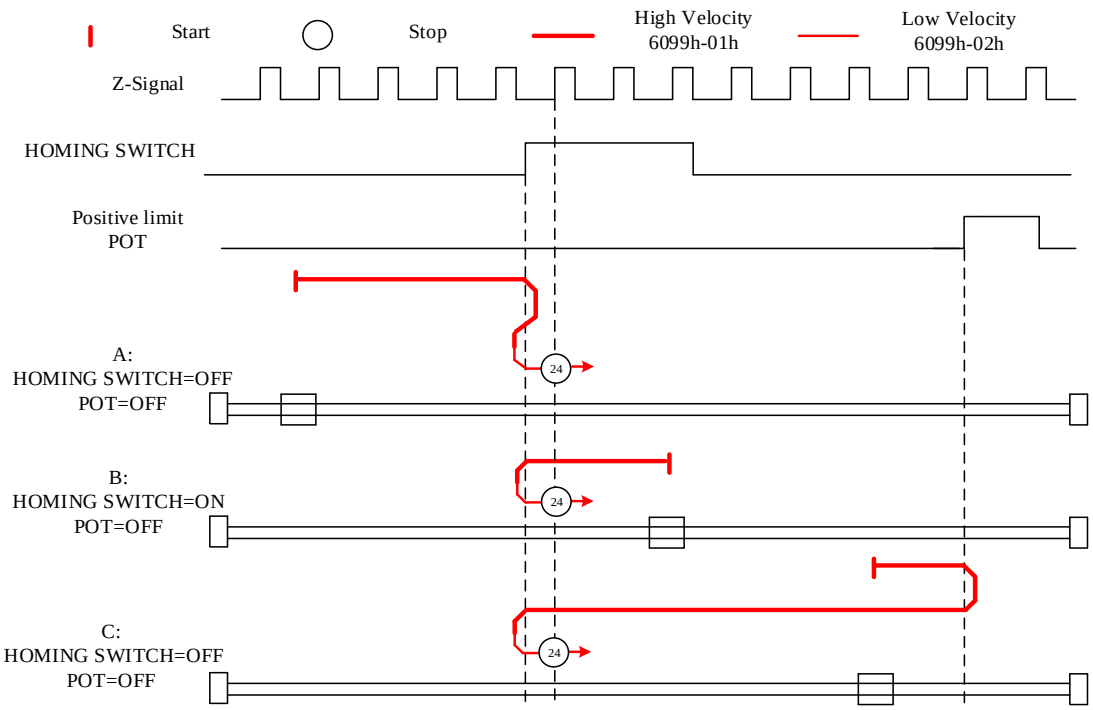


**Mode 25:**

This mode is similar to mode 9. Only difference is that homing point detection is not through Z-signal but through triggering of homing switch signal

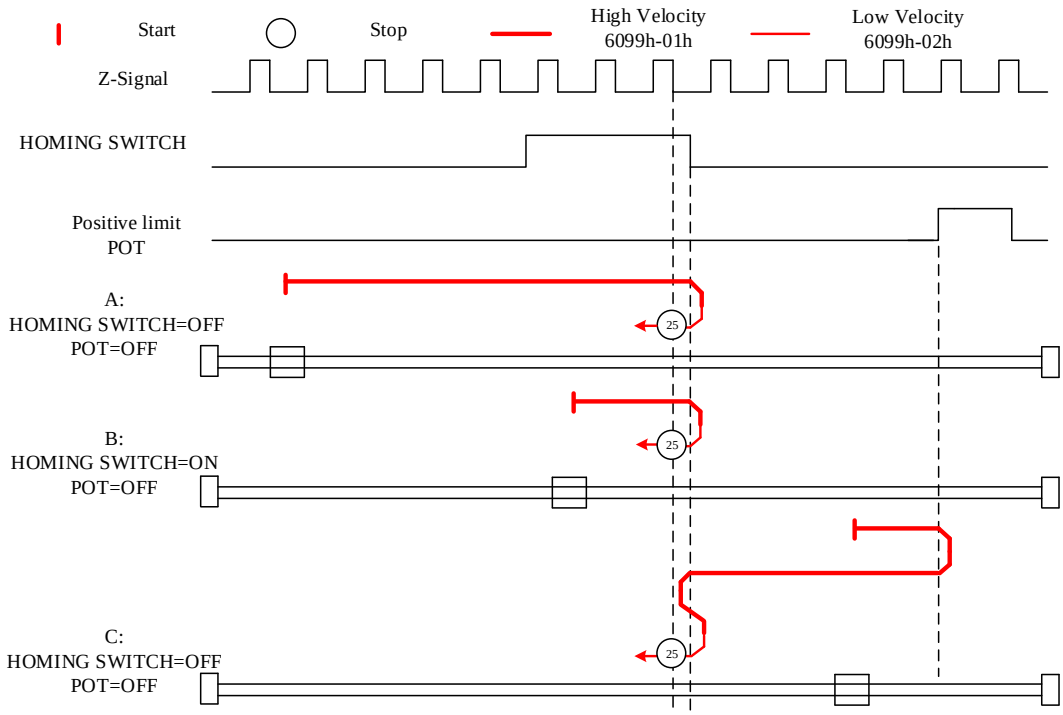


**Mode 26:**

This mode is similar to mode 10. Only difference is that homing point detection is not through Z-signal but through triggering of homing switch signal

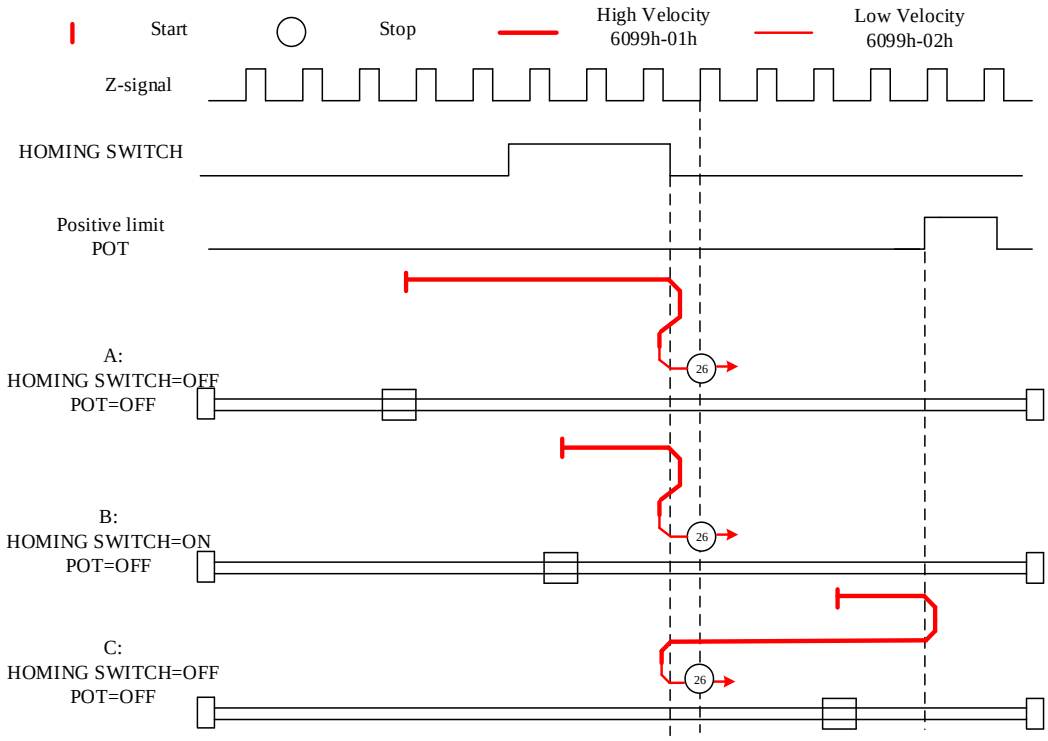


**Mode 27:**

This mode is similar to mode 11. Only difference is that homing point detection is not through Z-signal but through triggering of homing switch signal

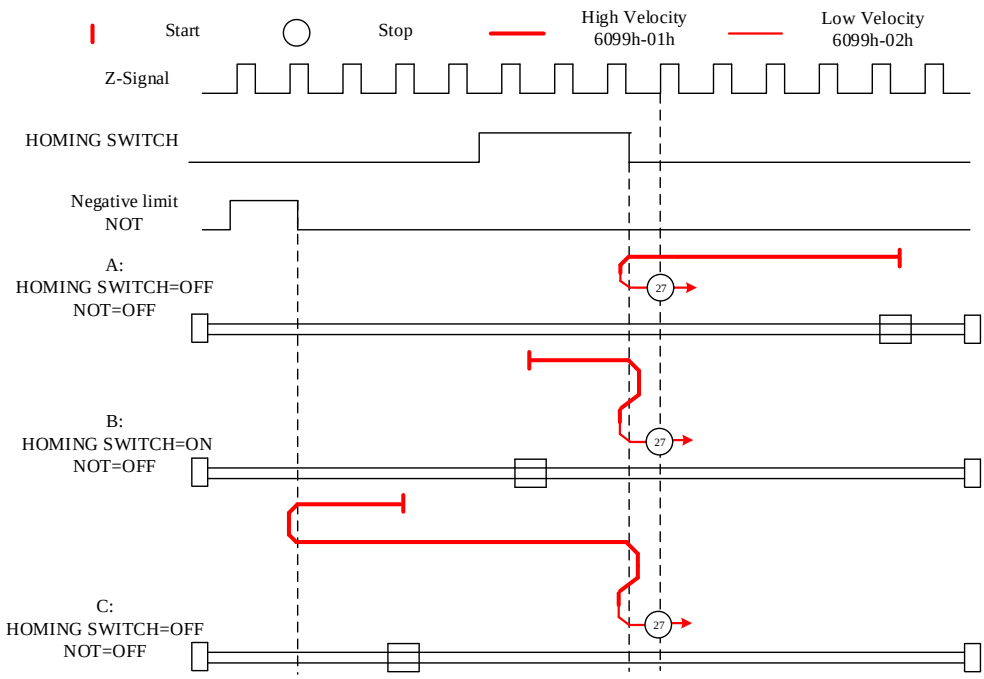


**Mode 28:**

This mode is similar to mode 12. Only difference is that homing point detection is not through Z-signal but through triggering of homing switch signal

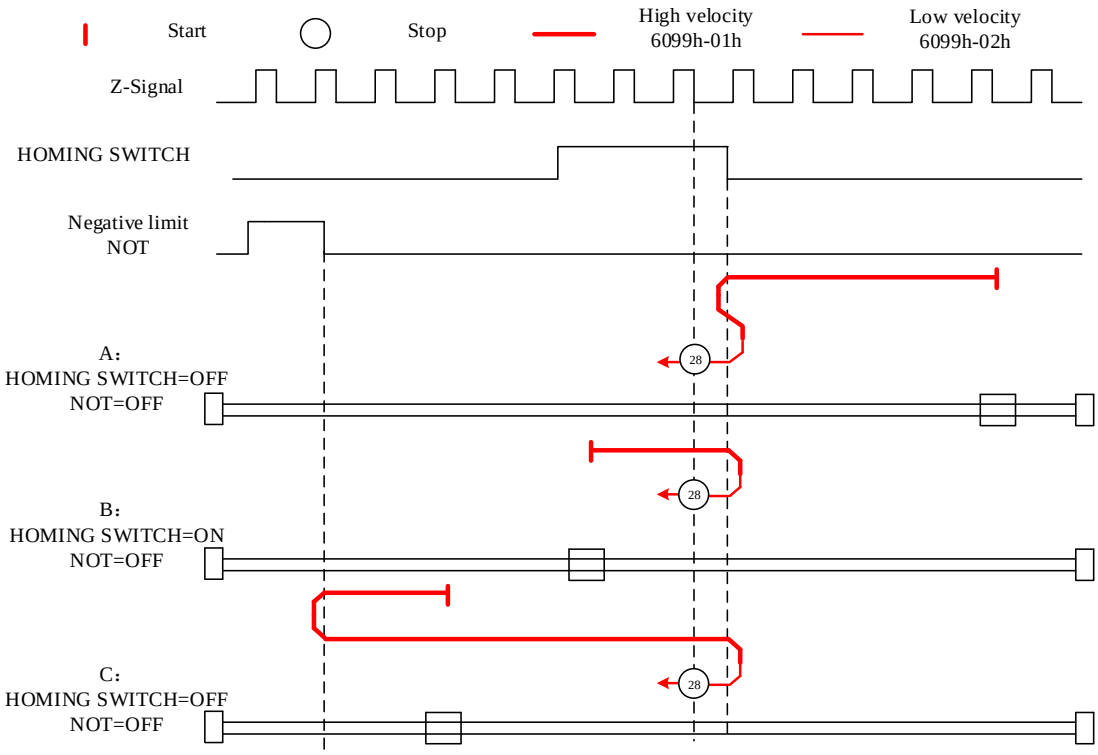


**Mode 29:**

This mode is similar to mode 13. Only difference is that homing point detection is not through Z-signal but through triggering of homing switch signal

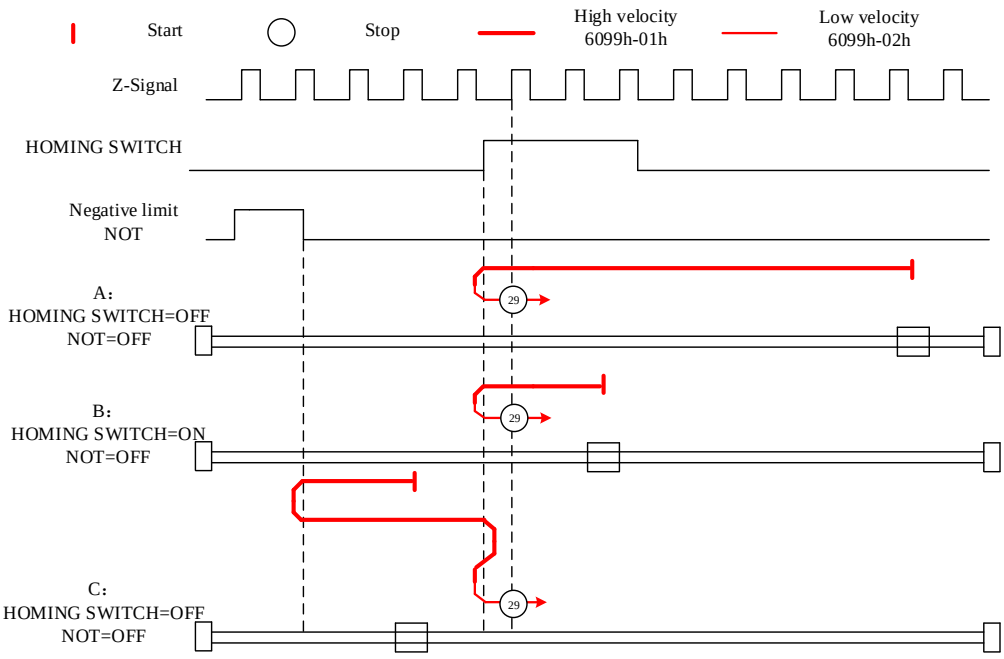


**Mode 30:**

This mode is similar to mode 14. Only difference is that homing point detection is not through Z-signal but through triggering of homing switch signal

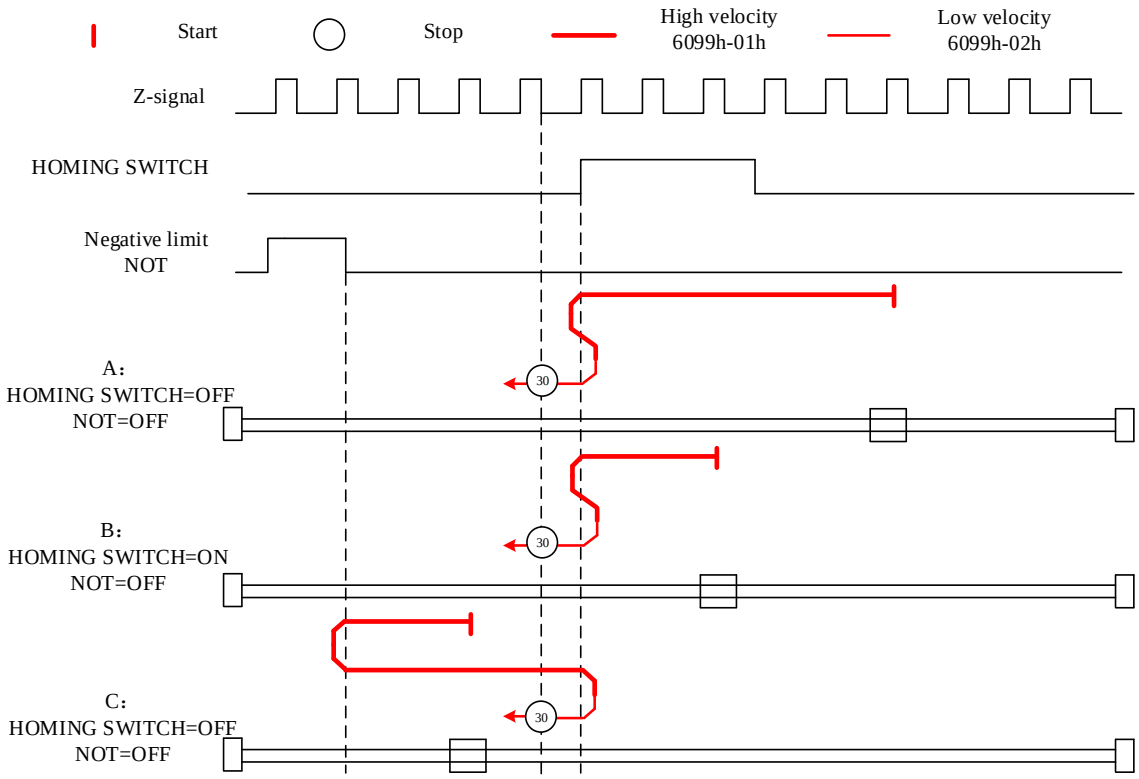


## Other modes

**Mode 33:**

The motor starts to move in **negative direction** and stops when the **Z-signal is valid**.

*If the positive/negative limit switch signal or homing switch is valid during the homing process, the status word (6041h) bit 13 will be valid, indicating homing error and the motor will stop immediately.*

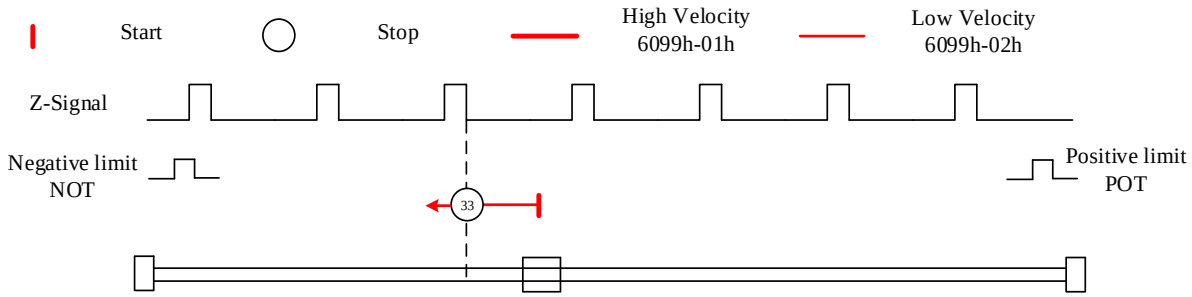

**Mode 34:**

The motor starts to move in **positive direction** and stops when the **Z-signal is valid**.

*If the positive/negative limit switch signal or homing switch is valid during the homing process, the status word (6041h) bit 13 will be valid, indicating homing error and the motor will stop immediately.*

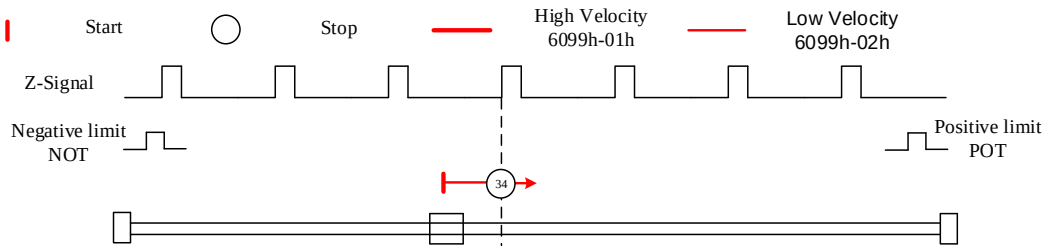


**Mode 35/37:**

Set the current position as homing point. Using this mode, motor doesn't have to be enabled. Set control word 6040h bit 4 from 0 to 1.

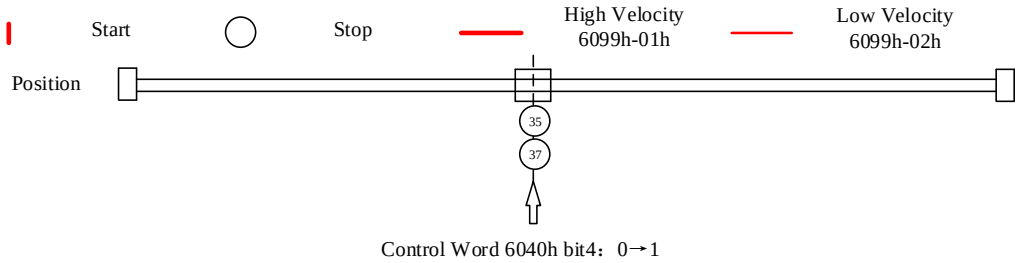


<u>Application: Realization of homing motion</u>

Step 1: 6060h = 6, determine if 6061h = 6. Servo driver is now under HM mode.

Step 2: Write motion parameters: Homing method 6098h, Homing velocity 6099h-01/6099h-02 and acceleration/deceleration 609Ah.

Step 3: Enable servo driver and switch bit 4 from 0 to 1 to start homing motion.

## 5.6 Velocity Control Mode（CSV、PV）

### 5.6.1 Common Functions of Velocity Control

| Index | Sub Index | Name | Access | PDO | Mode | |
|---|---|---|---|---|---|---|
| | | | | | CSV | PV |
| 6040 | 0 | Control word | RW | RxPDO | Yes | Yes |
| 6072 | 0 | Max torque | RW | RxPDO | Yes | Yes |
| 6080 | 0 | Maximum motor velocity | RW | RxPDO | Yes | Yes |
| 60B1 | 0 | Velocity feedforward (Restricted by 6080) | RW | RxPDO | Yes | Yes |
| 60B2 | 0 | Torque feedforward | RW | RxPDO | Yes | Yes |
| 60FF | 0 | Target velocity (Restricted by 6080) | RW | RxPDO | Yes | Yes |

| Index | Sub Index | Name | Access | PDO | Mode | |
|---|---|---|---|---|---|---|
| | | | | | CSV | PV |
| 6041 | 0 | Status word | RO | TxPDO | Yes | Yes |
| 6063 | 0 | Actual internal position | RO | TxPDO | Yes | Yes |
| 6064 | 0 | Actual feedback position | RO | TxPDO | Yes | Yes |
| 606B | 0 | Internal command velocity | RO | TxPDO | Yes | Yes |
| 606C | 0 | Actual feedback velocity | RO | TxPDO | Yes | Yes |
| 6074 | 0 | Internal torque command | RO | TxPDO | Yes | Yes |
| 6076 | 0 | Rated torque | RO | TxPDO | Yes | Yes |
| 6077 | 0 | Actual torque | RO | TxPDO | Yes | Yes |

## 5.6.2 Cyclic Synchronous Velocity Mode (CSV)

### CSV Block Diagram

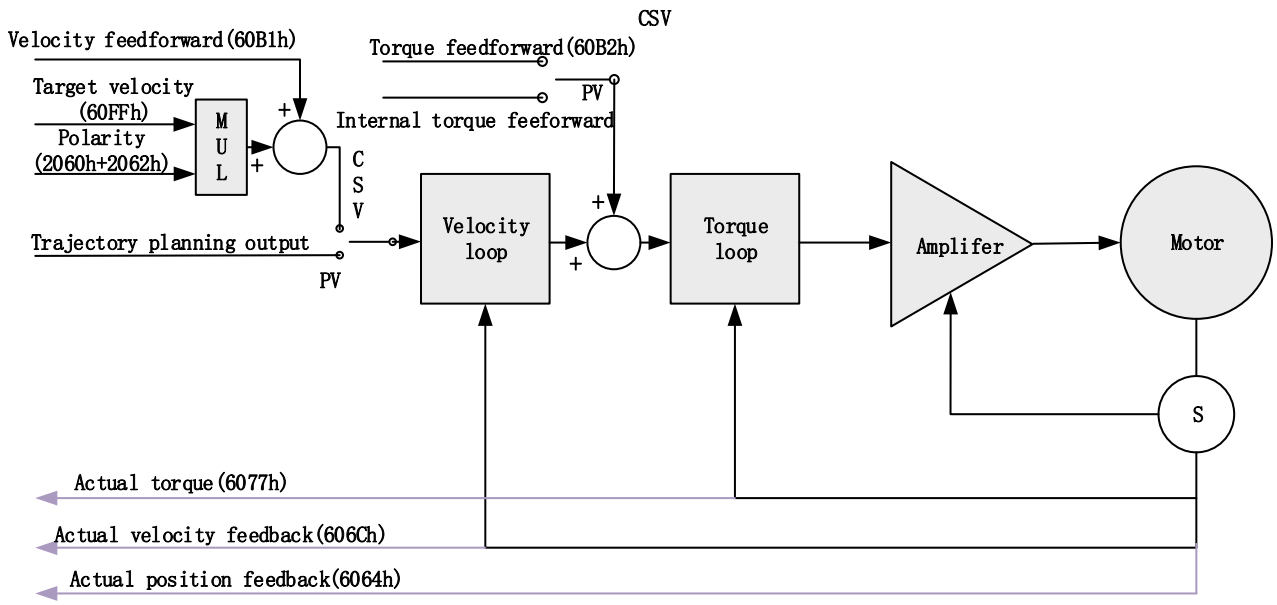


**Related Objects**

Basic object

| PDO | Index+Sub-Index | Name | Data Type | Access | Unit | Remarks |
|---|---|---|---|---|---|---|
| (RXPDO) | 6040-00h | Control word | U16 | RW | — | Required |
| | 60FF-00h | Target velocity | I32 | RW | Uint | Required |
| | 60B1-00h | Velocity feedforward | I32 | RW | Uint /S | Optional |
| | 60B2-00h | Torque feedforward | I16 | RW | 0.1% | Optional |
| (TXPDO) | 6041-00h | Status word | U16 | RO | — | Required |
| | 6064-00h | Actual position feedback | I32 | RO | Uint | Optional |
| | 606C-00h | Actual speed feedback | I32 | RO | Uint /S | Optional |

| | | | | | | |
|---|---|---|---|---|---|---|
| | 60F4-00h | Actual following error | I32 | RO | Uint | Optional |
| | 6077-00h | Actual torque | I16 | RO | 0.1% | Optional |

Extended object

| Index+Sub-Index | Name | Data Type | Access | Unit |
|---|---|---|---|---|
| 603F-00h | Error code | U16 | RO | — |
| 6060-00h | Operation mode | I8 | RW | — |
| 6061-00h | Displayed operation mode | I8 | RO | — |
| 606B-00h | Internal command velocity | I32 | RO | Uint |
| 605A-00h | Quick stop option | I16 | RW | — |
| 6085-00h | Quick stop deceleration | U32 | RW | Uint /S |

## 5.6.3 Profile Velocity Mode (PV)

In asynchronous motion mode, master device is only responsible for sending motion parameters and control commands.ELD3-EC servo drive will conduct trajectory planning according to the motion parameters sent by master device after receiving the motion start command from the master device. In asynchronous motion mode, the motion between each axes is asynchronous.

### PV Block Diagram

The difference between PV and CSV mode is that PV needs ELD3-EC to have the function of trajectory generator. The input and output structure of the trajectory generator is shown in figure 5.8

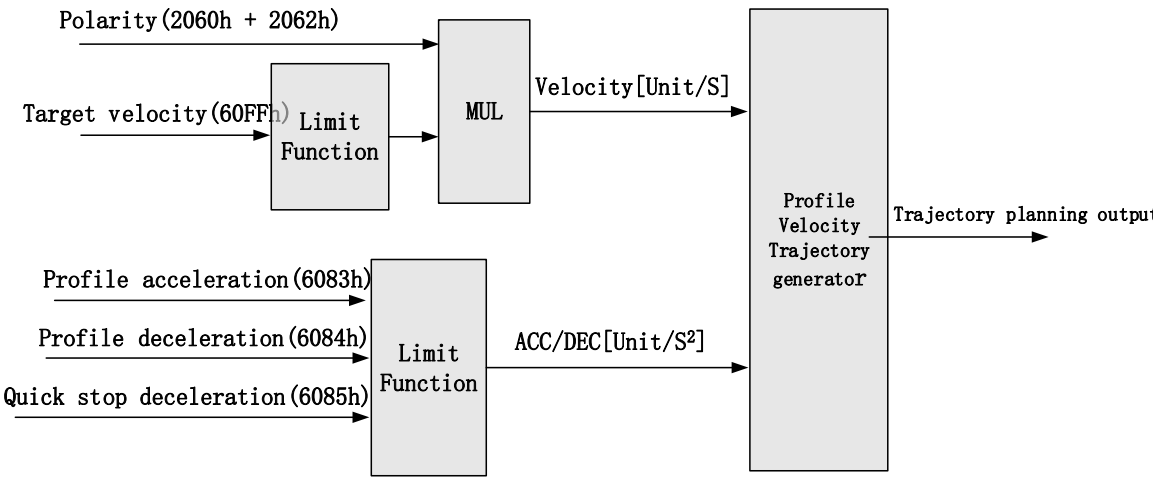

## Related Objects

Basic object

| PDO | Index+Sub-Index | Name | Data Type | Access | Unit | Notes |
|---|---|---|---|---|---|---|
| (RXPDO) | 6040-00h | Control word | U16 | RW | — | Required |
| | 60FF-00h | Target velocity | I32 | RW | Uint | Required |
| | 6083-00h | Acceleration | I32 | RW | Uint /S | Optional |
| (TXPDO) | 6041-00h | Status word | U16 | RO | — | Required |
| | 6064-00h | Position feedback | I32 | RO | Uint | Optional |
| | 606C-00h | Velocity feedback | I32 | RO | Uint /S | Optional |
| | 60F4-00h | Actual following error | I32 | RO | Uint | Optional |
| | 6077-00h | Actual torque | I16 | RO | 0.1% | Optional |

Extended object

| Index+Sub-Index | Name | Data Type | Access | Unit |
|---|---|---|---|---|
| 603F-00h | Error code | U16 | RO | — |
| 6060-00h | Operation mode | I8 | RW | — |
| 6061-00h | Displayed operation mode | I8 | RO | — |
| 605A-00h | Quick stop option | I16 | RW | — |
| 6084-00h | Deceleration | U32 | RW | Uint /S |
| 6085-00h | Quick stop deceleration | U32 | RW | Uint /S |

### Control Word and Status Word for Profile Velocity Mode

The bit6~4 of control words (6040h) associated with the control mode in PV mode are invalid. The motion in PV mode can be triggered as long as the motion parameters (target velocity (60FFh) ACC/DEC (6083h/6084h)) are given after the axis is enabled.

**Table7. Bit15~12、10、8 of Status word (6041h) for Profile Velocity Mode**

| Bit (Label) | Value | Details |
|---|---|---|
| 8 (Quick stop) | 0 | Quick stop invalid |
| | 1 | Quick stop valid |
| 10 (Velocity reached) | 0 | Velocity not yet reached |
| | 1 | Velocity reached |
| 12 (Zero speed) | 0 | It's not zero speed. It's moving. |
| | 1 | Zero speed or it's going to slow down to zero speed *1) |

*1) Zero speed of bit 12 is generally effective when deceleration stop and hardware limit valid.

Application: Realization of profile velocity motion

Step 1: 6060h = 3, determine if 6061h = 3. Servo driver is now under PV mode.

Step 2: Write motion parameters: Target velocity 60FFh, acceleration 6083h and deceleration 6084h.

## 5.7 Torque Mode（CST、PT）

### 5.7.1 Common Functions of Torque Mode

| Index | Sub Index | Label | Access | PDO | Mode | |
|---|---|---|---|---|---|---|
| | | | | | CST | PT |
| 6040 | 0 | Control word | RW | RxPDO | Yes | Yes |
| 6071 | 0 | Target torque | RW | RxPDO | Yes | Yes |
| 6072 | 0 | Max torque | RW | RxPDO | Yes | Yes |
| 6080 | 0 | Maximum motor speed | RW | RxPDO | Yes | Yes |
| 6087 | 0 | Torque change rate | RW | RxPDO | Yes | Yes |
| 60B2 | 0 | Torque feedforward | RW | RxPDO | Yes | Yes |

| Index | Sub Index | Label | Access | PDO | Mode | |
|---|---|---|---|---|---|---|
| | | | | | CST | PT |
| 6041 | 0 | Status word | RO | TxPDO | Yes | Yes |
| 6063 | 0 | Actual internal position | RO | TxPDO | Yes | Yes |
| 6064 | 0 | Actual feedback position | RO | TxPDO | Yes | Yes |
| 606C | 0 | Actual feedback velocity | RO | TxPDO | Yes | Yes |
| 6074 | 0 | Internal torque command | RO | TxPDO | Yes | Yes |
| 6075 | 0 | Rated current | RO | No | Yes | Yes |
| 6076 | 0 | Rated torque | RO | No | Yes | Yes |
| 6077 | 0 | Actual torque | RO | TxPDO | Yes | Yes |
| 6079 | 0 | Bus voltage | RO | TxPDO | Yes | Yes |

## 5.7.2 Cyclic Synchronous Torque Mode (CST)

### CST Block Diagram

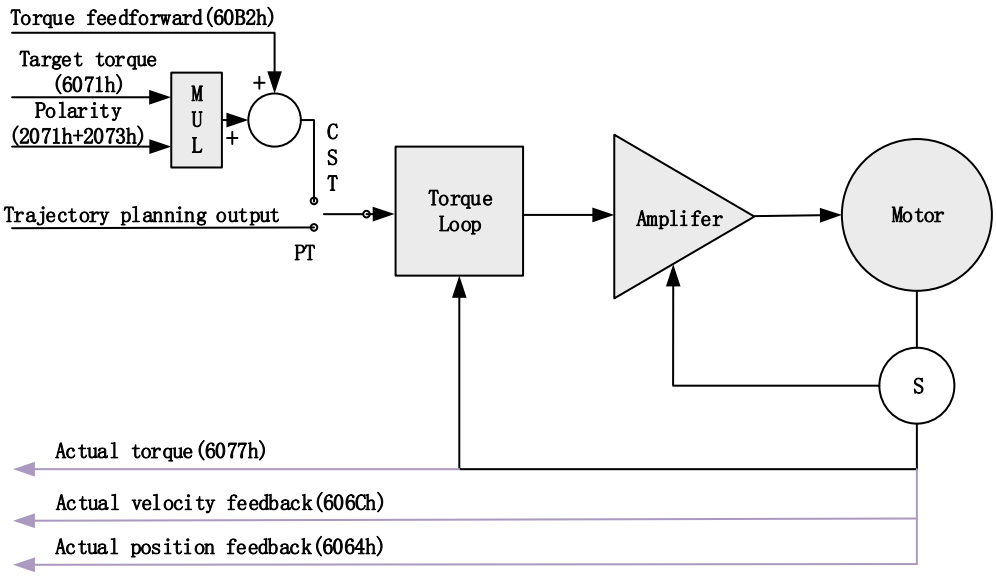


### Related Objects

Basic object

| PDO | Index+Sub-Index | Name | Data Type | Access | Unit | Remarks |
|---|---|---|---|---|---|---|
| (RXPDO) | 6040-00h | Control word | U16 | RW | — | Required |
| | 6071-00h | Target torque | I16 | RW | Uint | Required |
| | 6087-00h | Torque feed-forward | U32 | RW | 0.1%/S | Optional |
| (TXPDO) | 6041-00h | Status word | U16 | RO | — | Required |
| | 6064-00h | Actual position feedback | I32 | RO | Uint | Optional |
| | 606C-00h | Actual velocity feedback | I32 | RO | Uint /S | Optional |
| | 60F4-00h | Actual following error | I32 | RO | Uint | Optional |
| | 6077-00h | Actual torque | I16 | RO | 0.1% | Required |

Extended object

| Index+Sub-Index | Name | Data Type | Access | Unit |
|---|---|---|---|---|
| 603F-00h | Error code | U16 | RO | — |
| 6060-00h | Operation mode | I8 | RW | — |
| 6061-00h | Displayed operation mode | I8 | RO | — |
| 6074-00h | Internal command torque | I16 | RO | 0.1% |
| 605A-00h | Quick stop option | I16 | RW | — |
| 6080-00h | Maximum motor velocity | U32 | RW | Uint /S |

| | | | | |
|---|---|---|---|---|
| 6085-00h | Quick stop deceleration | U32 | RW | Uint /S |
| 60B1-00h | Velocity feedforward | I32 | RW | Uint /S |
| 2077-00h | Velocity limit | I16 | RW | RPM |

## 5.7.3 Profile Torque Mode (PT)

In asynchronous motion mode, master device is only responsible for sending motion parameters and control commands.EL7-EC servo drive will conduct trajectory planning according to the motion parameters sent by master device after receiving the motion start command from the master device. In asynchronous motion mode, the motion between each axes is asynchronous.

### PT Block Diagram

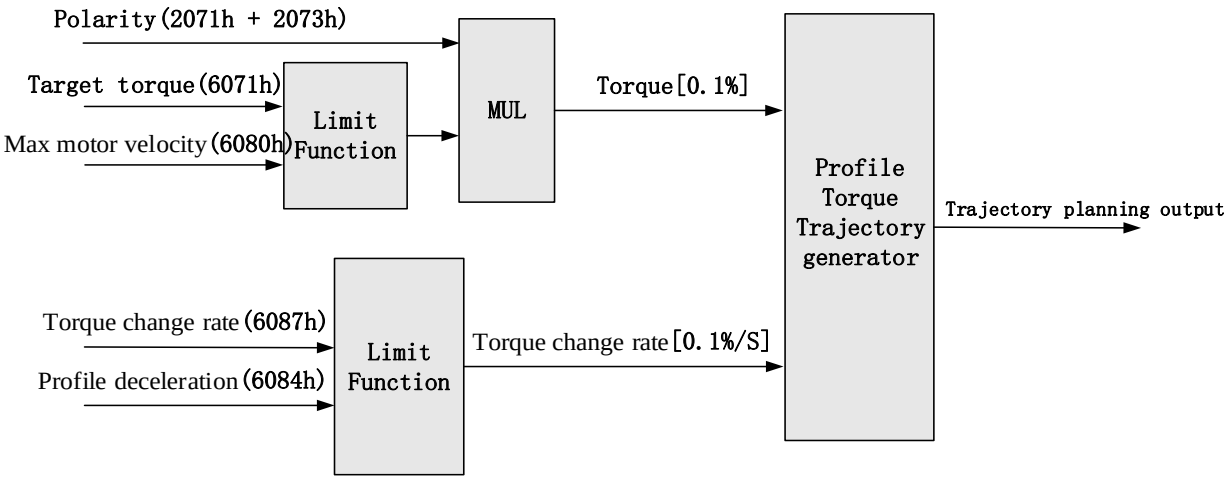


**Related Objects**

Basic object

| PDO | Index+Sub-Index | Label | Data Type | Access | Unit | Notes |
|---|---|---|---|---|---|---|
| (RXPDO) | 6040-00h | Control word | U16 | RW | — | Required |
| | 6071-00h | Target torque | I16 | RW | 0.1% | Required |
| | 6087-00h | Torque change rate | U32 | RW | 0.1%/S | Optional |
| (TXPDO) | 6041-00h | Status word | U16 | RO | — | Required |
| | 6064-00h | Actual feedback position value | I32 | RO | Uint | Optional |
| | 606C-00h | Actual feedback speed value | I32 | RO | Uint /S | Optional |
| | 60F4-00h | Actual following error | I32 | RO | Uint | Optional |
| | 6077-00h | Actual torque | I16 | RO | 0.1% | Optional |

Extended object

| Index+Sub-Index | Label | Data Type | Access | Unit |
|---|---|---|---|---|
| 603F-00h | Error code | U16 | RO | — |
| 6060-00h | Operation mode | I8 | RW | — |
| 6061-00h | Displayed operation mode | I8 | RO | — |
| 6074-00h | Internal command torque | I16 | RO | 0.1% |
| 6080-00h | Maximum motor velocity | U32 | RW | Uint /S |
| 605A-00h | Quick stop option | I16 | RW | — |
| 6085-00h | Quick stop deceleration | U32 | RW | Uint /S |
| 2077-00h | Velocity limit | I16 | RW | RPM |

Application: Realization of profile torque motion

Step 1: 6060h = 4, determine if 6061h = 4. Servo driver is now under PT mode.

Step 2: Write motion parameters: Target torque 6071h, Torque change rate 6087h, and Max. velocity limit 6080h

# Chapter 6 Application

## 6.1 Gain Adjustment

In order for servo driver to execute commands from master device without delay and to optimize machine performance, gain adjustment has to be done yet.

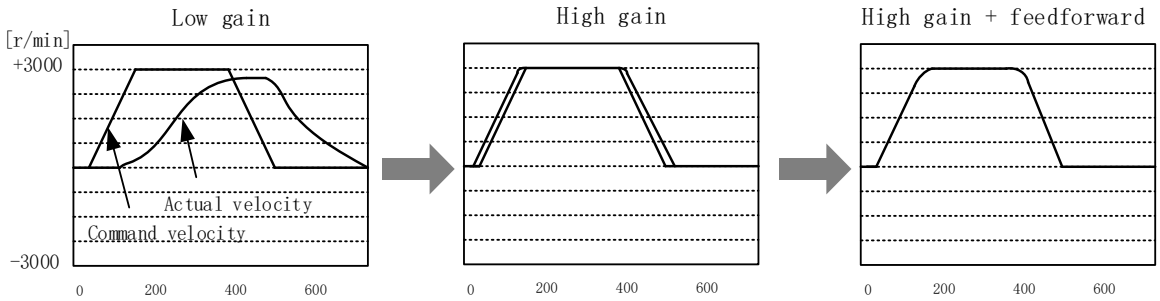


| | | |
|---|---|---|
| **Position loop gain**: 320 (0.1/s)<br>**Velocity loop gain**: 180 (0.1Hz)<br>**Velocity loop integral time constant**: 31ms | **Position loop gain**: 900 (0.1/s)<br>**Velocity loop gain**: 500 (0.1Hz)<br>**Velocity loop integral time constant**: 31ms | **Position loop gain**: 900 (0.1/s)<br>**Velocity loop gain**: 500 (0.1Hz)<br>**Velocity loop integral time constant**: 31ms |

Servo driver gain adjustment is done in combination with a few other parameters (Inertia ratio, Position loop gain, Velocity loop gain and Filters settings). These parameters will have an effect on each other so it always advisable to tune each parameter accordingly in order to achieve optimal machine performance. Please refer to the steps below

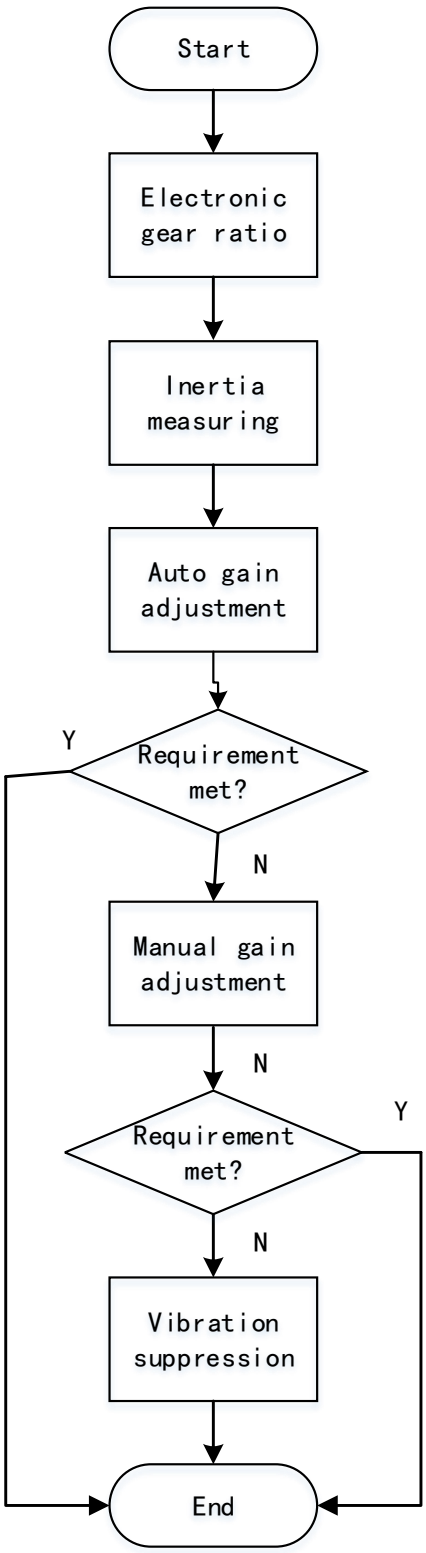


*Gain adjustment flow*

| Steps | Functions | Explanation |
|---|---|---|
| Inertia ratio identification | Online | Motor moves with command from controller, servo driver will automatically calculate load-inertia ratio |
| | Offline | Using servo driver inertia determining function, servo driver can automatically calculate load-inertia ratio |
| Auto gain adjustment | Auto gain adjustment | Real time determining of mechanical load, gain value is set accordingly.<br>1. One-click tuning (Can be realized using Motion Studio. Auto tuning of gain and inertia according to actual data)<br>2. Real time auto adjustment (Set by selecting mechanical stiffness level, related gain parameters will be automatically adjusted accordingly) |
| Manual gain adjustment | Basic gain | On top of auto gain adjustment, manually adjust related parameters so that machine can have better responsiveness and following |
| | Basic steps | 1. Gain related parameters tuning under position mode<br>2. Gain related parameters tuning under velocity mode<br>3. Gain related parameters tuning under torque mode |
| | Gain switching | Gain switching through internal data or external signal. Lower vibration at stop, shorten tuning time, improve command following. |
| | Model following control | Improve responsiveness, shorten positioning time (Only available in position mode) |
| | Command pulse filter | Set filter for position, velocity and torque command pulse. |
| | Gain feedforward | Enable feedforward function to improve following behavior |
| | Friction compensation | Reduce the effect of mechanical friction |
| | 3rd gain switching | Base on usual gain switching function. Can be set to switch gain at stopping and reduce positioning time. |
| Vibration suppression | Mechanical resonance | Using notch filtering function to suppress mechanical resonance. |
| | End vibration suppression | To suppress low frequency vibration of mechanical end |

## 6.2 Inertia ratio identification

Inertia ratio = Total mechanical load rotational inertia / Electronic gear rotational inertia

Inertia ratio is an important parameter. Setting a suitable value can help with the precise tuning of the servo system. Inertia ratio can be set manually and also be determined automatically through servo driver

### 6.2.1 Online inertia determination

Enable motor using controller. Let motor run at above 400rpm, make sure there are acceleration, constant velocity and deceleration phase during the whole run. Cycle through 2-3 times to calculate load-inertia ratio. Result can be found on the front panel d16 or through Motion Studio system monitoring page. Enter the calculated value into P00.04 and save.

#### Inertia measuring using Motion Studio

1. Start Motion Studio and maneuver to inertia measuring page under performance tuning. Set trial run velocity P06.04 and acc-/deceleration time P06.25, click on 'Upload' to upload parameters to servo driver.
2. Tick "Prohibit external enabling" and click on "servo on".
3. Click and hold "CCW" to start the motor. Current position will show motor cycles of revolution. Click on POS 1 to save current position as starting point. Click and hold "CW" to start the motor again. Click on POS 2 to save current position as ending point.
4. Set the waiting time between each cycle in P06.21 and no. of cycles in P06.22. Click on 'Run' and motor will run according to the parameters set.
5. After the calculation is done, inertia ratio will be calculated automatically and click on 'write' to enter the calculated value into P00.04.
6. Click on " " to enter parameters management to check or modify P00.04. Then, click on " " to save parameters to driver.

*Please take note:*

1. *Trial run velocity and distance should be optimal to prevent any axis from bumping into objects.*
2. *It is recommended to move only in 1 direction for vertically mounted axis. Take precaution before moving the axis.*
3. *For applications with higher frictional drag, please set a minimal travel distance.*

| | | | | | | |
|---|---|---|---|---|---|---|
| **P00.04** | **Label** | Inertia ratio | **Mode** | **F** | | |
| | **Range** | 0~20000 | **Default** | 250 | **Unit** | % |
| | **Activation** | Immediate | | | **Index** | 2004h |

**P00.04=( load inertia/motor rotational inertia)×100%**

Set inertia ratio according to actual load inertia. When both are uniform, actual motor velocity loop responsiveness and gain settings will be consistent. If inertia ratio is greater than actual value, velocity loop gain settings will be higher and vice versa.
For motor with high inertia, P00.04 can be left unfilled but optimal setting of P00.04 could improve system performance.

#### Common issues

| Error | Cause | Solution |
|---|---|---|
| Inertia ratio identification failure | Loose load connection | Check for mechanical failure |
| | Measuring distance is too short | Increase measuring distance |
| | Belt load | Please pre-set an inertia ratio when using a belt to prevent jolt due to low inertia. |

# 6.3 Easy Tuning

## 6.3.1 Single Parameter Tuning

Set a mechanical stiffness level and the driver will automatically tune the parameters accordingly, including inertia measuring and vibration suppression to fulfill responsiveness and stability needs. At same time, more advanced functions can be applied, for example: Command pulse filter, low frequency vibration suppression, etc.
Recommended for applications where inertia changes is minute. Single parameter tuning is more complicated to set up compared to one-click tuning. Use single parameter tuning when one-click tuning doesn't fulfill the needs.

| | Recommended application scenarios |
|---|---|
| Control mode | Suitable in position mode or EtherCAT mode (Not applicable in other modes) |
| Others | ➢ Servo ON (SRV-ON) status<br>➢ Set suitable position/torque limit so that motor can run normally<br>➢ Use trial run or any external controller to make sure no clash of axes |

| | Factors affecting single parameter tuning |
|---|---|
| Load inertia | ➢ External load smaller or 30 times larger than rotor inertia<br>➢ Inertia measuring might fail upon changes in load inertia<br>➢ Load torque changes drastically |
| Load | ➢ Mechanical stiffness is too low<br>➢ Existence of gear backlash or any other non-linear factors<br>➢ Complicated mechanical load structure |
| Motion | ➢ Low speed, no more than 300[r/min].<br>➢ Acceleration/deceleration time too long, more than = 600ms<br>➢ Speed > 300r/min, acceleration/deceleration time < 600ms but travelling time duration < 50ms. |

### 6.3.2 One-click Tuning

This function is able to automatically tune the most optimal gain parameters for the specific applications after the axis is in operation and learning. Corresponding paths and responsiveness level need to be set before using this function. Please refer to the flow chart below. Parameter will be saved to parameters file and can be used on similar axes.
Recommended for applications where inertia changes is minute.

| | Recommended application scenarios |
|---|---|
| Control mode | Suitable in position mode or EtherCAT mode (Not applicable in other modes) |
| Others | ➢ Make sure servo drive can't be enabled externally or any external command that can rotate the motor. Set range of movement, velocity and acceleration/deceleration time for one-click tuning.<br>➢ Prohibit external command. Make sure there is no obstacle within the range of movement of the axis and motor can rotate freely. |

| | Factors affecting one-click tuning |
|---|---|
| Load inertia | ➢ External load smaller or 30 times larger than rotor inertia<br>➢ Drastic changes in load inertia during motion.<br>*Under heavy load (more than 30 times inertia), please make sure of safety* |
| Load | ➢ Mechanical load is loosely connected.<br>➢ Existence of gear backlash or any other non-linear factors<br>➢ Complicated mechanical load structure |
| Motion | ➢ Range of movement is too short or too long which cost the time to be overdue.<br>➢ Not smaller than 0.5R |

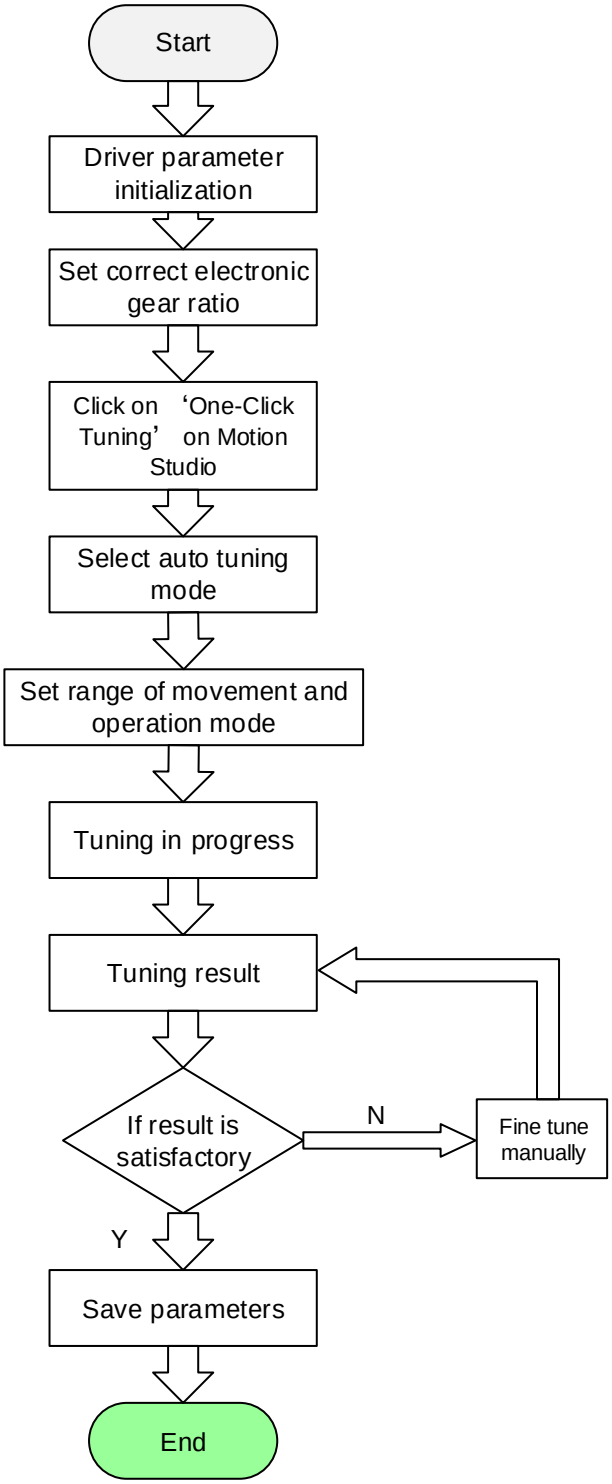


*One-click Tuning flow chart*

## 6.4 Auto gain adjustment

This function will measure real time mechanical properties and set gain values in accordance to mechanical stiffness. Can be used in any control mode

| Conditions to implement | |
|---|---|
| Control mode | Please refer to P00.02 for detailed explanations. Auto gain adjustment is different for each control mode. |
| Other | ・Servo driver needs to be enabled<br>・Set up input signals such as deviation counter clearing and command input; Torque limit and other motion control parameters to enable motor to move normally without obstacles. |

Under certain conditions, external factors might affect automatic gain adjustment functions. If the conditions as listed exist or unfavorable, please disable the automatic gain adjustment function.

| Affecting conditions | |
|---|---|
| Load inertia | ・If inertia is less than 3 times or over 20 times of rotor inertia.<br>・Changes in load inertia |
| Load | ・Very low mechanical stiffness<br>・If gear backlash is a non-linear property |
| Motion | ・Velocity less than 100r/min or continuously in low velocity mode<br>・Acc-/deceleration to 2000r/min within 1s. 。<br>・Acc-/deceleration torque lower than eccentric load, frictional torque.<br>・Velocity < 100r/min, acc-/deceleration to 2000r/min within 1s but not longer than 50ms |

To enable automatic gain adjustment:

1. Disable the servo driver.
2. Set P00.02 = 0x01/0x11 or 0x02/0x12. Then, set P00.03
3. Servo enabled. Run motion as normal to start measuring load properties.

Related parameters will be automatically set.

4. Increase motor responsiveness by increasing P00.03. Please check if there is any vibration before setting P00.03 to max. value.
5. Save the parameters.

*Please take note:*

*- Please stop the motor before modifying any parameter. P00.02 only takes effect after saving modified parameter values into EEPROM and restarting the driver.*

*- After enabling the servo driver for the first time or when increasing P00.03, mechanical noise or vibration might occur for the first run, it is normal. If it persists, please set P00.03 to lower value.*

## Parameters that change in accordance to real time gain adjustment

| No. | Parameters | Label | Remarks |
|---|---|---|---|
| 1 | P01.00 | 1st position loop gain | When stiffness setting is valid, parameters will be updated to match stiffness value |
| 2 | P01.01 | 1st velocity loop gain | |
| 3 | P01.02 | 1st velocity integral time constant | |
| 4 | P01.03 | 1st velocity detection filter | |
| 5 | P01.04 | 1st torque filter | |
| 6 | P01.05 | 2nd position loop gain | |
| 7 | P01.06 | 2nd velocity loop gain | |
| 8 | P01.07 | 2nd velocity integral time constant | |
| 9 | P01.08 | 2nd velocity detection filter | |
| 10 | P01.09 | 2nd torque filter | |

If auto gain adjustment is valid, the parameters listed above can't be manually modified. Only when P00.02 = 0x00 or 0x10, can the gain related parameters be modified manually.

## Gain related parameters that don't change with the real time gain adjustment

| No. | Parameter | Label |
|---|---|---|
| 1 | P01.10 | Velocity feedforward gain constant |
| 2 | P01.11 | Velocity feedforward filter time constant |
| 3 | P01.12 | Torque feedforward gain |
| 4 | P01.13 | Torque feedforward filter time constant |
| 5 | P01.15 | Position control gain switching mode |
| 6 | P01.17 | Position control switching level |
| 7 | P01.18 | Position control switching hysteresis |
| 18 | P01.19 | Position gain switching time |

## Types of mechanical load

Please select mechanical load according to load-inertia ratio and mechanical structures:

| Load types | Description |
|---|---|
| **0x00_** : Rigid structure | When load is **rigid** with relatively **low inertia**. Gain adjustments prioritize **system responsiveness**. Structures including high precision reducer, lead screws, mechanical gears, etc. |
| **0x01_** : High inertia | **High load inertia** (10 times or above). Gain adjustments prioritize **operation stability and responsiveness**. Recommended mechanical stiffness level **not more than 15**. |
| **0x02_** : Flexible structure | When load is **flexible** with relatively **high inertia**. Gain adjustments prioritize **operation stability**. Structures including long transportation belt or chain. |

*Structures with high inertia can have better performance if inertia ratio is set accurately.*

| P00.02 | Label | Real time Auto Gain Adjusting | Mode | F | | |
|---|---|---|---|---|---|---|
| | Range | 0x0~0xFFF | Default | 0x001 | Unit | — |
| | Activation | Immediate | | | Index | 2002h |

Set up the mode of the real time auto gain adjusting.

| Data bits | Category | Settings | Application |
|---|---|---|---|
| 0x00_ | Motion setting mode | Used to set motion setting mode, which can be selected according to the motion characteristics or setting requirements. Generally, it is recommended to select mode 1 with good generality when there is no special requirement, mode 2 when rapid positioning is needed If mode 1 and mode 2 cannot meet the requirements, please choose mode 0. | |
| | | 0:Manual | P00.03 invalid. Gain value must be adjusted manually and accordingly. |
| | | 1:Standard | P00.03 valid. Quick gain adjusting can be achieved by changing P00.03 stiffness value. Gain switching is not used in this mode, suitable for applications with requirements for stability. |
| | | 2:Positioning | P00.03 valid. Quick gain adjusting can be achieved by changing P00.03 stiffness value. This mode is suitable for applications requiring quick positioning. Not recommended for load mounted vertical to ground, or please compensate for the load using P06.07 |
| 0x0_0 | Load type setting | Used to select the load type, choose according to load-inertia ratio and mechanical structure. | |
| | | 0: Rigid structure | This mode prioritizes system responsiveness. Use this mode when there is a relatively rigid structure with low load inertia. Typical application including directly connected high-precision gearbox, lead screw, gears, etc. |
| | | 1:High inertia | For applications with higher load inertia (10 times or above), gain settings take into account both machine stability and responsiveness. Not recommended to set stiffness above 15 for high load inertia. |
| | | 2: Flexible structure | This mode prioritizes system stability. Use this mode when there is low rigidity structure with high load inertia. Typical applications included belts and chains. |
| 0x_00 | *Reserved* | | |

The setting type combination is a hexadecimal standard, as follows:

| Setting type combination | Application type |
|---|---|
| 0X000 | Rigid structure + Manual |
| 0X001 | Rigid structure +Standard |
| 0X002 | Rigid structure +Positioning |
| 0X010 | High inertia + Manual |
| 0X011 | High inertia + Standard |
| 0X012 | High inertia + Positioning |
| 0X020 | Flexible structure + Manual |
| 0X021 | Flexible structure +Standard |
| 0X022 | Flexible structure +Positioning |

| P00.03 | Label | Real time auto stiffness adjusting | Mode | F | | |
|---|---|---|---|---|---|---|
| | Range | 50 ~ 81 | Default | 70 | Unit | — |
| | Activation | Immediate | | | Index | 2003h |

Valid when P00.03 = 1,2

Low ⟶ Mechanical stiffness ⟵ High

Low ⟶ Servo gain ⟵ High

81.80·····70.69.68·····51.50

Low ⟶ Responsiveness ⟵ High

- Lower values ensure better system responsiveness and mechanical stiffness but machine vibration might occur, please set accordingly. Please stop the motor before doing any changes to the stiffness settings.
- When P00.02 = 0x010, please set stiffness level to around 65.

## Gain parameters settings table

| Stiffness | 1st gain | | | | 2nd gain | | | |
|---|---|---|---|---|---|---|---|---|
| | P01.00 | P01.01 | P01.02 | P01.04 | P01.05 | P01.06 | P01.07 | P01.09 |
| | Position loop gain (0.1/s) | Velocity loop gain (Hz) | Velocity loop integral time constant（0.1ms） | Torque filter (0.01ms) | Position loop gain (0.1/s) | Velocity loop gain (Hz) | Velocity loop integral time constant（0.1ms） | Torque filter (0.01ms) |
| 81 | 20 | 15 | 3700 | 1500 | 25 | 15 | 10000 | 1500 |
| 80 | 25 | 20 | 2800 | 1100 | 30 | 20 | 10000 | 1100 |
| 79 | 30 | 25 | 2200 | 900 | 40 | 25 | 10000 | 900 |
| 78 | 40 | 30 | 1900 | 800 | 45 | 30 | 10000 | 800 |
| 77 | 45 | 35 | 1600 | 600 | 55 | 35 | 10000 | 600 |
| 76 | 55 | 45 | 1200 | 500 | 70 | 45 | 10000 | 500 |
| 75 | 75 | 60 | 900 | 400 | 95 | 60 | 10000 | 400 |
| 74 | 95 | 75 | 700 | 300 | 120 | 75 | 10000 | 300 |
| 73 | 115 | 90 | 600 | 300 | 140 | 90 | 10000 | 300 |
| 72 | 140 | 110 | 500 | 200 | 175 | 110 | 10000 | 200 |
| 71 | 175 | 140 | 400 | 200 | 220 | 140 | 10000 | 200 |
| 70 | 320 | 180 | 310 | 126 | 380 | 180 | 10000 | 126 |
| 69 | 390 | 220 | 250 | 103 | 460 | 220 | 10000 | 103 |
| 68 | 480 | 270 | 210 | 84 | 570 | 270 | 10000 | 84 |
| 67 | 630 | 350 | 160 | 65 | 730 | 350 | 10000 | 65 |
| 66 | 720 | 400 | 140 | 57 | 840 | 400 | 10000 | 57 |

| | | | | | | | | |
|---|---|---|---|---|---|---|---|---|
| 65 | 900 | 500 | 120 | 45 | 1050 | 500 | 10000 | 45 |
| 64 | 1080 | 600 | 110 | 38 | 1260 | 600 | 10000 | 38 |
| 63 | 1350 | 750 | 90 | 30 | 1570 | 750 | 10000 | 30 |
| 62 | 1620 | 900 | 80 | 25 | 1880 | 900 | 10000 | 25 |
| 61 | 2060 | 1150 | 70 | 20 | 2410 | 1150 | 10000 | 20 |
| 60 | 2510 | 1400 | 60 | 16 | 2930 | 1400 | 10000 | 16 |
| 59 | 3050 | 1700 | 50 | 13 | 3560 | 1700 | 10000 | 13 |
| 58 | 3770 | 2100 | 40 | 11 | 4400 | 2100 | 10000 | 11 |
| 57 | 4490 | 2500 | 40 | 9 | 5240 | 2500 | 10000 | 9 |
| 56 | 5000 | 2800 | 35 | 8 | 5900 | 2800 | 10000 | 8 |
| 55 | 5600 | 3100 | 30 | 7 | 6500 | 3100 | 10000 | 7 |
| 54 | 6100 | 3400 | 30 | 7 | 7100 | 3400 | 10000 | 7 |
| 53 | 6600 | 3700 | 25 | 6 | 7700 | 3700 | 10000 | 6 |
| 52 | 7200 | 4000 | 25 | 6 | 8400 | 4000 | 10000 | 6 |
| 51 | 8100 | 4500 | 20 | 5 | 9400 | 4500 | 10000 | 5 |
| 50 | 9000 | 5000 | 20 | 5 | 10500 | 5000 | 10000 | 5 |

## 6.5 Manual gain adjustment

Due to limitation of load conditions, automatic gain adjustment might not achieve expected performance. Control can be improved through manual gain adjustment
The servo system is made up of 3 control loops. From outer to inner: position loop, velocity loop, current loop as shown in the diagram below.

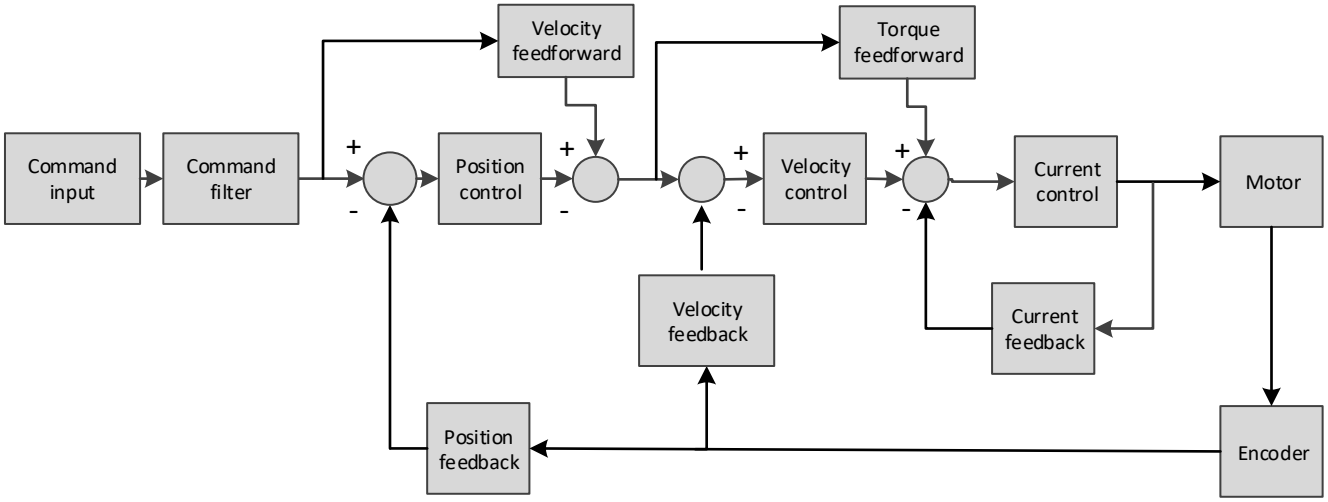


Inner control loop demands higher responsiveness. In order to avoid system instability, please tune in accordance to this principle. Current loop gain usually satisfies the responsiveness demand without tuning. When gain adjustment is done under position control mode, in order to keep the system stabile, position and velocity loop gain have to be increased at the same time to make sure the responsiveness of the position loop is lower than velocity loop.

### Steps to tuning (Position and velocity control)

For servo gain, if any one of the parameters is changed, please modify other gain related parameters accordingly. Make sure to the change at around 5% and follow the rules as below.

1) Increase responsiveness
   a) Reduce torque command filter time
   b) Increase velocity loop gain
   c) Decrease velocity loop integral time
   d) Increase position loop gain
2) Decrease responsiveness, prevent vibration and over shoot
   a) Reduce position loop gain
   b) Increase velocity loop integral time
   c) Reduce velocity loop gain
   d) Increase torque filter time

| P01.00 | Label | 1st position loop gain | Mode | PP | HM | CSP |
|---|---|---|---|---|---|---|
| | Range | 0~30000 | Default | 320 | Unit | 0.1/s |
| | Activation | Immediate | | | Index | 2100h |

Higher position loop gain value improves the responsiveness of the servo driver and lessens the positioning time.
Position loop gain value shouldn't exceed responsiveness of the mechanical system and take in consideration velocity loop gain, if not it might cause vibration, mechanical noise and overtravel.
As velocity loop gain is based on position loop gain, please set both values accordingly.
Recommended range: 1.2⩽P01.00/P01.01⩽1.8

| P01.02 | Label | 1st Integral Time Constant of Velocity Loop | Mode | F | | |
|---|---|---|---|---|---|---|
| | Range | 1~10000 | Default | 310 | Unit | 0.1ms |
| | Activation | Immediate | | | Index | 2102h |

If auto gain adjusting function is not enabled, P01.02 is activated.
The lower the set value, the closer the lag error at stop to 0 but might cause vibration. If the value set is overly large, overshoot, delay of positioning time duration and lowered responsiveness might occur.
Set 10000 to deactivate P01.02.
Recommended range: 50000≤P01.01xP01.02≤150000
For example: Velocity loop gain P01.01=500(0.1Hz), which is 50Hz. Integral time constant of velocity loop should be 100(0.1ms)≤P01.02≤300(0.1ms)

| P01.04 | Label | 1st Torque Filter Time Constant | Mode | F | | |
|---|---|---|---|---|---|---|
| | Range | 0~2500 | Default | 126 | Unit | 0.01ms |
| | Activation | Immediate | | | Index | 2104h |

To set torque command low-pass filter, add a filter delay time constant to torque command and filter out the high frequencies in the command.
Often used to reduce or eliminate some noise or vibration during motor operation, but it will reduce the responsiveness of current loop, resulting in undermining velocity loop and position loop control. P01.04 needs to match velocity loop gain.
Recommended range: 1,000,000/(2π×P01.04) ≥P01.01×4

For example: Velocity loop gain P01.01=180(0.1Hz) which is 18Hz. Time constant of torque filter should be P01.01≤221(0.01ms)
If mechanical vibration is due to servo driver, adjusting P01.04 might eliminate the vibration.
The smaller the value, the better the responsiveness but also subjected to machine conditions. If the value is too large, it might lower the responsiveness of current loop.
With higher P01.01 value settings and no resonance, reduce P01.04 value;
With lower P01.01 value settings, increase P01.04 value to lower motor noise.

## 6.6 Parameters adjustment under different control modes

Under different control mode, parameters adjustment has to be adjusted in this order: “Inertia measuring” -> “Auto gain adjustment”->” Manual gain adjustments”

### Position control mode

Set load-inertia ratio P00.04 after inertia determination.

| No. | Parameter | Label |
|---|---|---|
| 1 | P01.00 | 1st position loop gain |
| 2 | P01.01 | 1st velocity loop gain |
| 3 | P01.02 | 1st velocity integral time constant |
| 4 | P01.03 | 1st velocity detection filter |
| 5 | P01.04 | 1st torque filter time constant |
| 6 | P01.05 | 2nd position loop gain |
| 7 | P01.06 | 2nd velocity loop gain |
| 8 | P01.07 | 2nd velocity integral time constant |
| 9 | P01.08 | 2nd velocity detection filter |
| 10 | P01.09 | 2nd torque filter time constant |
| 11 | P01.10 | Velocity feedforward gain constant |
| 12 | P01.11 | Velocity feedforward filter time constant |
| 13 | P01.12 | Torque feedforward gain |
| 14 | P01.13 | Torque feedforward filter time constant |
| 15 | P01.15 | Position control gain switching mode |
| 16 | P01.17 | Position control switching level |
| 17 | P01.18 | Position control switching hysteresis |
| 18 | P01.19 | Position gain switching time |

1st and 2nd gain initial values are obtained by automatic gain adjustment

| No. | Parameter | Label |
|---|---|---|
| 1 | P01.00 | 1st position loop gain |
| 2 | P01.01 | 1st velocity loop gain |
| 3 | P01.02 | 1st velocity integral time constant |
| 4 | P01.03 | 1st velocity detection filter |
| 5 | P01.04 | 1st torque filter time constant |
| 6 | P01.05 | 2nd position loop gain |
| 7 | P01.06 | 2nd velocity loop gain |
| 8 | P01.07 | 2nd velocity integral time constant |
| 9 | P01.08 | 2nd velocity detection filter |
| 10 | P01.09 | 2nd torque filter time constant |

Manually adjusted gain parameters

| No. | Parameter | Label |
|---|---|---|
| 1 | P01.00 | 1st position loop gain |
| 2 | P01.01 | 1st velocity loop gain |
| 3 | P01.02 | 1st velocity integral time constant |
| 4 | P01.04 | 1st torque filter time constant |
| 5 | P01.10 | Velocity feedforward gain constant |
| 6 | P01.11 | Velocity feedforward filter time constant |

### Velocity control mode

Velocity control mode parameters adjustment is pretty similar to position control mode. Except for position loop gain P01.00 and P01.05, velocity feedforward gain (P01.10)

### Torque control mode

Parameters adjustment for torque control mode has to be differentiate into 2 conditions:

1. When actual velocity reaches velocity limit, adjustment will be as per velocity control mode. Motor will switch from torque control to velocity limit as velocity control.
2. When actual velocity doesn't reach velocity limit yet, Except for position loop gain, velocity loop gain and feedforward gain, parameter adjustments as per velocity control mode.

If there is no velocity limit and control is through torque command, please deactivate torque and notch filter, set velocity limit to max. value and increase velocity loop gain to as high as possible.

## 6.7 Gain switching

Gain switching function can be triggered internally in servo driver. Only valid under position or velocity control mode. Following effects can be realized by gain switching:

1. Switch to lower gain when motor stops to suppress vibration
2. Switch to higher gain when motor is moving at a low velocity to shorten positioning time
3. Switch to higher gain when motor is moving at a high velocity to improve command following behavior.

Diagram below shows gain switching when motor stops.

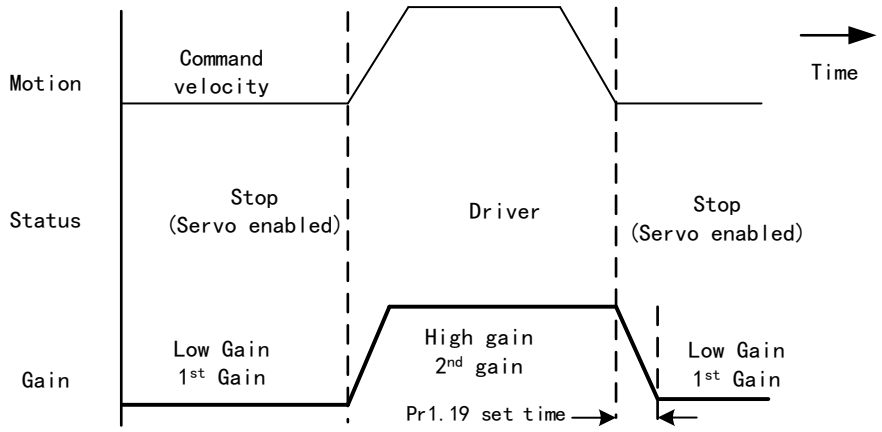


1st gain (P01.00-P01.04) and 2nd gain (P01.05-P01.09) switching can be realized through manual and positioning mode. Switching condition is set through P01.15. Gain switching is invalid under standard mode.

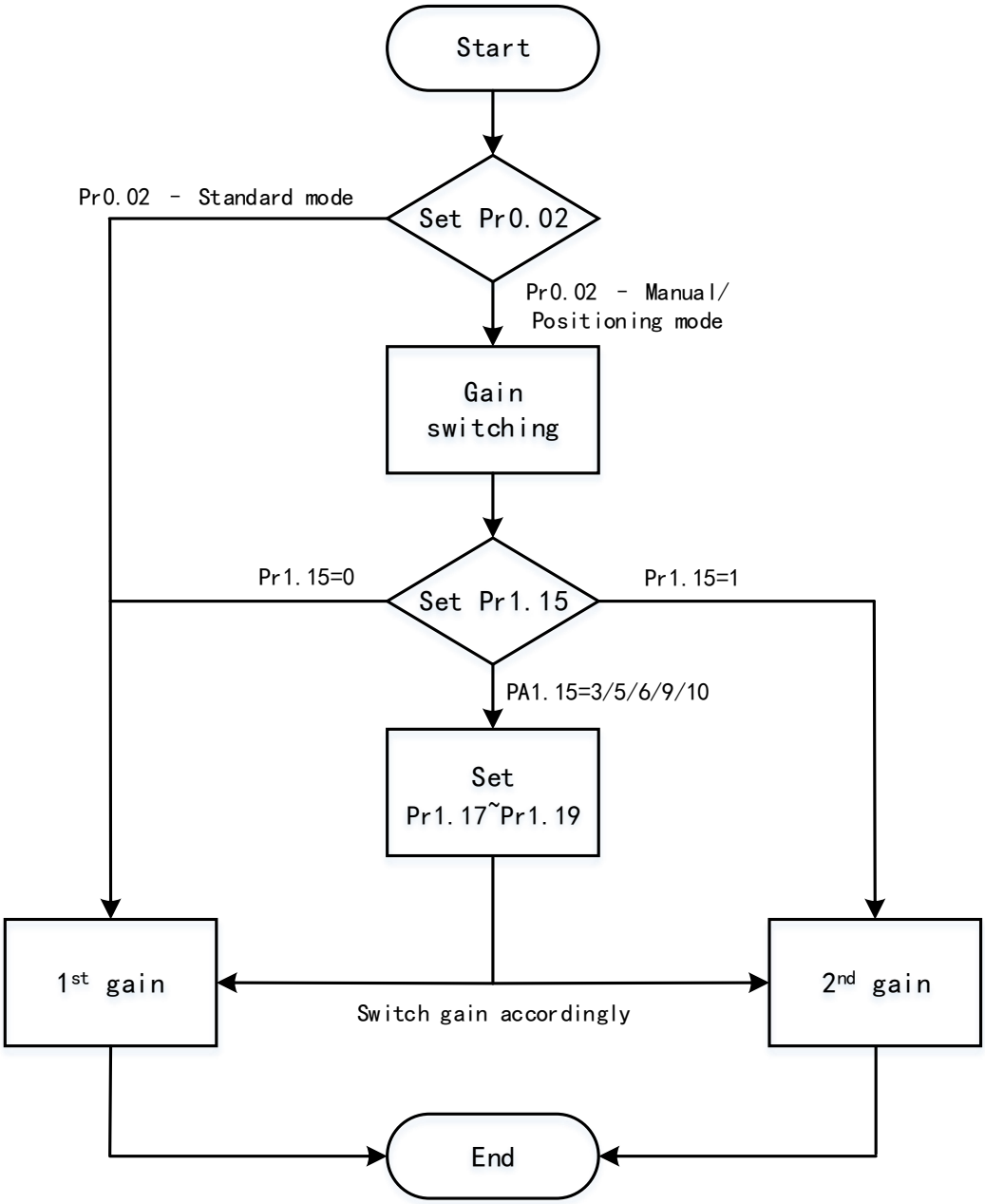


## Related parameters on gain switching

| No. | Parameter | Label | Remarks |
|---|---|---|---|
| 1 | P01.15 | Position control gain switching mode | In position control, set P01.15=3、5、6、9、10.<br>In velocity control, set P01.15=3、5、9 |
| 2 | P01.17 | Position control level switching | Please set P01.17≥P01.18 |
| 3 | P01.18 | Position control hysteresis switching | If P01.17 ＜ P01.18, driver will set P01.17＝P01.18 |
| 4 | P01.19 | Position gain time switching | |

| P01.15 | Label | Position control gain switching mode | Mode | F | | |
|---|---|---|---|---|---|---|
| | Range | 0~11 | Default | 0 | Unit | - |
| | Activation | Immediate | | | Index | 2115h |

| Set Value | Condition | Gain switching condition |
|---|---|---|
| 0 | 1st gain fixed | Fixed on using 1st gain(P01.00-P01.04) |
| 1 | 2nd gain fixed | Fixed on using 2nd gain (P01.05-P01.09) |
| 2 | Reserved | |
| 3 | High set torque | Switch to 2nd gain when set torque command absolute value larger than (level + hysteresis)[%]<br>Switch to 1st gain when set torque command absolute value smaller than (level + hysteresis)[%]<br> 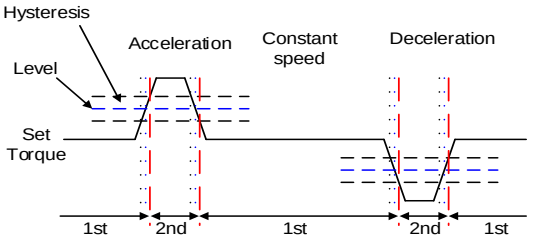 <br> |
| 4 | Reserved | Reserved |
| 5 | High set velocity | 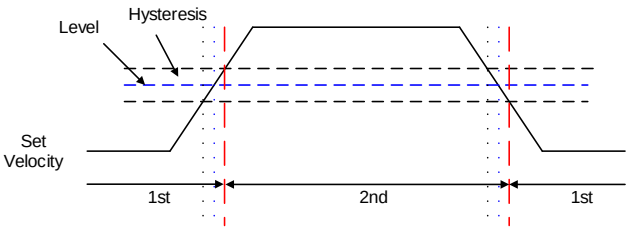 <br><br>Valid for position and velocity control.<br>Switch to 2nd gain when set velocity command absolute value larger than (level + hysteresis)[r/min]<br>Switch to 1st gain when set velocity command absolute value smaller than (level-hysteresis)[r/min] |
| 6 | Large position deviation | Valid for position control.<br>Switch to 2nd gain when position deviation absolute value larger than (level + hysteresis)[pulse]<br>Switch to 1st gain when position deviation absolute value smaller than (level-hysteresis)[pulse] |

| | | |
|---|---|---|
| | | 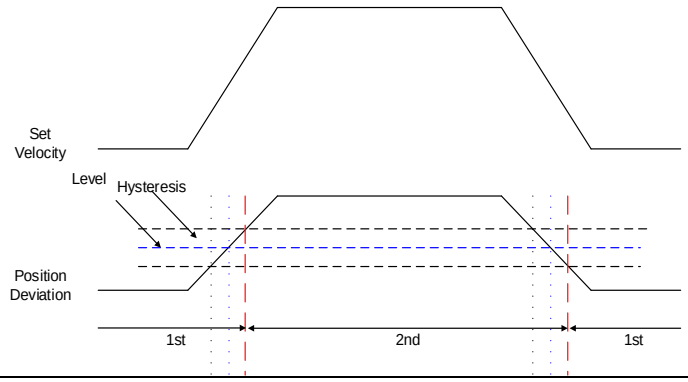 |
| 7 | Pending position command | Valid for position control.<br>Switch to 2nd gain if position command ≠ 0<br>Switch to 1st gain if position command remains = 0 throughout the duration of delay time.<br> 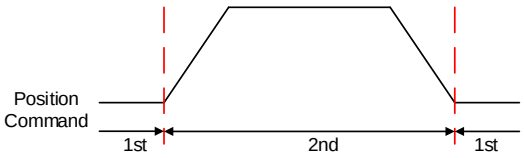 |
| 8 | Not yet in position | Valid for position control.<br>Switch to 2nd gain if position command is not completed.<br>Switch to 1st gain if position command remains uncompleted throughout the duration of delay time.<br> 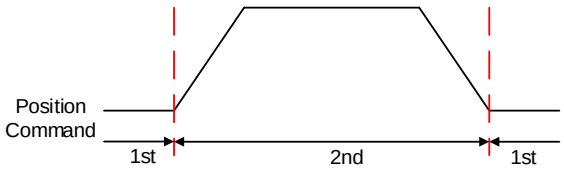 |
| 9 | High actual velocity | 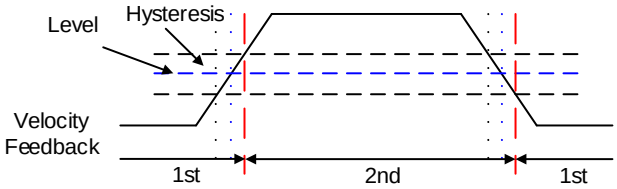 <br>Valid for position control.<br>Switch to 2nd gain when actual velocity absolute value larger than (level + hysteresis)[r/min]<br>Switch to 1st gain when actual velocity absolute value remains smaller throughout the duration of delay time than (level-hysteresis)[r/min] |
| 10 | Pending position command +actual velocity | Valid for position control.<br>Switch to 2nd gain if position command ≠ 0<br>Switch to 1st gain if positional command = 0 throughout the duration of delay time and absolute value of actual velocity remains smaller than (level - hysteresis) (r/min) |

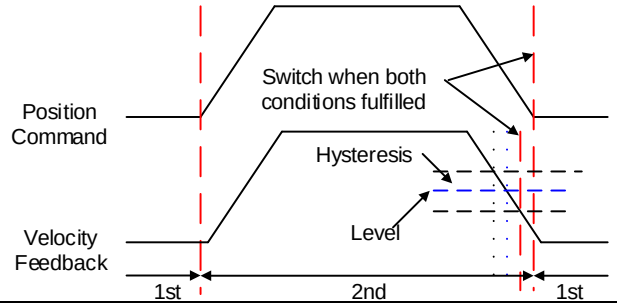


For position control mode, set P01.15=3,5,6,9,10;

For velocity control mode, set P01.15=3,5,9;

*** Above 'level' and 'hysteresis' are in correspondence to P01.17 Position control gain switching level and P01.18 Hysteresis at position control switching.*

| P01.17 | Label | Position control gain switching level | Mode | F | | |
|---|---|---|---|---|---|---|
| | Range | 0~20000 | Default | 50 | Unit | *As set* |
| | Activation | Immediate | | | Index | 2117h |

Set threshold value for gain switching to occur.
Unit is mode dependent.

| Switching condition | Unit |
|---|---|
| Position | Encoder pulse count |
| Velocity | RPM |
| Torque | % |

*Please set level ≥ hysteresis*

| P01.18 | Label | Hysteresis at position control switching | Mode | F | | |
|---|---|---|---|---|---|---|
| | Range | 0~20000 | Default | 33 | Unit | *As P01.17* |
| | Activation | Immediate | | | Index | 2118h |

To eliminate the instability of gain switching. Used in combination with P01.17 If level< hysteresis, drive will set internally hysteresis = level.

| P01.19 | Label | Position gain switching time | Mode | F | | |
|---|---|---|---|---|---|---|
| | Range | 0~10000 | Default | 33 | Unit | 0.1ms |
| | Activation | Immediate | | | Index | 2119h |

During position control, if 1st and 2nd gain difference is too large, to ease torque changes and vibration due to rapid changes in position loop gain, set suitable P01.19 value
For example: 1st (P01.00) <-> 2nd (P01.05)

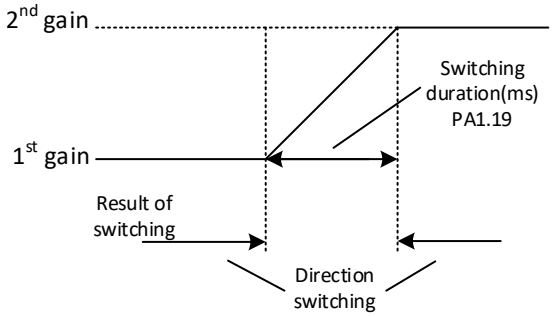


## 6.7 3rd Gain Switching

Besides switching between 1st and 2nd gain, a 3rd gain switching is added to set gain at the moment of stopping to reduce positioning time.
Only available under position mode and P06.05 ≠ 0, set P06.06 for 3rd gain value. When 2nd gain switches to 1st gain, it has to go through 3rd gain, switching time is set in P01.19.

Diagram below shows when P01.15 = 7.

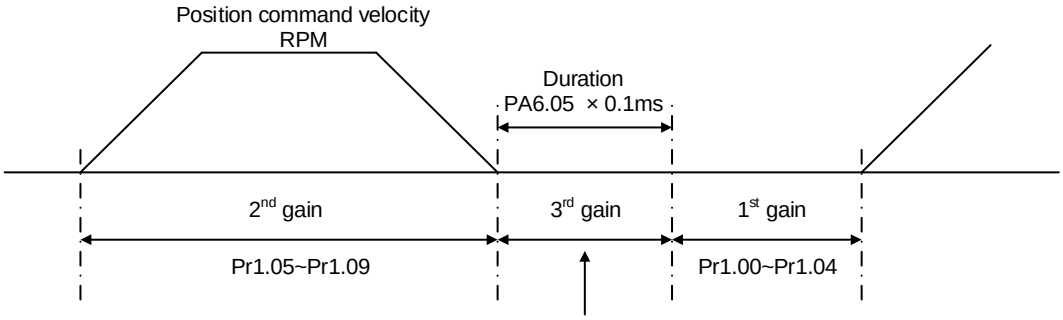


Position loop gain = Pr1.00 × Pr6.06/100
Velocity loop gain = Pr1.01 × Pr6.06/100
Velocity loop integral time constant, velocity detection filter, torque filter time constant will still be applied in 1st gain

**Related parameters**

| | | | | | | |
|---|---|---|---|---|---|---|
| **P06.05** | **Label** | Position 3rd gain valid time | **Mode** | **PP** | **HM** | **CSP** |
| | **Range** | 0~10000 | **Default** | 0 | **Unit** | 0.1ms |
| | **Activation** | Immediate | | | **Index** | 2605h |
| | To set time for 3rd gain to be valid<br>When not in use, set P06.05=0, P06.06=100 | | | | | |
| **P06.06** | **Label** | Position 3rd gain scale factor | **Mode** | **PP** | **HM** | **CSP** |
| | **Range** | 0~1000 | **Default** | 100 | **Unit** | 100% |
| | **Activation** | Immediate | | | **Index** | 2606h |

Set up the 3rd gain by multiplying factor of the 1st gain

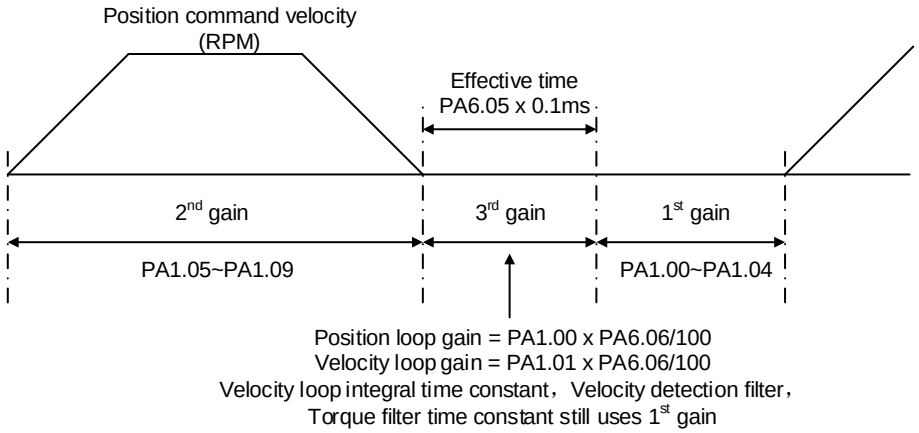


Above diagram is illustrated using P01.15 = 7.

3rd gain= 1st gain * P06.06/100

Only effective under position control mode. 3rd gain valid when P06.05 ≠ 0. Set 3rd gain value in P06.06. When 2nd gain switches to 1st gain, it will go through 3rd, switching time is set in P01.19.

## 6.8 Feedforward gain

In position control, velocity feedforward is calculated by comparing the velocity control command calculated internally and velocity command calculated from position feedback. Comparing to control only using feedbacks, this will reduce position deviation and increase responsiveness. Besides, by comparing the torque needed during motion from velocity control command in comparison with velocity feedback, torque feedback can be calculated to improve system responsiveness.

### 6.8.1 Velocity feedforward

Velocity feedforward can be used in position control mode. When the function is enabled, it can increase velocity responsiveness, reduce position deviation during constant velocity.

| | | | | | | |
|---|---|---|---|---|---|---|
| **P01.10** | **Label** | Velocity feed forward gain | **Mode** | **PP** | **HM** | **CSP** |
| | **Range** | 0~1000 | **Default** | 300 | **Unit** | 0.10% |

| | | | | |
|---|---|---|---|---|
| | **Activation** | Immediate | **Index** | 2110h |
| | Used for decreasing following error caused by low responsiveness of velocity loop. Might cause overshoot or increase in noise if set value is too high. | | | |

| | | | | | | |
|---|---|---|---|---|---|---|
| **P01.11** | **Label** | Velocity feed forward filter time constant | **Mode** | **PP** | **HM** | **CSP** |
| | **Range** | 0~6400 | **Default** | 50 | **Unit** | 0.01ms |
| | **Activation** | Immediate | | | **Index** | 2111h |
| | Set velocity feed forward low pass filter to eliminate high or abnormal frequencies in velocity feed forward command. Often used when position command with low resolution or high electronic gear ration to smoothen velocity feed forward.<br>Position deviation under constant velocity can be lowered with higher velocity feed forward gain. Please to refer to the equation below.<br>Position deviation[Uint]= $\frac{Set\ velocity[\frac{Uint}{s}]}{Position\ loop\ gain[Hz]}\ x\ \frac{100 - Velocity\ feed\ foward\ gain[\%]}{100}$ | | | | | |

## Velocity feedforward application

Set P01.11 to around 50 (0.5ms), then tune P01.10 from 0 to bigger values until the velocity feedforward achieves better performance. Under constant velocity, the position deviation in a motion will decrease as the velocity feedforward gain increase.

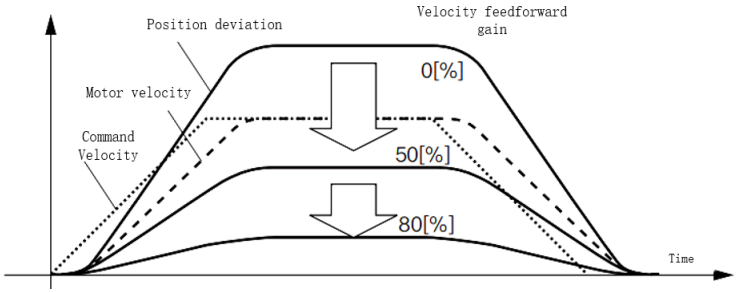


**Steps to tuning:**

1. Increase P01.10 to increase responsiveness but velocity overshoot might occur during acc-/deceleration.
2. By reducing P01.11, velocity feedforward would be more effective and vice versa. P01.10 and P01.11 need to be tuned to a balance.
3. If mechanical noise exists under normal working conditions, please increase P01.11 or use position command filter (1 time delay/ FIR smoothing filter)

## 6.8.2 Torque feedforward

Position control mode: Torque feedforward can increase the responsiveness of torque command, decrease position deviation during constant acc-/deceleration.
Velocity control mode: Torque feedforward can increase the responsiveness of torque command, decrease velocity deviation during constant velocity.

| | | | | | | | | |
|---|---|---|---|---|---|---|---|---|
| **P01.12** | **Label** | Torque feed forward gain | **Mode** | **PP** | **PV** | **HM** | **CSP** | **CSV** |
| | **Range** | 0~1000 | **Default** | 0 | | **Unit** | 0.1% | |
| | **Activation** | Immediate | | | | **Index** | 2112h | |

| | |
|---|---|
| | Before using torque feed forward, please set correct inertia ratio P00.04. By increasing torque feed forward gain, position deviation on constant acceleration/deceleration can be reduced to close to 0. Under ideal condition and trapezoidal speed profile, position deviation of the whole motion can be reduced to close to 0. In reality, perturbation torque will always exist, hence position deviation can never be 0. |

| P01.13 | Label | Torque feed forward filter time constant | Mode | PP | PV | HM | CSP | CSV |
|---|---|---|---|---|---|---|---|---|
| | Range | 0~6400 | Default | 0 | | Unit | 0.01ms | |
| | Activation | Immediate | | | | Index | 2113h | |
| | Low pass filter to eliminate abnormal or high frequencies in torque feed forward command. Usually used when encoder has lower resolution or precision.<br>Noise reduces if torque feed forward filter time constant is set higher but position deviation will increase at acceleration varied points. | | | | | | | |

## Torque feedforward application

Set P01.13 to around 50 (0.5ms), then tune P01.10 from 0 to bigger values until torque feedforward achieves better performance. Under constant acc-/deceleration, the position deviation in a motion will decrease as the velocity feedforward gain increase.

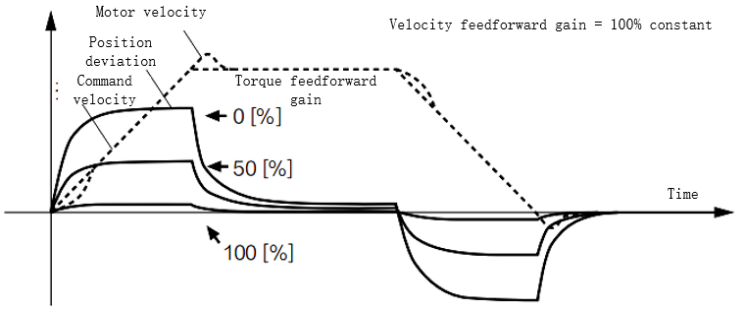


**Steps to tuning:**

2. Increase P01.12 to increase responsiveness but velocity overshoot might occur during acc-/deceleration.
3. By reducing P01.13, torque feedforward would be more effective and vice versa. P01.12 and P01.13 need to be tuned to a balance and reduce noise.

## 6.9 Model following control

Model following control is a type of closed loop control system. First, an ideal model is constructed and acts as a reference for actual model in a closed loop control. Model following control can be treated as a control mode with 2 flexibilities: Model reference can be used to improve command responsiveness and closed loop control used to increase responsiveness of the system towards interference. They don't affect each other.
Model following control can be used in position loop control to increase responsiveness to commands, reduce positioning time and following error. This function is only available in position control mode.

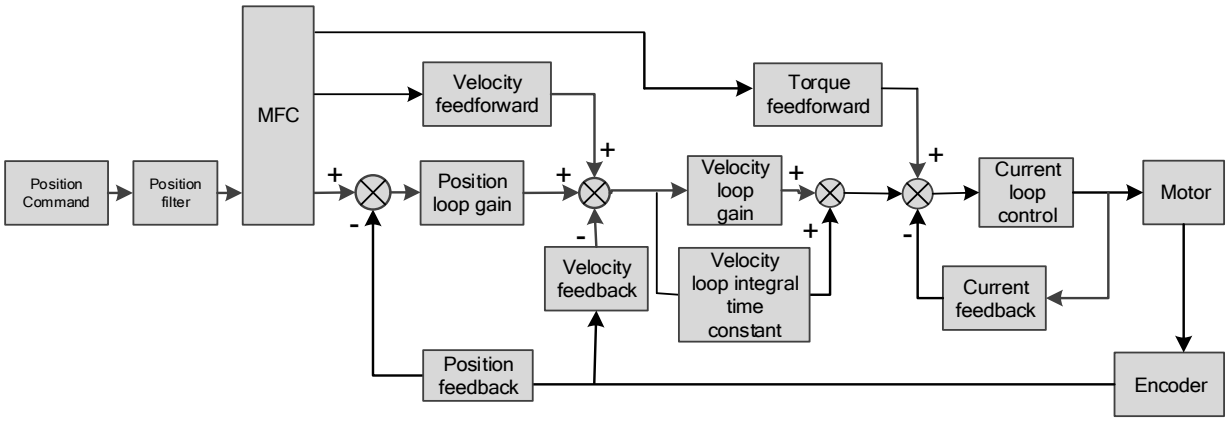


To adjust model following control

1. Automatic adjustment
   Set model following bandwidth P00.00 = 1 for automatic adjustment. Now, P00.00 = P01.01, model following bandwidth is adjusted automatically according to different velocity loop gain.
3. Manual adjustment
   Please used manual adjustment if
   - Automatic adjustment is not satisfactory.
   - Responsiveness needs further improvement in comparison with automatic adjustment.
   - There is a need to set servo gain or model following control parameters manually.

**Steps to manually adjust**

| Step | Content |
|---|---|
| 1 | Set up vibration suppression. |
| 2 | Set up the right inertia ratio. |
| 3 | Manually adjust gain. |
| 4 | Increase P00.00 provided that there is no overshoot and vibration. Usually P00.00 ≥ P01.01 is recommended. |

Model following bandwidth determines the responsiveness of the servo system. Increase the value set will increase responsiveness and reduce positioning time. Overshoot can be prevented if it is set at a lower value but responsiveness will be lowered. Model following bandwidth shouldn't be too large for mechanical structure with lower stiffness, excessive position deviation alarm might occur under high velocity.

## 6.10 Zero tracking control

Zero tracking control (ZTC) is able to realize a zero position deviation during acceleration/deceleration. This function increase multi axis precision and master-slave following.

Recommended application:

1. **Multi axis**

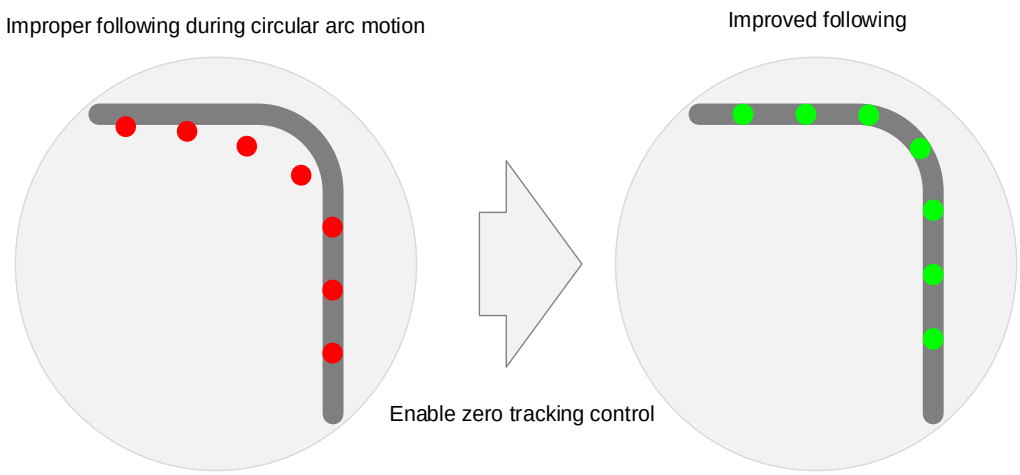


2. **Master-slave following**
   Used when driving axis sends frequency divider signal to lead following axis to improve the following control.

- *ZTC only available under position control mode.*
- *ZTC can only be enabled when P00.00 is valid.*
- *Model following control (MFC) and Zero Tracking Control (ZTC) cannot be used together at the same time.*

Zero tracking control can achieve better performance with the following limiting factors.

| | Limiting factors |
|---|---|
| Electronic gear ratio | Electronic gear ratio should be lower to prevent current noise. |
| Mechanical | Better structural rigidity to prevent vibration. |

| | |
|---|---|
| structure | |
| Motion | 1. Command acceleration should be continuously low to prevent deviation change during drastic changes in acceleration.<br>2. Callback or overtravel might exist in positioning; sigmoid signal command might improve the problem. |

**Related parameters**

| Parameter | Label | Description |
|---|---|---|
| P02.50 | Model following control | 0：Model following control - Default<br>1：Zero tracking control |
| P02.53 | Dynamic friction compensation coefficient | Range: 0-1000, unit: 0.1%<br>Unit：Changes in torque with the effect of friction on rotational speed.<br>Only valid when MFC is activated |
| P00.00 | Model following bandwidth | If P00.00 = 0, MFC and ZTC is deactivated.<br>When P02.50 = 1 (Zero tracking control), higher bandwidth will improve following performance but noise will be higher. |
| Set the following parameters to default | | |
| P02.51 | Velocity feedforward compensation coefficient | Default value = 0 for zero tracking control. |
| P02.52 | Torque feedforward compensation coefficient | |
| P02.54 | Overtravel time constant | |
| P02.55 | Overtravel suppression gain | |

## 6.11 Friction compensation function

This function is to compensation for changes in load to reduce the effect of friction in motion. The compensation value is directional.

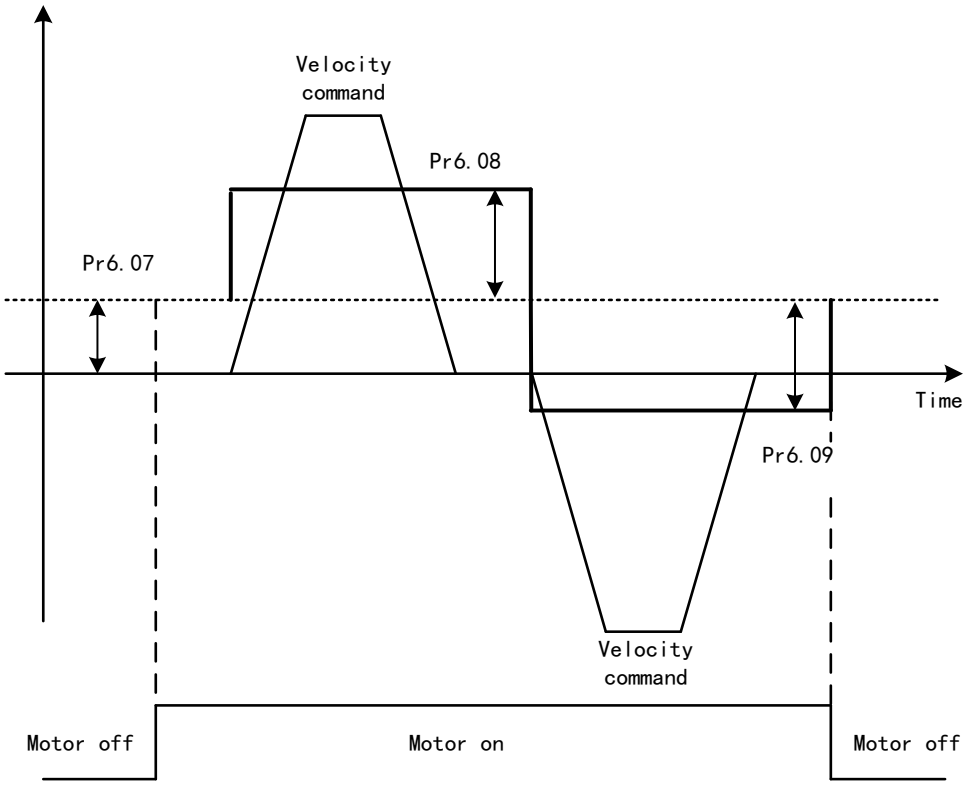


Vertically loaded axis: A constant eccentric load torque is applied on the motor. By adjusting P06.07, positioning deviation due to different motional direction can be reduced. Belt-driven axis: Due to large radial load with dynamic frictional torque. Positioning time delay and deviation can be reduced by adjusting P06.08 and P06.09.

| | | | | | | |
|---|---|---|---|---|---|---|
| **P06.07** | **Label** | Torque command additional value | **Mode** | **F** | | |
| | **Range** | -100~100 | **Default** | 0 | **Unit** | % |
| | **Activation** | Immediate | | | **Index** | 2607h |
| | To set torque forward feed additional value of vertical axis.<br>Applicable for loaded vertical axis, compensate constant torque.<br>Application: When load move along vertical axis, pick any point from the whole motion and stop the load at that particular point with motor enabled but not rotating. Record output torque value from d04, use that value as torque command additional value (compensation value) | | | | | |

| | | | | | | |
|---|---|---|---|---|---|---|
| **P06.08** | **Label** | Positive direction torque compensation value | **Mode** | **F** | | |
| | **Range** | -100~100 | **Default** | 0 | **Unit** | % |
| | **Activation** | Immediate | | | **Index** | 2608h |
| **P06.09** | **Label** | Negative direction torque compensation value | **Mode** | **F** | | |
| | **Range** | -100~100 | **Default** | 0 | **Unit** | % |

| | Activation | Immediate | Index | 2609h |
|---|---|---|---|---|

To reduce the effect of mechanical friction in the movement(s) of the axis. Compensation values can be set according to needs for both rotational directions.

Applications:

1. When motor is at constant speed, d04 will deliver torque values.

Torque value in positive direction = T1;

Torque value in negative direction = T2

P06.08/P06.09 = $T_f$ = $\frac{|T1 - T2|}{2}$

## 6.12 Vibration Suppression

### 6.12.1 Mechanical resonance suppression

Mechanical system has certain resonance frequencies. When servo gain is increased, resonance might occur at around mechanical resonant frequencies, preventing gain value from increasing. In such situation, notch filter can be used to suppress resonance to set higher gains or lower vibration.

To suppress mechanical resonance:

1. Torque command filter time constant
   Set filter time constant to reduce gain at around resonant frequencies
   Torque command filter blocked frequencies（Hz） fc=1/ [2π×P01.04(0.01ms)×0.00001）]
2. Notch filter
   Notch filter suppress mechanical resonance by reducing gain at certain frequencies. When notch filter is correctly set, resonance can be suppressed and servo gain can be increased.

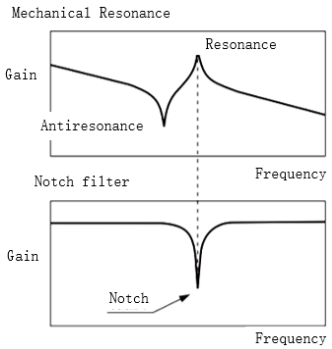


- Notch filter bandwidth
  Center frequency of the notch filter, frequency bandwidth with reduction of -3dB.
- Notch filter depth
  The ratio between input and output of center frequency.
  When depth = 0, center frequency output is totally off and when depth = 100,

Hence when notch filter depth is set at lower value, the depth is higher and better at suppressing mechanical resonance but it might cause system instability.

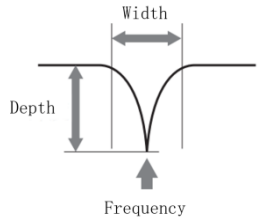


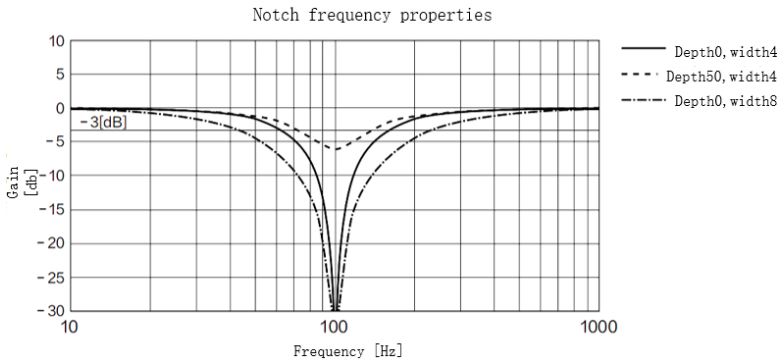


If the ___ from mechanical properties analysis tool doesn't show any obvious peak but vibration did occur, it might not be due to mechanical resonance, it may be that servo gain has reached its limit. This kind of vibration can't be suppressed by using notch filter, only by reducing gain and torque command filter time.

## To use notch filter

Automatic notch filter

1. Set P02.00 = 1 for auto notch filter adjustment
2. If P00.03 stiffness increases, 3rd group of notch filter (P02.07/P02.08/P02.09) updates automatically when driver is enabled. P02.00 = 0, auto adjustments stop. If resonance is suppressed, it means self-adjusting notch filter is working. If resonance occurs when mechanical stiffness increases, please use manual notch filter, set filter frequency to actual resonant frequency.

Manual notch filter

There are 2 ways to use manual notch filter.

1. After enabling self-adjusting notch filter, set the values from 3rd group of filters to 1st group of notch filter (P02.01/P02.02/P02.03), see if resonance is suppressed. If there is other resonance, set P02.00 = 1, then set the values from 3rd group of filters to 2nd group of notch filter (P02.04/P02.05/P02.06)
2. Get resonant frequency, notch filter bandwidth and depth and set it into the corresponding parameters through Motion Studio.

## 6.12.2 End vibration suppression

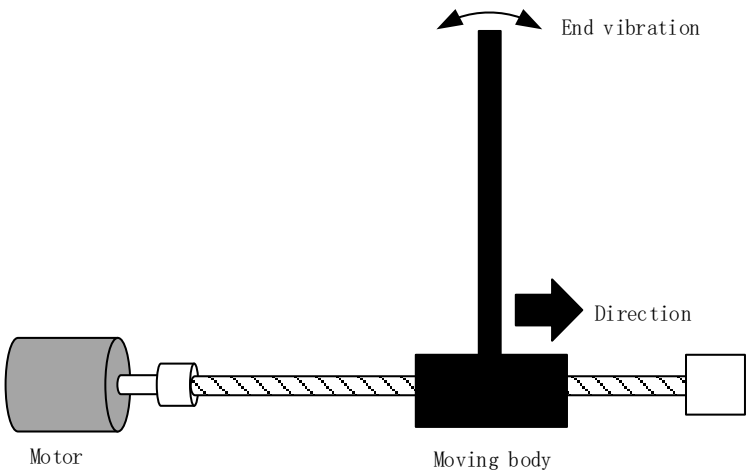


If the mechanical has an end that is long and heavy, it might cause end vibration at emergency stop and affect the positioning. Usually happens on long armed axis with loose end. The frequency is usually within 100Hz which is lower than mechanical resonant frequencies. It is called low-frequency resonance which can be prevented by applying low frequency suppression function.

### To apply low frequency suppression

1. Trace current/ position deviation waveform when motion stops.
2. Measure the vibration cycle T1 of current waveform.
3. Convert T1 into low frequency resonance by F1 = 1/T1
4. Write F1 into P02.14
5. If some other low frequency resonance occurs, please repeat step 1-3 and write F2 into P02.16.

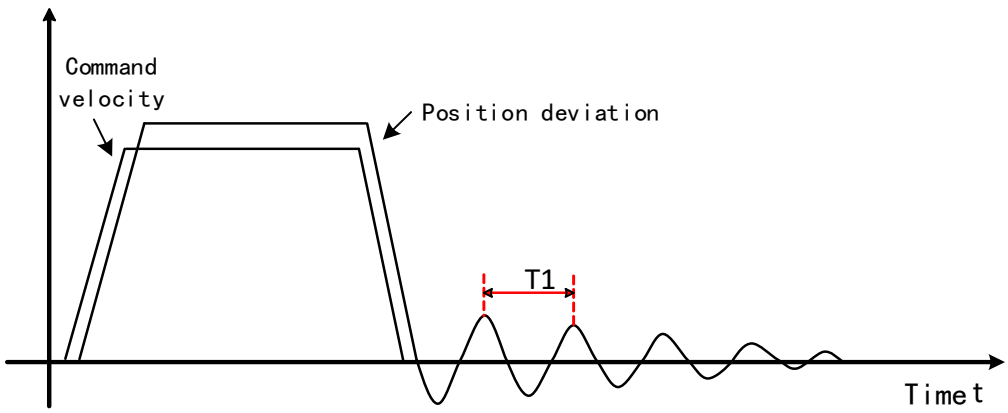

The result of suppressing low frequency resonance

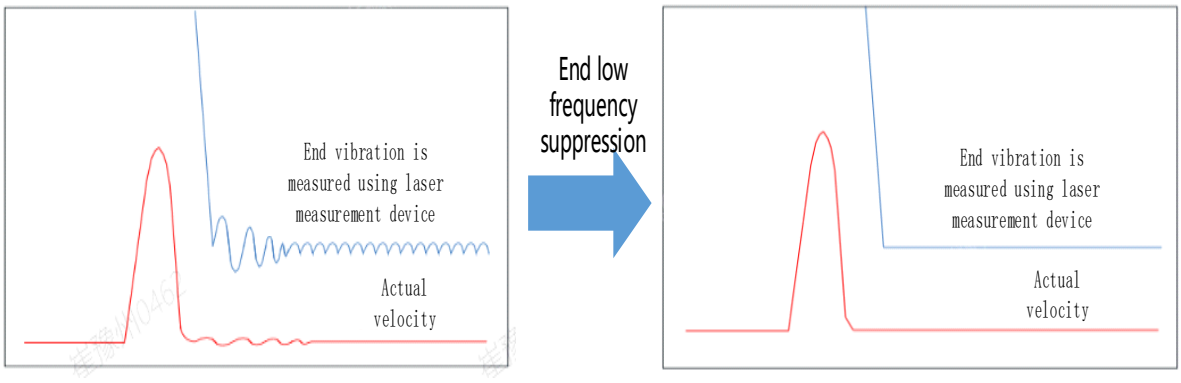


### 6.12.3 Mechanical properties analysis

This function is available on Motion Studio. Mechanical properties analysis is used to determine mechanical resonance and to use filter to suppress the resonance.

## 6.13 Position comparison

Position comparison is achieved by using instantaneous position data in comparison with preset position in position parameters. When the condition(s) is fulfilled, a pulse width configurable DO signal or ABZ/OCZ signal through frequency divider will be delivered. This function is operated in CPLD, without communication delay between processors hence it is suitable for application where high velocity motion is required.

| Position comparison | | Description |
|---|---|---|
| Output trigger | Output | 6 DO or frequency divider ABZ/OCZ signal |
| | Logic | DO output valid as set in P04.10-P04.15 |
| | | ABZ/OCZ output valid as set in P05.42 |
| | | Output mode：Pulse / Flip |
| | Pulse width | P05.72 set pulse width |
| | Delay compensation | P05.72 compensate for hardware delay |
| Comparison source | Motor enclosed | Supported |
| | Closed loop ABZ encoder | Supported |
| Comparison value | Points of comparison | 42 points |
| Comparison attribute | Comparison method | Comparison ON/OFF for positive/negative crossover |
| | | Set comparison output |

Please assign DO as CMP-OUT or ABZ-signal as position comparison output.

## Working principle

- **Enable position comparison P05.70**

  Position comparison function enabled when P05.70 is set to 1. Comparison status will be updated as position comparison starting point. When P05.70 is set to 0, position comparison ends and status clears.

- **Single position comparison**

  Position comparison ends right after 1st position comparison, current comparison value will be reset to 0. Function only enables after position comparison enabling signal is detected. The actual position feedback P05.80 is absolute and added on top of the previous comparison, will not be reset to zero.

- **Cycle comparison**

  Position comparison does not end right after 1st position comparison, current comparison value will be set as position comparison starting point. Actual position feedback P05.80 will be cleared after every comparison. Under cycle comparison, target position is relative increment. After previous comparison, actual position feedback will be cleared and restart counting, in comparison with new target position.

- **N Cycle comparison**

  Number of cycles is set in P05.83. When the number of cycles set reached, position comparison function is turned off.

- **Position comparison output width P05.72**

  When position comparison condition(s) fulfilled, output can be delivered through DO or frequency divider ABZ/OCZ signal. Signal pulse width can be set in P05.72. Please make sure the output signal width is less than the travel between 2 target positions.

- **Position comparison target position**

  42 target positions. Target position value and its corresponding attributes can be set in P03.32~P03.94.

- **Position comparison starting point P05.74**

  Indicates the first comparison point. For example, if P05.74 is set to 5, position comparison will start from 5th target position.

- **Position comparison end point P05.75**

  Indicates the last comparison point. For example, if P05.75 is set to 7, position comparison will stop at 7th target position.

- **Position comparison – Offset to origin P05.78**

  When P05.77 is triggered, P05.80 actual position will automatically be set as P05.78 offset value.

## Applying position comparison

Output pulse width is set in P05.72. Output pulse will be sent once the position comparison point is crossed and attributes conditions is fulfilled.

When the attribute of position comparison is set to positive crossing, position feedback becomes larger, position comparison will be enabled; if position feedback becomes smaller, it indicates negative crossing and position comparison will be disabled.

Diagram below shows position comparison point 1 as positive crossing and position comparison point 2 as negative crossing. When position comparison point 2 is positively crossed, position comparison will be disabled.

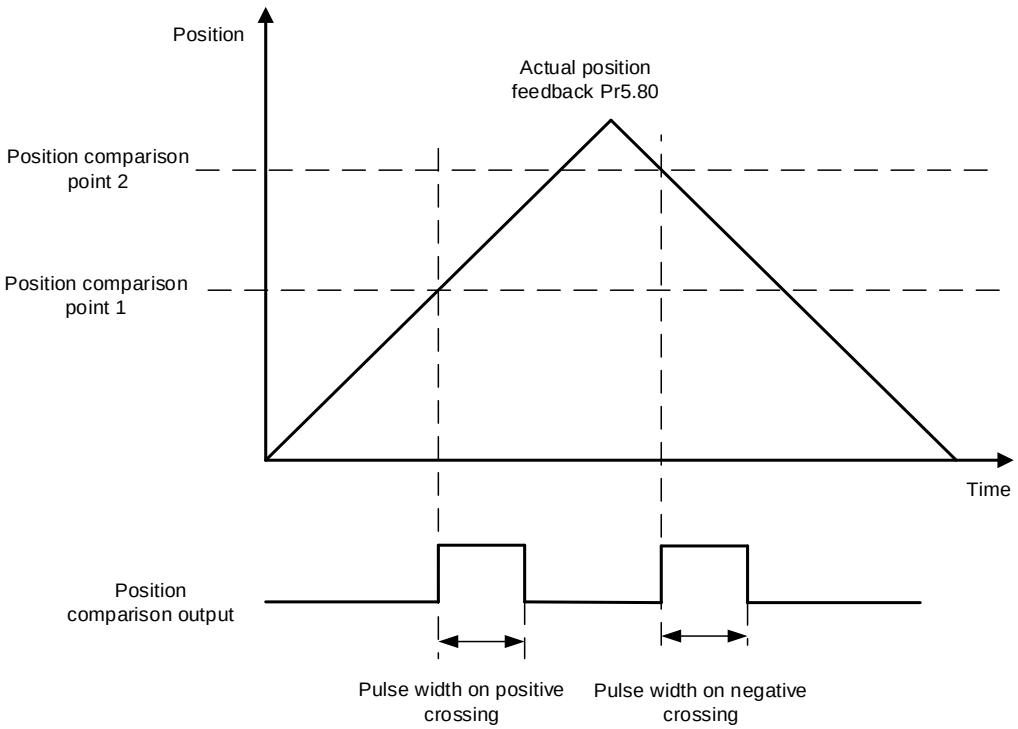


When multiple position comparison points are set, make sure the travel time between 2 comparison points are larger than the output pulse width as position comparison will be temporarily disabled during output.

Diagram below shows travel time between 2 points is smaller than output pulse width

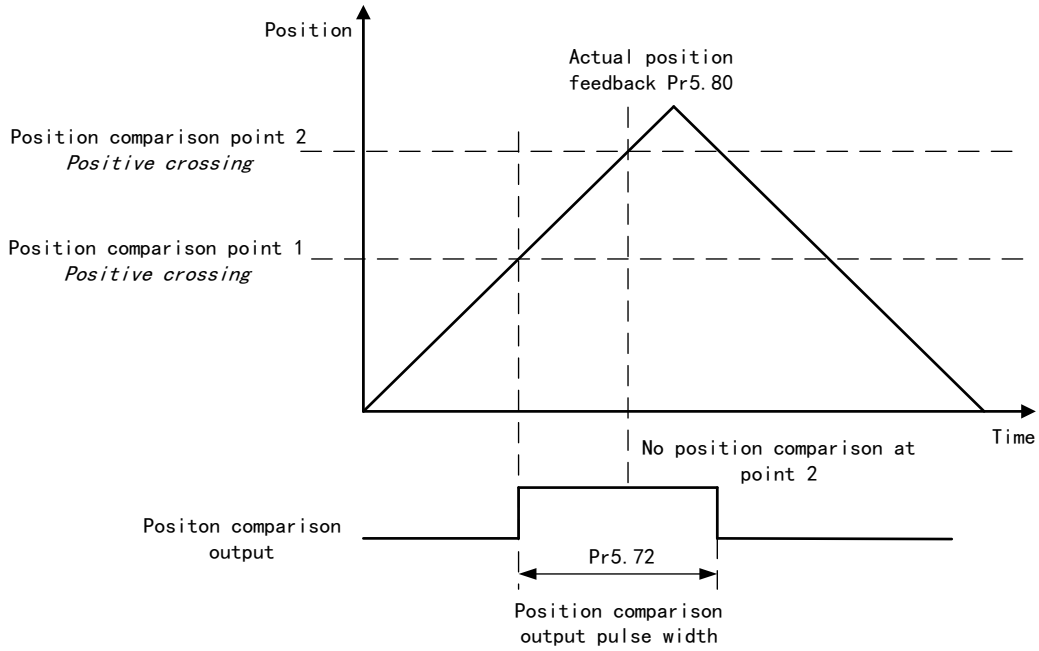


When stopping at position comparison point, there will only be 1 pulse output as with crossing a comparison point.

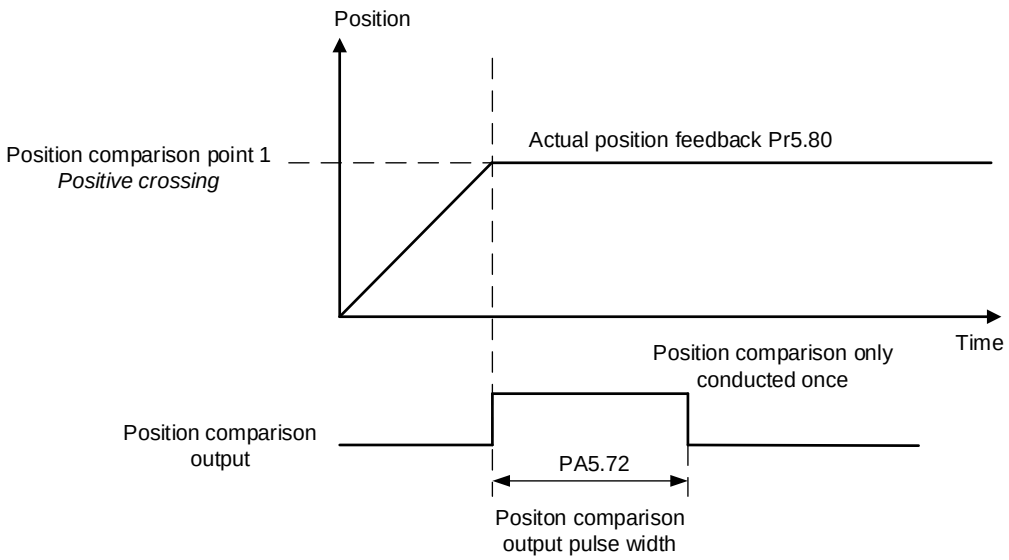


In overturn mode, output pulse width will be overturned as the position comparison point is crossed.

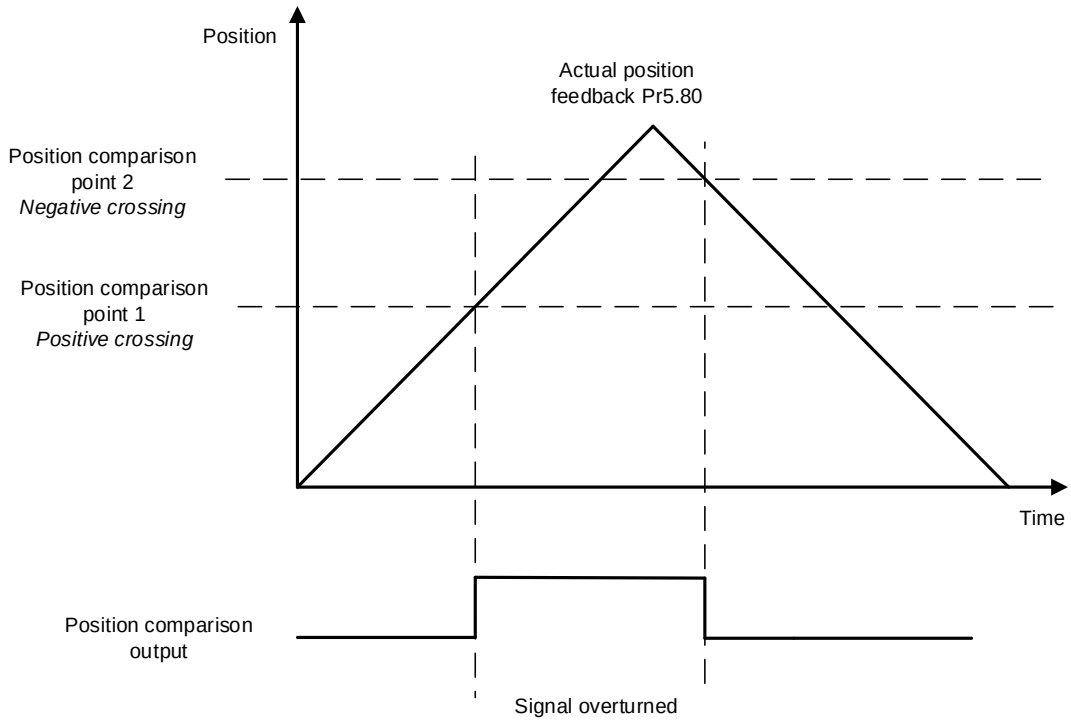
Position
Actual position
feedback Pr5.80
Position comparison
point 2
Negative crossing
Position comparison
point 1
Positive crossing
Time
Position comparison
output
Signal overturned

## 6.14 Black box

Black box is a function which allows users to set conditions or data to be captured whenever error occurs. The data will be recorded by black box at the moment of error occurrence and automatically saved. Thus, through Motion Studio, user can analyze cause of the problem with the aid of black box data.

Black box is deactivated by default. It is user configurable to choose whether to overwrite current data or when to overwrite the data in black box.

### Setting Up Black Box

1. Click on "Black Box" under "Tool" to enter Black box setup. There 3 methods to trigger black box function: 1. Random error, 2. Specific error, 3. Conditions triggering. Choose trigger method as accordance to needs. Please pay attention to Data Overlay Mode and choose the option needed before start.

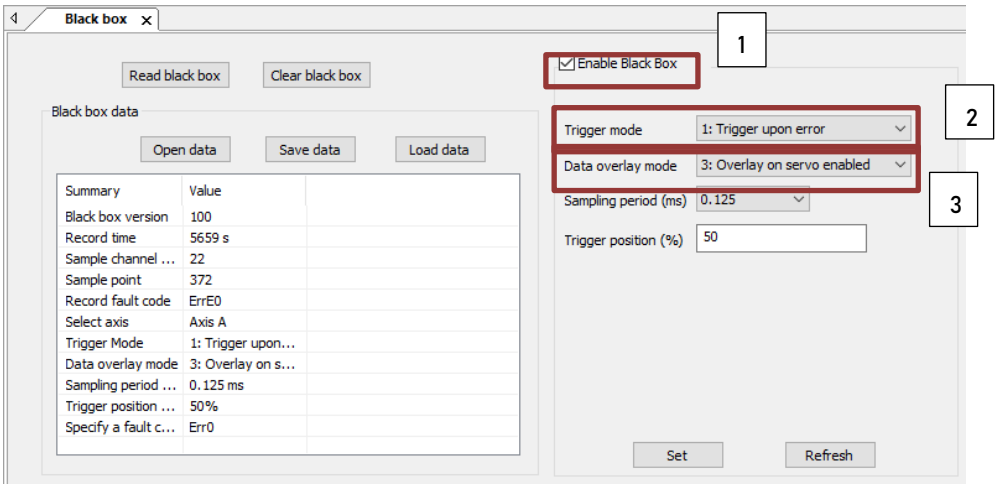


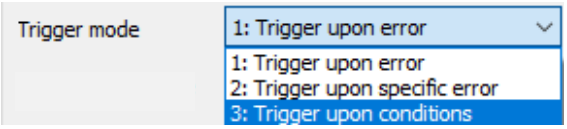


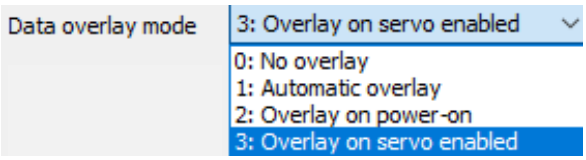

2. Trigger mode 2: Trigger black box whenever a chosen specific error occurs.

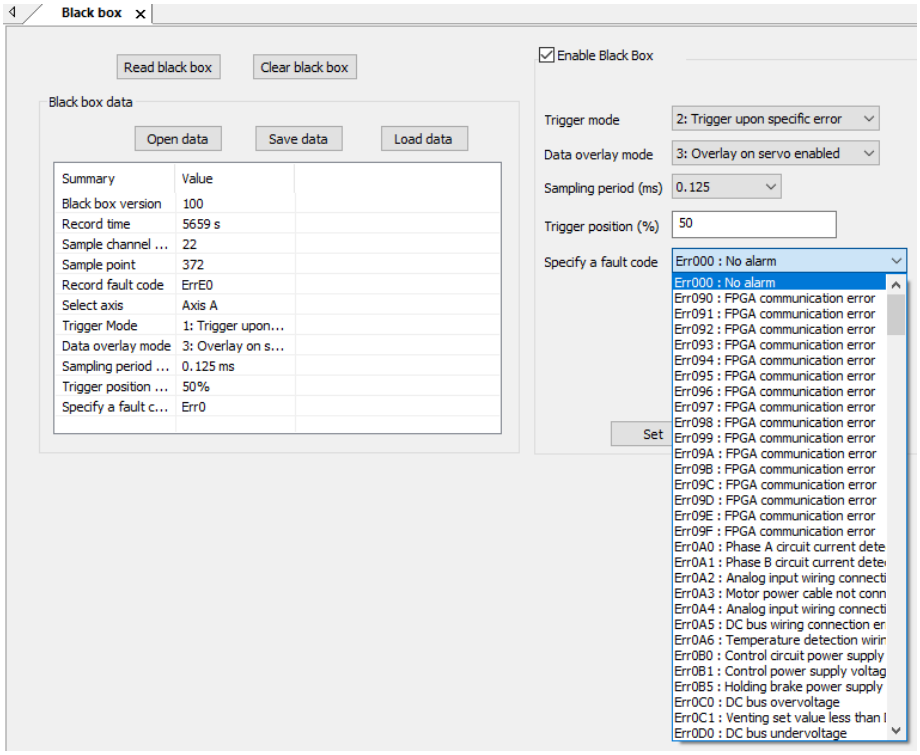


3. Trigger mode 3: Conditions for black box functions to be triggered can set. Set the source, level and edge of the trigger as shown below.

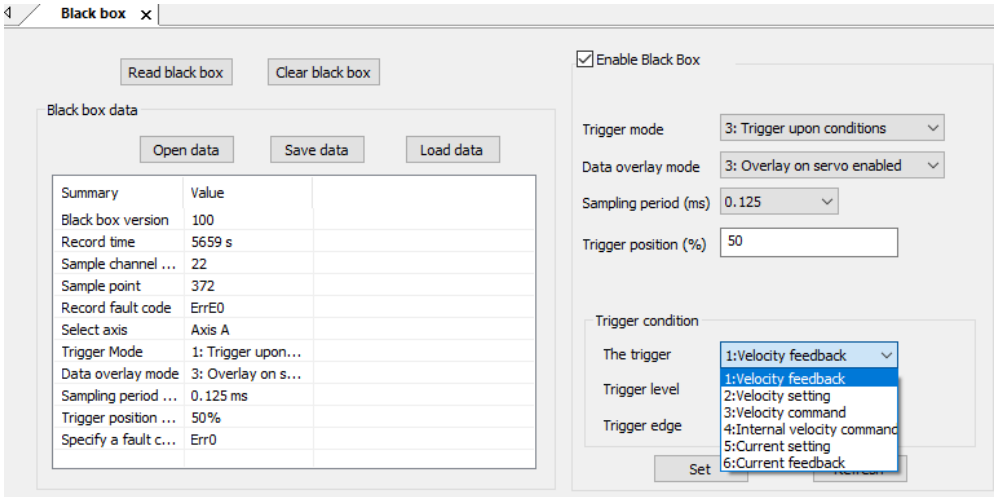


4. Data overlay mode: To select how and when black box data is overlaid. 0: Do not overlay data (Black box will only preserve the data of the first trigger). 1: Always overlay (Black box data will be overlaid every time). 2: Overlay upon powered on (Data overlaid occurs when servo drive is powered on) 3: Overlay when enabled (Data overlaid occurs when servo drive is enabled).

5. Sampling period (ms): The lower the set value, the more precise the samples are but sampling time will be shorter.
6. Trigger position (%): Set the position of trigger within the sampling period.
7. Click on "Set" to save the settings to driver.

Data recorded in Black Box can be read and cleared. The data can also be saved and read by anyone from this function interface for further

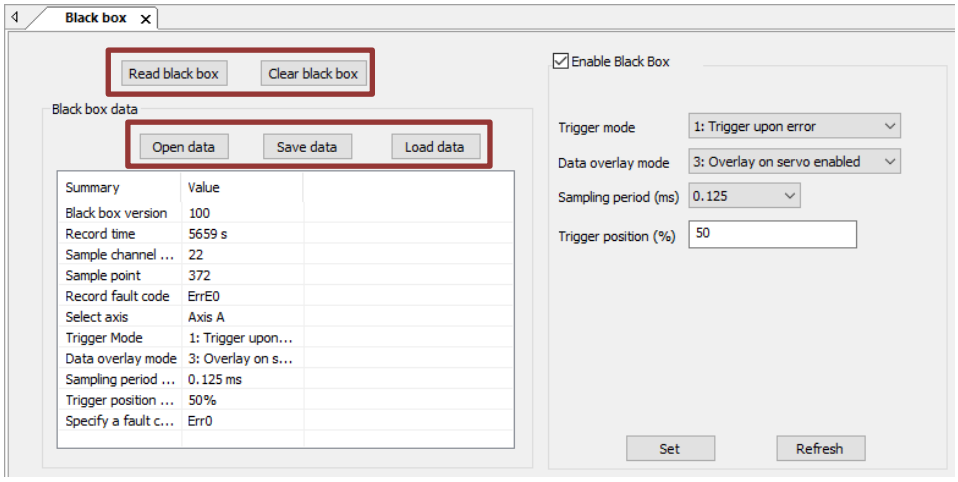

# 6.15 Full closed loop control

Full closed loop control utilizes external position sensor (i.e. grading ruler) to get an actual position feedback to implement position control. This control can compensate for lead screw tolerance and any changes due to temperature.
Parameters setting needs to make sure a smooth axis motion profile. No overtravel or abnormal noise at stopping.

**1. Set external encoder**

External encoder type can be set accordingly in P00.31. At the moment, only ABZ incremental encoder is supported.

| Parameter | Label | Range | Description |
|---|---|---|---|
| P00.31 | External encoder type | 0~3 | =0：ABZ incremental encoder<br>=1：Communication incremental encoder<br>=2：Communication absolute incremental encoder (Tamagawa protocol)<br>=3：BISS-C |

**2. Set direction of external encoder**

Please make sure the direction of the external encoder is the same as the motor encoder to prevent motor runaway.

a) Enter position JOG mode. Jog the motor in the same direction at low velocity. Monitor if the feedback value of d21 absolute encoder single turn position and d21_1 external encoder are changing in the same trend. If they are not the same, inverse the setting of P00.32.

b) The feedback value of d21 and d21_1 can be verified by pushing the axis and monitoring the trend of the changes. Please make sure the servo axis is disabled.

c) Use trial run to set up a reciprocating motion. Max velocity > 200rpm. If d49 = 1 after several cycles of motion, set P00.32 to 1; d48 External encoder feedback pulse count per revolution.

**3. Set external encoder feedback pulse count**

When P00.37 = 0, set external encoder feedback pulse count per revolution in P00.36. If the lead size of lead screw and encoder accuracy are known, please calculate using the formula below and enter the result into P00.36.

$$\mathrm{P00.36} = \frac{\text{Lead size of lead screw (mm)}}{\text{Encoder accuracy } (\frac{\mu\text{m}}{\text{pulse}})}$$

*23-bit encoder resolution = 8388608 pulses*

Please make sure the parameters are set correctly to avoid excessive position deviation especially after long range motion. This may trigger excessive hybrid control deviation error alarm.

| Parameter | Label | Range | Description |
|---|---|---|---|
| P00.35 | External encoder frequency divider numerator | $0\sim2^{23}$ | To set external encoder frequency divider numerator<br>When P00.35 = 0, numerator = resolution of encoder |
| P00.36 | External encoder frequency divider denominator | $1\sim2^{23}$ | To set external encoder frequency divider denominator |
| P00.37 | External encoder feedback pulse count per revolution | 0~2147483648 | When P00.37 = 0, P00.36 set value = external encoder feedback pulse count per revolution. |

**4. Set alarm threshold**

- Excessive hybrid deviation (P00.33)
  To set alarm threshold value for the position deviation between motor actual position and external encoder actual position. Er191 might occur if position deviation exceeds alarm threshold value.
- Clear hybrid control deviation (P00.34)
  Use to set the condition to clear hybrid control deviation (Only in full closed loop control mode)

| Set value | Description |
|---|---|
| 【0】 | OFF |
| 1~100 | Revolution count to clear hybrid control deviation |

**5. Set encoder feedback mode**

Set P00.30 = 1 to enable external encoder feedback, this is to activate full closed loop control. P00.01 needs to be set to 1 to enable this function. Please restart driver after modifying this parameter.

| Parameter | Label | Range | Description |
|---|---|---|---|
| P00.30 | Encoder feedback mode | 0~2 | =0：Motor encoder<br>=1：External encoder (Full closed loop control)<br>=2：Reserved |

# 6.16 Multiturn absolute encoder

Multiturn absolute encoder records the position and the revolution counts of the motor. When driver is powered-off, multiturn absolute encoder will backed up the data using battery and after powering on, the data will be used to calculated absolute mechanical position and there is no need for a mechanical homing process. Use widely in robotic arms and CNC machines.

If it is the first time using the encoder, please home the mechanical axis and initialize the absolute position of the encoder to zero. Set up a homing point and only home when there is an alarm. Please stop the axis before reading any position data to prevent inaccuracy.

## 6.16.1 Parameters setting

| | | | | | | |
|---|---|---|---|---|---|---|
| **P00.15** | **Label** | Absolute Encoder settings | **Mode** | **PP** | **HM** | **CSP** |
| | **Range** | 0~32767 | **Default** | 0 | **Unit** | - |
| | **Activation** | Immediate | | | **Index** | 2015h |

**0: Incremental mode**:
Used as an incremental encoder. Doesn't retain position data on power off. Unlimited travel distance.

**1: Multiturn linear mode**:
Used as a multiturn absolute encoder. Retrain position data on power off. For applications with fixed travel distance and no multiturn data overflow.

**2: Multiturn rotary mode**:
Used as a multiturn absolute encoder. Retrain position data on power off. Actual data feedback in between 0-(P06.63). Unlimited travel distance.

**3: Single turn absolute mode:**
Used when travel distance is within 1 revolution of the encoder. Data overflow will trigger alarm.

**5:** Clear multiturn alarm and activate multiturn absolute function. Will switch to multiturn mode once alarm cleared, if remains at 5 after 3s, please solve according to Er153.

**9:** Clear multiturn position, reset multiturn alarm and activate multiturn absolute function. Will switch to multiturn mode once alarm cleared, if remains at 9 after 3s, please solve according to Er153. ***Please disable axis before setting to 9 and home the axis before using.***

## 6.16.2 Read absolute position

1、Steps：

1) First, select a motor with multiturn absolute encoder, install battery and confirm whether the driver version supports the specific motor;

2) Set P00.15 = 1. If it is the first time of installation, Err153 will occur because battery is newly installed and position data is invalid. Please home the axis and initialize the absolute position of the encoder to zero.

3) When absolute homing point is set and there is no fault with the battery, the alarm will be cleared

4) Finally, the user can read the absolute position. Position won't be lost even if the driver is powered off.

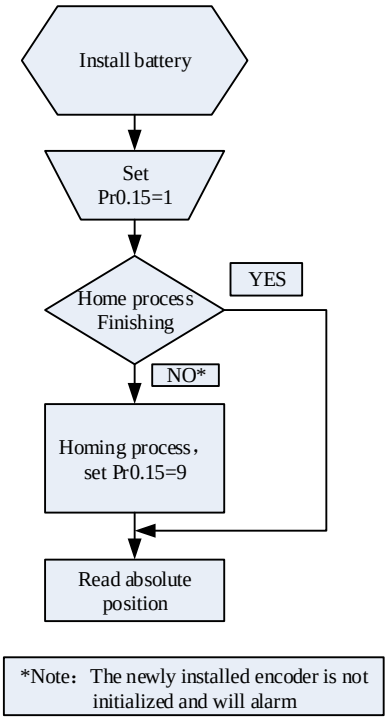


2、Read absolute position

When the rotor turns in clockwise direction, the revolution count will be negative; turns in counter clockwise direction, the count will be positive. No. of revolutions will be from -32767 to +32767. If the count number reaches +32767 in counter clockwise direction, the count will revert back to -32768, -32767 and vice versa for clockwise direction.

As for position data, it depends on the precision of the encoder. For 17 bit = 0-131071, 23 bit = 0-8388607

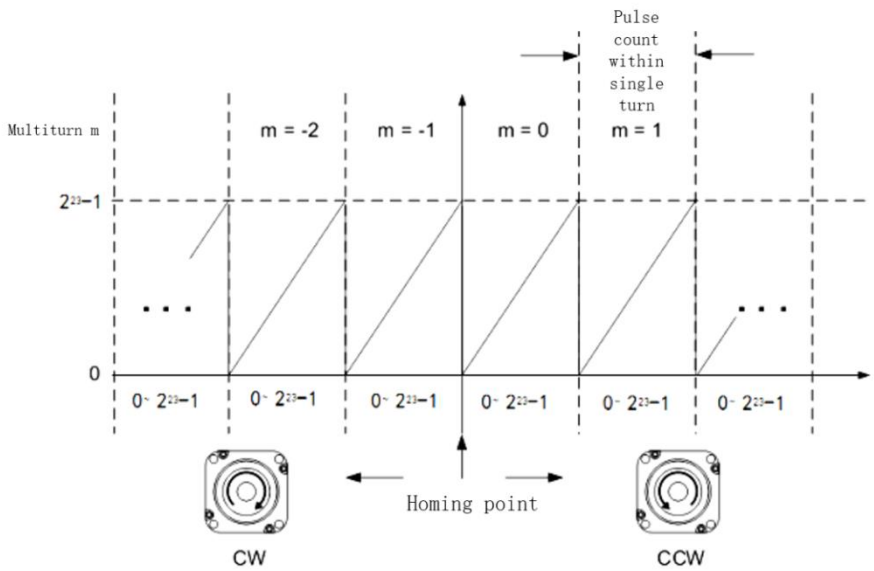


Read data from 6064h object dictionary

*Please read data only when the motor is fully stopped or it might cause calculation errors. Please repeat this step for at least twice to make sure the result is uniform.*

## Multiturn linear mode(P00.15 = 1)

Multiturn absolute with memory of position at power off. Use this mode when travel distance is constant, encoder multiturn data would not overflow.

In this mode, encoder data ranges from -32768~32767. If the value either of the limits, Er157 might occur. Set 9 in P00.15 to clear multiturn data and home the axis.

## Multiturn rotational mode

For absolute encoder, multiturn rotational mode (P00.15 = 2, P06.63 set to multiturn upper limit) is added on top of incremental mode and multiturn linear mode. Actual feedback multiturn data is always between 0 – [P06.63 + 1], regardless of the direction of rotation. There is no limit to no. of rotation and no data overflow.

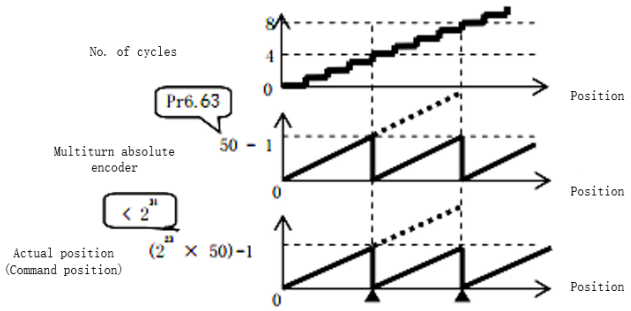


## Single turn absolute mode

Use this mode when the travel distance of the axis is within a single turn of the rotor.

1. Target position input range – EtherCAT

When using 23-bit absolute encoder, under single turn absolute mode, electronic gear ratio =1:1

Homing point offset 607Ch = 0, target position range = 0 – [$2^{23}$-1]

Axis is homed, target position range = 607Ch – [$2^{23}$-1+607Ch]

When electronic gear ratio = 1:1, 607Ch = 0:

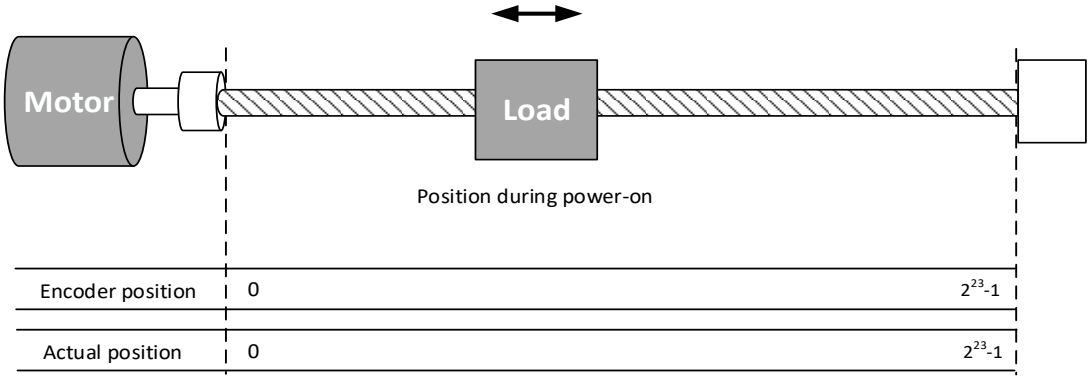


When electronic gear ratio = 1:1, 607Ch = 10000:

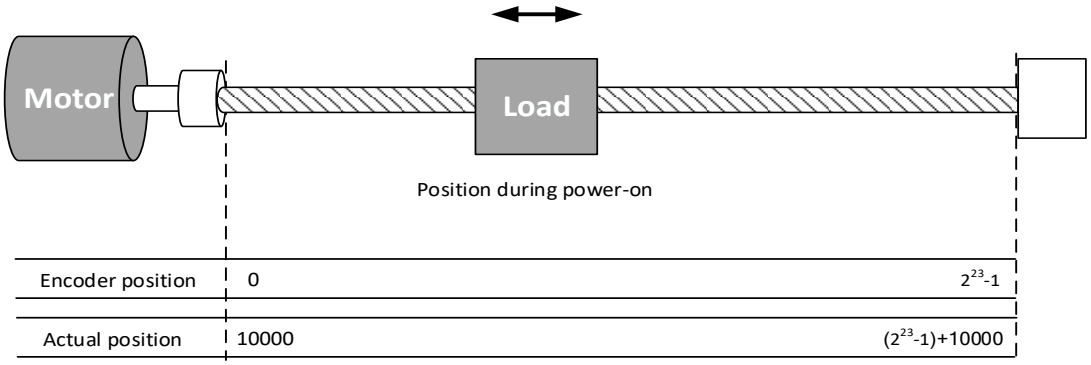


3、Clear multiturn position

Before clearing multiturn position, axis needs to be homed. After clearing multiturn position, revolution count = 0 but absolute position remains unchanged and Err153 alarm will be cleared.

Please make sure the homing point is within the range of 1 revolution of the rotor. Installation and setup of the homing point can be set with the use of auxiliary function D21 on the front panel.

By setting P00.15 to 9, multiturn position will be cleared.

Please take notice of motor position during power on. Range of motion of a motor depends on the position of the motor during power on (23-bit absolute encoder as example).

If the motor position is as shown below during power on. The range of motion of the motor is within the range of a single turn of the motor from motor position during power on.

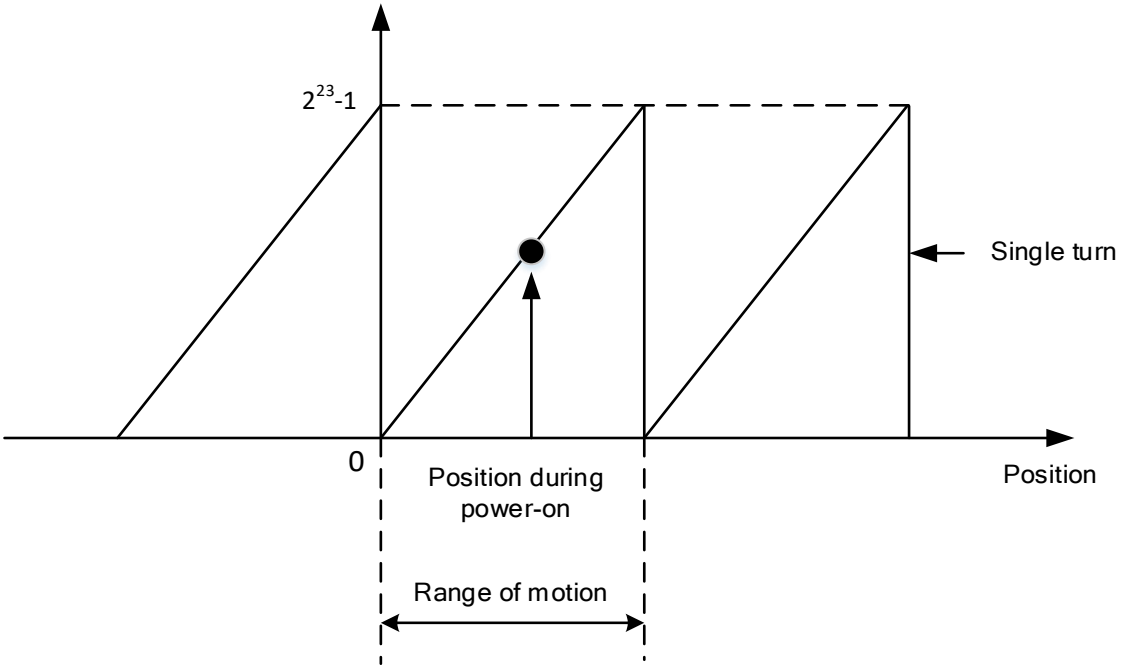


If power is turned off at position as shown below and power on when motor reaches the position below. Motor range of motion changes as shown below.

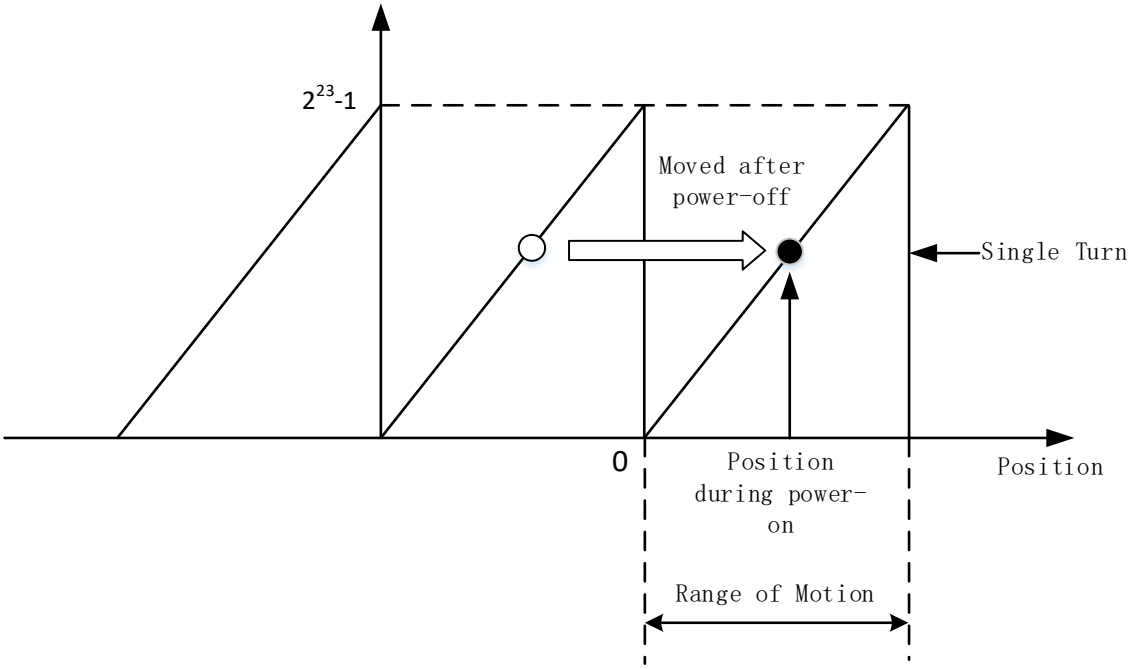

## 6.16.3 Absolute Encoder Related Alarm

The alarm can determine if absolute value encoder is valid. If battery power is low, not a motor with absolute encoder, encoder error etc. occurs, user can find out about the error from alarm output or on the front panel. Controller will stop any operation until alarm is cleared.

Alarm output:

Err153 will be shown on front panel or by I/O ALM signal and from controller.

Err153 might occur,

（1）If absolute encoder is used for the first time and due to installation of new batteries Axis needs to be homed and multiturn data needs to be cleared.

（2）If battery voltage is lower than 3.2v. Replace battery and restart the motor.

（3）If battery voltage is lower than 2.5v or battery power was cut off. Replacing the battery won't clear the alarm. Axis needs to be homed and multiturn data needs to be cleared.

4、Alarm processing flow chart

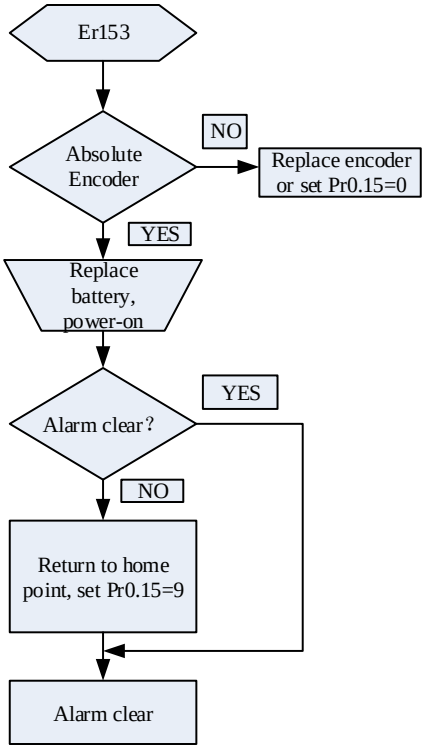


## 6.16.6 Battery kit

In multiturn absolute mode, Er153 might occur upon first time installation. P00.15 needs to be set to 0 to reset error and clear multiturn data.

When battery supply voltage < 3.0V, ArA03 might occur. Change battery as per steps below:

1. Power on driver (Make sure axis is disabled)
2. Change battery
3. Servo drive will reset warning automatically.

## 6.17 Probe

Motor feedback position latching function can be realized through input signal with probe function. ELD3-EC supports up to 2 inputs with probe function and can be used simultaneously, to record the position information corresponding to probe signal rising and falling edge. Probe 1 signal comes from CN1 terminal pin 1 and 5 differential signal. Probe 2 signal comes from CN1 terminal pin 2-6 differential signal.

| | | | | | | |
|---|---|---|---|---|---|---|
| **P00.07** | **Label** | Probe signal polarity settings | **Mode** | **F** | | |
| | **Range** | 0 ~ 3 | **Default** | 3 | **Unit** | — |
| | **Activation** | After restart | | | **Index** | 2007h |

Probe signal polarity settings take effect when P00.01 = 9

| Set value | Details |
|---|---|
| 0 | Probe 1 & 2 polarity inversion |
| 1 | Probe 2 polarity inversion |
| 2 | Probe 1 polarity inversion |
| 3 | No polarity inversion for probe 1 & 2 |

If P00.01 ≠ 9, P00.07 = Command pulse input mode settings.

**Command pulse input**

| Command Polarity inversion (P00.06) | Command pulse input mode settings (P00.07) | Command Pulse Mode | Positive signal | Negative signal |
|---|---|---|---|---|
| 【0】 | 0 *or* 2 | 90°phase difference 2 phase pulse （Phase A+ Phase B） | 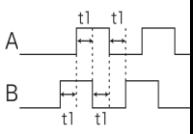  | 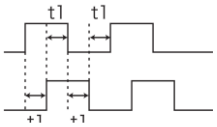  |
| | 1 | CW pulse sequence ＋ CCW pulse sequence | 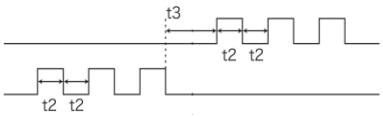  | |
| | 【3】 | Pulse sequence ＋ Directional symbol | 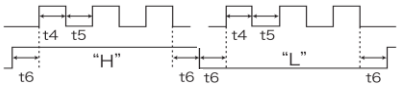  | |
| 1 | 0 *or* 2 | 90°phase difference 2 phase pulse （Phase A＋Phase B） | 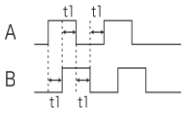  | 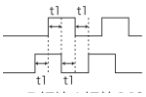  |
| | 1 | CW pulse sequence ＋ CCW pulse sequence | 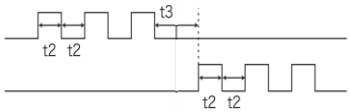  | |

| | | | |
|---|---|---|---|
| | 3 | Pulse sequence<br>+<br>Directional symbol | 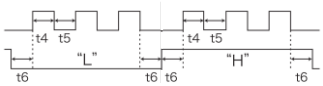 |

**Command pulse input signal max. frequency and min. duration needed**

| Command pulse input interface | | Max. Frequency | Min. duration needed（μs） | | | | | |
|---|---|---|---|---|---|---|---|---|
| | | | t1 | t2 | t3 | t4 | t5 | t6 |
| Pulse sequence interface | Differential | 500 kHz | 2 | 1 | 1 | 1 | 1 | 1 |
| | Open collector | 200 kHz | 5 | 2.5 | 2.5 | 2.5 | 2.5 | 2.5 |

Please set >0.1μs for the duration between rising and falling edge of command pulse input signal.

1 revolution with 2500 pulses 2-phase pulse input when P00.07=0 or 2, P00.08 = 10000;

1 revolution with 10000 pulses 1-phase pulse input when P00.07=1 or 3, P00.08 = 10000

## 6.17.1 Probe function

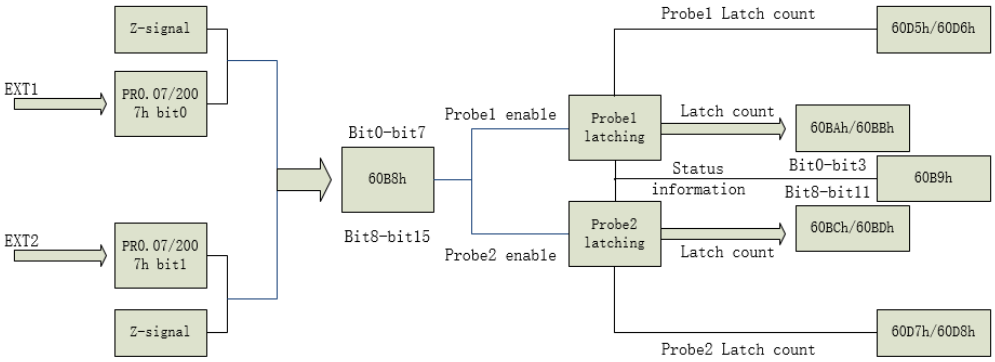


When using EXT1 or EXT2 as probe, please set as following:

a）Set polarity of EXT 1 or EXT 2 as probe. Set the level polarity of the probes using 0x2007 / P00.07. Bit 0 for EXT1 signal, bit 1 for EXT2 signal

b）Probe function is set through 0x60B8 (Bit 0-7 is for probe 1, bit8-15 is for probe 2). Functions including activation trigger signal selection, triggering mode and triggering signal edge.

Please take note:

（i）Triggering mode: Single trigger, rising signal edge = valid; triggering mode: Continuous trigger, rising and falling edge = valid

（ii）After activation, trigger signal selection, triggering signal edge settings, counter will be reset and 0x60B9 status will change as well.

（iii）Probe signal level is shown in 60FD: EXT1 -> bit 26, EXT2 -> bit 27.

**Related Objects**

| Index | Sub Index | Label | Access | Data Type | Units | Range | Default |
|---|---|---|---|---|---|---|---|

| | | | | | | | |
|---|---|---|---|---|---|---|---|
| 2007h | 00h | Probe 1 polarity setting | RW | Uint16 | | 0~0xFFFF | 1 |
| 2007h | 01h | Probe 2 polarity setting | RW | Uint16 | | 0~0xFFFF | 1 |
| 60B8h | 00h | Probe control word | RW | Uint16 | | 0~65535 | 0 |
| 60B9h | 00h | Probe status word | RO | Uint16 | | 0~65535 | 0 |
| 60BAh | 00h | Probe 1or Z-signal rising edge latching position | RO | int32 | Command unit | -2147483648 ~2147483647 | 0 |
| 60BBh | 00h | Probe 1 or Z-signal falling edge latching position | RO | int32 | Command unit | -2147483648 ~2147483647 | 0 |
| 60BCh | 00h | Probe 2 or Z-signal rising edge latching position | RO | int32 | Command unit | -2147483648 ~2147483647 | 0 |
| 60BDh | 00h | Probe 2 or Z-signal falling edge latching position | RO | int32 | Command unit | -2147483648 ~2147483647 | 0 |
| 60D5h | 00h | Probe 1 or Z-signal rising edge counter | RO | Uint32 | | 0~4294967296 | 0 |
| 60D6h | 00h | Probe 1 or Z-signal falling edge counter | RO | Uint32 | | 0~4294967296 | 0 |
| 60D7h | 00h | Probe 2 or Z-signal rising edge counter | RO | Uint32 | | 0~4294967296 | 0 |
| 60D8h | 00h | Probe 2 or Z-signal falling edge counter | RO | Uint32 | | 0~4294967296 | 0 |

## 6.17.2 Signal Input of EXT1 and EXT2

EXT1：Pin1 and Pin5 of CN1 terminal
EXT2：Pin2 and Pin6 of CN1 terminal

## 6.17.3 Probe Control Word 60B8h

| Bit | Definition | Details |
|---|---|---|
| 0 | Probe 1 enable | 0--Disable<br>1--Enable |
| 1 | Probe 1 mode | 0--Single trigger mode<br>1--Continuous trigger mode |
| 2 | Probe 1 trigger signal selection | 0—EXT1 signal<br>1--Z signal |
| 3 | Reserved | - |
| 4 | Probe 1 rising edge trigger | 0--Disable<br>1--Enable |
| 5 | Probe 1 falling edge trigger | 0--Disable<br>1--Enable |
| 6-7 | Reserved | - |
| 8 | Probe 2 enable | 0--Disable<br>1--Enable |
| 9 | Probe 2 mode | 0--Single trigger mode<br>1--Continuous trigger mode |
| 10 | Probe 2 trigger signal selection | 0—EXT2 signal<br>1--Z signal |

| | | |
|---|---|---|
| 11 | Reserved | - |
| 12 | Probe 2 rising edge trigger | 0--Disable<br>1--Enable |
| 13 | Probe 2 falling edge trigger | 0--Disable<br>1--Enable |
| 14-15 | Reserved | - |

## 6.17.4 Probe Status Word 60B9h

| Bit | Definition | Details |
|---|---|---|
| 0 | Probe 1 enable | 0--Disable<br>1--Enable |
| 1 | Probe 1 or Z-signal rising edge trigger | 0-- not executed<br>1-- executed |
| 2 | Probe 1 or Z-signal falling edge trigger | 0-- not executed<br>1-- executed |
| 3-5 | Reserved | - |
| 6-7 | Reserved | - |
| 8 | Probe 2 enable | 0--Disable<br>1--Enable |
| 9 | Probe 2 or Z-signal rising edge trigger | 0-- not executed<br>1-- executed |
| 10 | Probe 2 or Z-signal falling edge trigger | 0-- not executed<br>1-- executed |
| 11-13 | Reserved | - |
| 14-15 | Reserved | - |

## 6.17.6 Latch Position Register

| Index | Details |
|---|---|
| 60BAh | Probe 1 or Z-signal rising edge latch position |
| 60BBh | Probe 1 or Z-signal falling edge latch position |
| 60BCh | Probe 2 or Z-signal rising edge latch position |
| 60BDh | Probe 2 or Z-signal falling edge latch position |

## 6.17.7 Latch Counter Register

| Index | Details |
|---|---|
| 60D5h | Probe 1 or Z-signal rising edge counter |
| 60D6h | Probe 1 or Z-signal falling edge counter |
| 60D7h | Probe 2 or Z-signal rising edge counter |
| 60D8h | Probe 2 or Z-signal falling edge counter |

## 6.17.8 Probe mode

Set bit1/bit9 of 60B8h (Probe mode), 0 = Single trigger mode, 1 = Continuous trigger mode.

（1）Single trigger mode

Triggers only when the trigger signal is valid for the first time. In order to latch the position, users need to set bit0/bit8 of 60B8h to 0, then set bit0/bit8 of 60B8h to 1. The sequence diagram is as shown below:

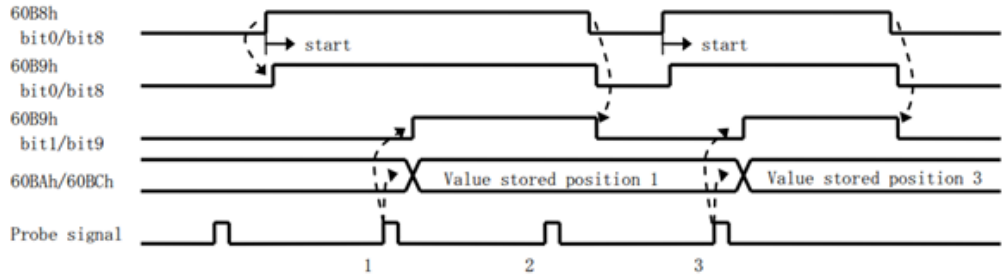


Rising edge trigger signal

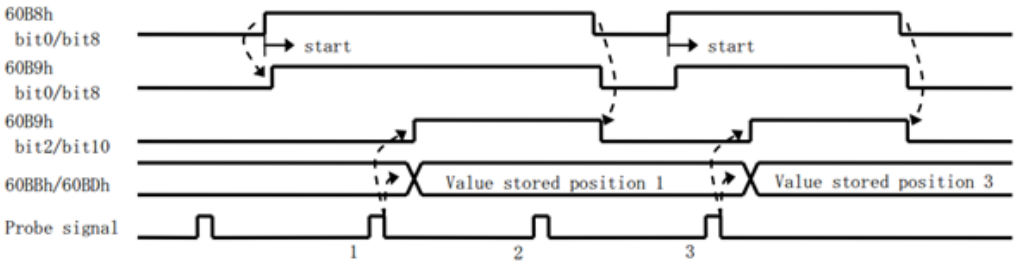


Falling edge trigger signal

（2）Continuous trigger mode

The data saved from signal triggering will be saved until the next trigger signal. Enabling the probe again is not needed. Sequence diagram as shown below:

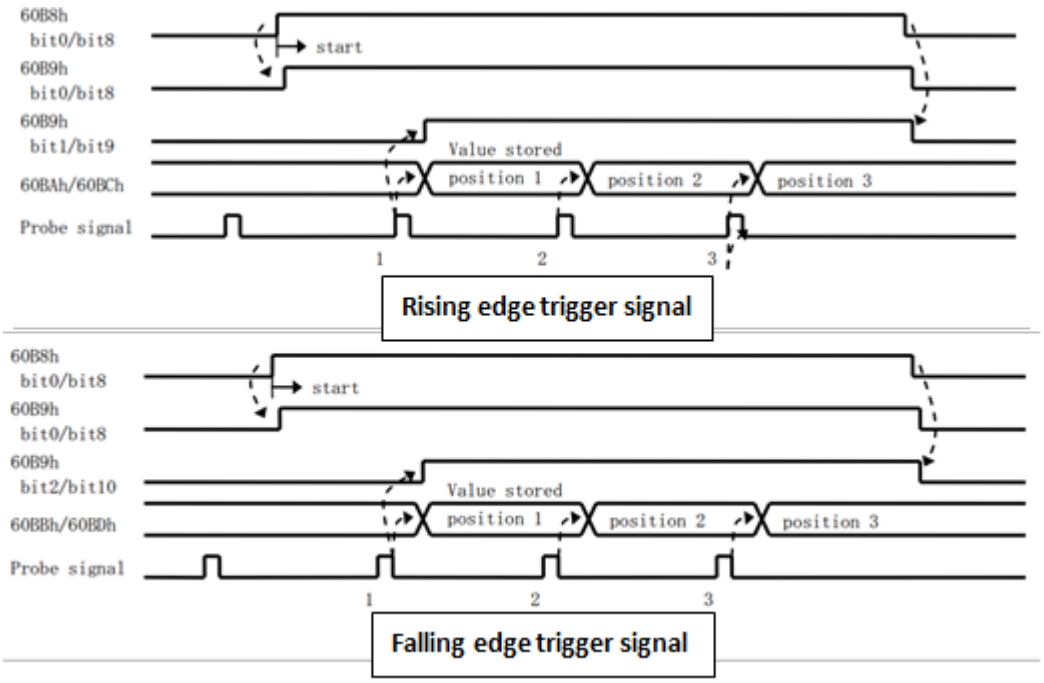


## 6.18 Safety Functions

### 6.18.1 External brake deactivation output signal BRK-OFF

Please refer to P04.11 to set up the I/O output function parameters. When enabled and timing conditions are fulfilled, the set I/O output will deliver ON signal.

| | | | | | | |
|---|---|---|---|---|---|---|
| **P04.37** | **Label** | Motor power-off delay time | **Mode** | **F** | | |
| | **Range** | 0~3000 | **Default** | 100 | **Unit** | 1ms |
| | **Activation** | Immediate | | | **Index** | 2437h |
| | To set delay time for holding brake to be activated after motor power off to prevent axis from sliding. | | | | | |

| P04.38 | Label | Delay time for holding brake release | Mode | F | | |
|---|---|---|---|---|---|---|
| | Range | 0~3000 | Default | 0 | Unit | 1ms |
| | Activation | Immediate | | | Index | 2438h |

To set delay time for holding brake to be released after motor power on. Motor will remain at current position and input command is masked to allow holding brake to be fully released before motor is set in motion.

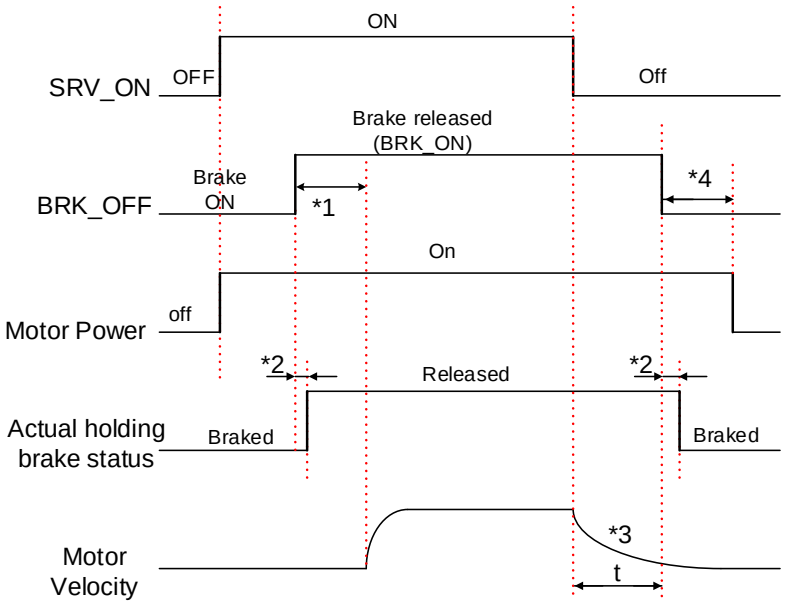


*1: Delay time set in P04.38

*2: Delay time from the moment BRK_OFF signal is given until actual holding brake is released or BRK_ON signal is given until actual holding brake is activated. It is dependent on the holding brake of the motor.

*3: Deceleration time is determined by P06.14 or if motor speed goes below P04.39, whichever comes first. BRK_OFF given after deceleration time.

*4: P04.37 set time value.

*Delay time from the moment SRV_ON is given until BRK_OFF switch to BRK_ON, is less than 500ms.*

| P04.39 | Label | Holding brake activation speed | Mode | F | | |
|---|---|---|---|---|---|---|
| | Range | 30~3000 | Default | 30 | Unit | RPM |
| | Activation | Immediate | | | Index | 2439h |

To set the activation speed for which holding brake will be activated.

When SRV-OFF signal is given, motor decelerates, after it reaches below P04.39 and P06.14 is not yet reached, BRK_OFF is given.
BRK_OFF signal is determined by P06.14 or if motor speed goes below P04.39, whichever comes first.

Application:
1. After disabling axis, P06.14 has been reached but motor speed is still above P04.39, BRK_OFF signal given.
2. After disabling axis, P06.14 has not been reached but motor speed is below P04.39, BRK_OFF signal given.

## 6.18.2 Emergency stop function

Emergency stop is used when an alarm occurs or a servo prohibition signal is received when servo driver is enabled.

Method 1: Set up P04.43 to enable the function

| | | | | | | |
|---|---|---|---|---|---|---|
| **P04.43** | **Label** | Emergency stop function | **Mode** | **F** | | |
| | **Range** | 0~1 | **Default** | 0 | **Unit** | - |
| | **Activation** | Immediate | | | **Index** | 2443h |
| 0：Emergency stop is valid, servo driver will be forced to STOP and alarm occurs.<br>1：Emergency stop is invalid, servo driver will not be forced to STOP. | | | | | | |

| | | | | | | |
|---|---|---|---|---|---|---|
| **P05.04** | **Label** | Driver prohibition input settings | **Mode** | **F** | | |
| | **Range** | 0~2 | **Default** | 0 | **Unit** | - |
| | **Activation** | Immediate | | | **Index** | 2504h |

To set driver prohibition input (POT/NOT): If set to 1, no effect on homing mode.

| Set value | Description |
|---|---|
| 0 | POT → Positive direction drive prohibited<br>NOT → Negative direction drive prohibited |
| 1 | POT and NOT invalid |
| 2 | Any single sided input from POT or NOT might cause Er260 |

In homing mode, POT/NOT invalid, please set object dictionary 5012-04 bit0=1

Method 2: Using 605Ah object dictionary through master device to activate this function.

| | | | | | | |
|---|---|---|---|---|---|---|
| **P05.11** | **Label** | Servo braking torque setting | **Mode** | **F** | | |
| | **Range** | 0~500 | **Default** | 0 | **Unit** | % |
| | **Activation** | Immediate | | | **Index** | 2511h |

To set torque limit for servo braking mode.

If P05.11 = 0, use torque limit as under normal situation.

Between max. torque 6072 and P05.11, actual torque limit will take smaller value.

# 6.19 Other Functions

## 6.19.1 Functions under Position mode

### Electronic gear function

If command frequency from controller is not enough which cause the motor to not reach target rotational velocity, frequency can be increased using this function.

| P00.08 | Label | Command pulse count per revolution | Mode | F | | |
|---|---|---|---|---|---|---|
| | Range | 0~8388608 | Default | 0 | Unit | P- |
| | Activation | After restart | | | Index | 2008h |
| | Pulses per revolution can be set using object dictionary 608F, 6091, 6092. However, P00.08 has higher priority. | | | | | |

| Index 608Fh-01 | Label | Encoder Increments | | | Mode | PT | | |
|---|---|---|---|---|---|---|---|---|
| | Range | 0~2147483647 | | | Default | 0 | Unit | *encoder* |
| | Structure | VAR | Type | UINT32 | Mapping | TPDO | Access | RO |
| | To set encoder resolution | | | | | | | |

| Index 6091h-01 | Label | Motor Revolutions | | | Mode | F | | |
|---|---|---|---|---|---|---|---|---|
| | Range | 1~2147483647 | | | Default | 1 | Unit | r |
| | Structure | VAR | Type | UINT32 | Mapping | RPDO | Access | RW |
| | To set electronic gear ratio numerator | | | | | | | |
| Index 6091h-02 | Label | Shaft Revolutions | | | Mode | F | | |
| | Range | 1~2147483647 | | | Default | 1 | Unit | r |
| | Structure | VAR | Type | UINT32 | Mapping | RPDO | Access | RW |
| | To set electronic gear ratio denominator | | | | | | | |
| Index 6092h-01 | Label | Feed | | | Mode | F | | |
| | Range | 1~2147483647 | | | Default | 10000 | Unit | *Command*/r |
| | Structure | VAR | Type | UINT32 | Mapping | RPDO | Access | RW |
| | If 6092h-01(Feed constant) is not equal to 608Fh(Position encoder resolution), then:<br>Electronic gear ratio = Encoder increments / 6092h-01<br><br>If 6092h-01(Feed constant) is equal to 608Fh(Position encoder resolution), then:<br>Electronic gear ratio = 6091-01 / 6092h-01 | | | | | | | |

## Position command filter function

To smoothen the position command after frequency divider/multiplier

| P02.22 | Label | Position command smoothing filter | Mode | PP | HM | CSP |
|---|---|---|---|---|---|---|
| | Range | 0~32767 | Default | 300 | Unit | 0.1ms |
| | Activation | After stopping | | | Index | 2222h |

To set time constant of 1 time delay filter of position command.
To set time constant of 1 time delay filter, according to target velocity Vc square wave command as show below.

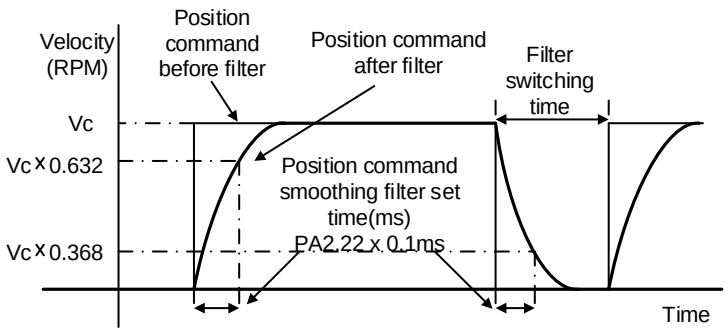


Usually applied when there is rather sharp acceleration which might cause motor overshoot or undershoot. To smoothen command signal, reduces impact to machines and eliminate vibration. If P02.22 is set too high, overall time will be lengthened.

| P02.23 | Label | Position command FIR filter | Mode | PP | HM | CSP |
|---|---|---|---|---|---|---|
| | Range | 0~10000 | Default | 0 | Unit | 0.1ms |
| | Activation | After disabling | | | Index | 2223h |

As shown below, when target velocity Vc square wave command reaches Vc, it becomes trapezoidal wave after filtering.

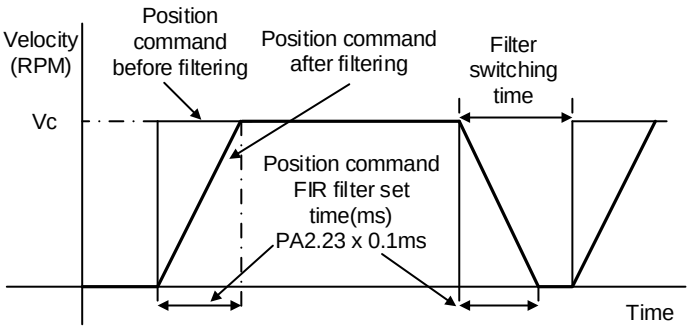


As shown below, when target velocity Vc trapezoidal command reaches Vc, it becomes S wave after filtering.

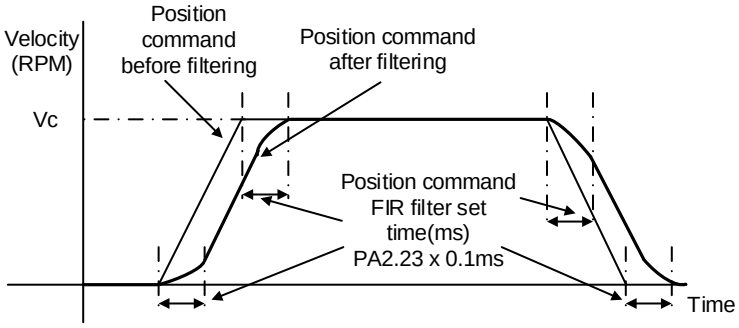


Usually applied when there is rather sharp acceleration which might cause motor overshoot or undershoot. To smoothen command signal, reduces impact to machines and eliminate vibration. If P02.23 is set too high, overall time will be lengthened.

***Please wait for command to stop and after filter idle time to modify P02.23.*

*Filter switching time = (P02.23 set value x 0.1ms + 0.25ms)*

## In Position

Positioning completed status can be determined by output of INP signal. Under position control mode, the absolute value of position deviation counter will be ON if positioning is under the range set in P04.31.

| P04.31 | Label | Positioning complete range | Mode | PP | HM | CSP |
|---|---|---|---|---|---|---|
| | Range | 0~10000 | Default | 20 | Unit | *Command* |
| | Activation | Immediate | | | Index | 2431h |

To set position deviation range of INP1 positioning completed output signal.

| P04.32 | Label | Positioning complete output settings | Mode | PP | HM | CSP |
|---|---|---|---|---|---|---|
| | Range | 0~4 | Default | 1 | Unit | - |
| | Activation | Immediate | | | Index | 2432h |

Output conditions of INP1 positioning completed output signal

| Set value | Positioning completed signal |
|---|---|
| 0 | Signal valid when the position deviation is smaller than P04.31 |
| 1 | Signal valid when there is no position command and position deviation is smaller than P04.31 |
| 2 | Signal valid when there is no position command, zero-speed clamp detection (ZSP) signal is ON and the positional deviation is smaller than P04.31 |
| 3 | Signal valid when there is no position command and position deviation is smaller than P04.31. Signal ON when within the time set in P04.33 otherwise OFF. |
| 4 | When there is no command, position detection starts after the delay time set in P04.33.<br>Signal valid when there is no position command and positional deviation is smaller than P04.31. |

| P04.33 | Label | INP positioning delay time | Mode | PP | HM | CSP |
|---|---|---|---|---|---|---|
| | Range | 0~15000 | Default | 0 | Unit | 1ms |
| | Activation | Immediate | | | Index | 2433h |

To set delay time when P0 4.32 = 3

| Set value | Positioning completed signal |
|---|---|
| 0 | Indefinite delay time, signal ON until next position command |
| 1-15000 | OFF within the time set; ON after time set. Switch OFF after receiving next position command. |

## 6.19.2 Functions under velocity mode

### Velocity reached output signal (AT-SPEED)

AT-SPEED signal delivers after motor velocity reached arrival velocity.

| P04.36 | Label | Reached speed (AT-speed) | Mode | PV | | CSV |
|---|---|---|---|---|---|---|
| | Range | 10~2000 | Default | 1000 | Unit | RPM |
| | Activation | Immediate | | | Index | 2436h |

When motor velocity > P04.36, AT-speed output signal is valid.
Detection using 10RPM hysteresis

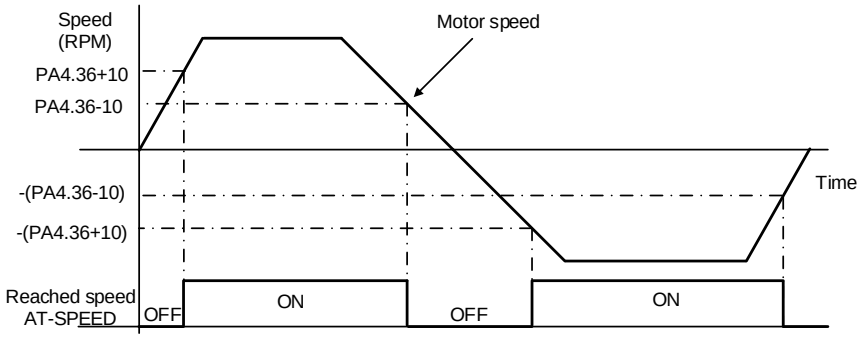

## Velocity coincidence output

Velocity command (before acc-/deceleration) coincides with motor velocity. If the difference between velocity command and motor velocity is within the range set in P04.35, it is treated as the velocity coincides.

| P04.35 | Label | Velocity coincidence range | Mode | PV | CSV |
|---|---|---|---|---|---|
| | Range | 10~2000 | Default | 50 | Unit: RPM |
| | Activation | Immediate | | | Index: 2435h |

If the difference between velocity command and motor actual speed is below P04.35, Velocity coincidence (V-COIN) output signal valid.

Due to 10RPM hysteresis:
Velocity coincidence output OFF -> ON timing (P04.35 -10) r/min
Velocity coincidence output ON -> OFF timing (P04.35 +10) r/min

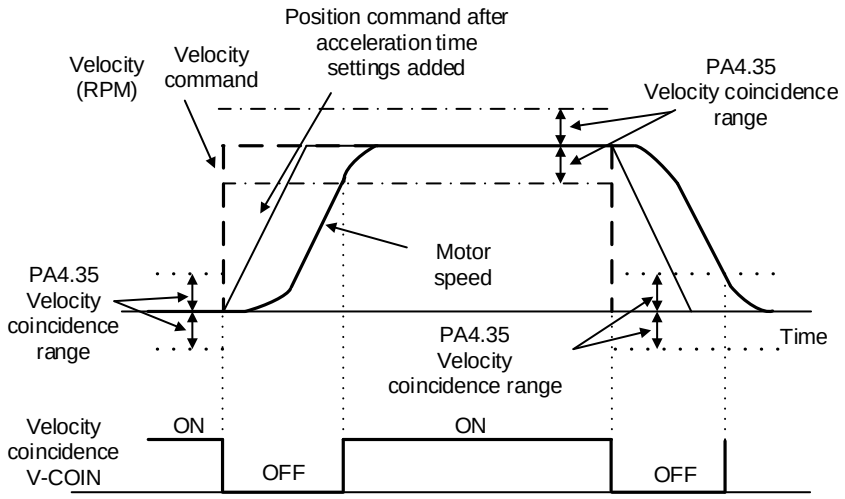

## Zero speed position output

If the absolute value of the velocity feedback satisfies set conditions, corresponding output will be set to ON.

### 6.19.3 Functions under torque mode

Velocity limit is required under torque mode to make sure motor rotational velocity stays within the limit.

| P04.34 | Label | Zero speed | Mode | F | | |
|---|---|---|---|---|---|---|
| | Range | 1~2000 | Default | 50 | Unit | RPM |
| | Activation | Immediate | | | Index | 2434h |

To set threshold value for zero speed clamp detection.

Zero speed clamp detection (ZSP) output signal valid when motor speed goes under the value set in P04.34

- Disregard the direction of rotation, valid for both directions.
- Hysteresis of 10RPM. Please refer to diagram on the right side.

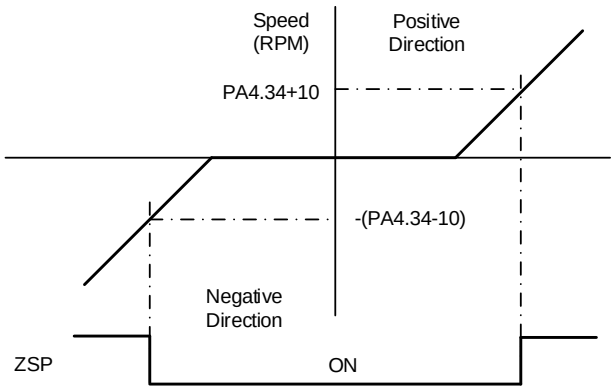


## Velocity limit function

During torque control, velocity control should be within the range of velocity limit. When motor reaches velocity limit, command control will switch from torque control to command control with velocity limit.

Due to gravitational or other external factors, torque command from controller might differ from the direction of rotation of the motor, velocity limit will be invalid. Please error occurs in such situation, please set P05.13 as stopping velocity. If velocity is over the value set in P05.13, Er1A0 might occur and motor will stop.

| P05.13 | Label | Overspeed level setting | Mode | F | | |
|---|---|---|---|---|---|---|
| | Range | 0~10000 | Default | 0 | Unit | RPM |
| | Activation | Immediate | | | Index | 2513h |

If motor speed exceeds P05.13, Er1A0 might occur.
When P05.13 = 0, overspeed level = max. motor speed x 1.2

# Chapter 7 EtherCAT communication

## 7.1 EtherCAT principle function

In comparison to Ethernet protocol which requires huge bandwidth for packets to be moved between master and clients, EtherCAT communication protocol breaks through this systemic limitation of Ethernet which requires every client to receive the whole data package from the master.

The EtherCAT master sends a telegram that passes through each node. Each EtherCAT slave device reads the data addressed to it “on the fly”, and inserts its data in the frame as the frame is moving downstream. The frame is delayed only by hardware propagation delay times. The last node in a segment (or drop line) detects an open port and sends the message back to the master using Ethernet technology’s full duplex feature.

The telegram’s maximum effective data rate increases to over 90 %, and due to the utilization of the full duplex feature, the theoretical effective data rate is even higher than 100 Mbit/s (> 90 % of two times 100 Mbit/s).

The EtherCAT master is the only node within a segment allowed to actively send an EtherCAT frame; all other nodes merely forward frames downstream. This concept prevents unpredictable delays and guarantees real-time capabilities.

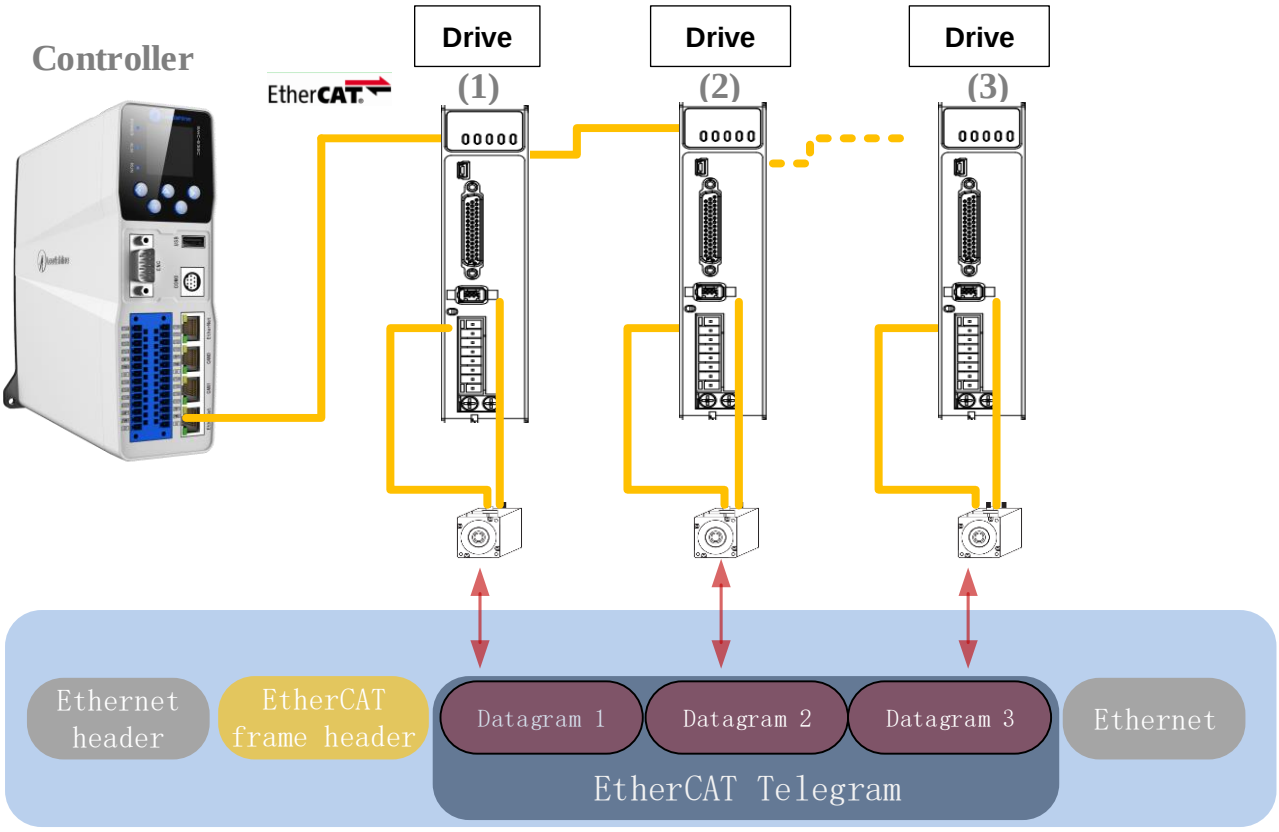


**EtherCAT in standard Ethernet frame**

**ID number setting of EtherCAT slave station**

To set up EtherCAT slave station ID number, please set P00.24 = 1 and set required ID number to P00.23.

| | | | | | | |
|---|---|---|---|---|---|---|
| **P00.23** | **Label** | EtherCAT slave ID | **Mode** | **F** | | |
| | **Range** | 0~32767 | **Default** | 2 | **Unit** | - |
| | **Activation** | After restart | | | **Index** | 2023h |
| Set ID number of the slave station under EtherCAT mode | | | | | | |
| **P00.24** | **Label** | Source of slave ID | **Mode** | **F** | | |
| | **Range** | 0~1 | **Default** | 1 | **Unit** | - |
| | **Activation** | After restart | | | **Index** | 2024h |
| 0: Master device automatically assigns a slave address.<br>1：The slave ID = P00.23 | | | | | | |

# 7.2 Synchronous Mode

## 7.2.1 Free Running Mode

In free running mode, ELD3-EC processes the process data sent by the master asynchronously. It only applies to asynchronous motion mode such as homing mode, protocol position mode, etc

## 7.2.2 Distributed clock synchronization mode

ELD3-EC adopts the synchronous mode of distributed clock as shown in figure 6.2. When the master station sends process data to the slave station, the slave station immediately reads the process data, and then waits for the synchronization signal to trigger the process data to act on the driver.

The process data must arrive at the ELD3-EC drive before the time of Sync0 signal T1. The drive has completed the analysis of the process data and relevant control calculation before the arrival of Sync0 event. After receiving Sync0 event, ELD3-EC immediately implements the control action which has a high synchronization performance.

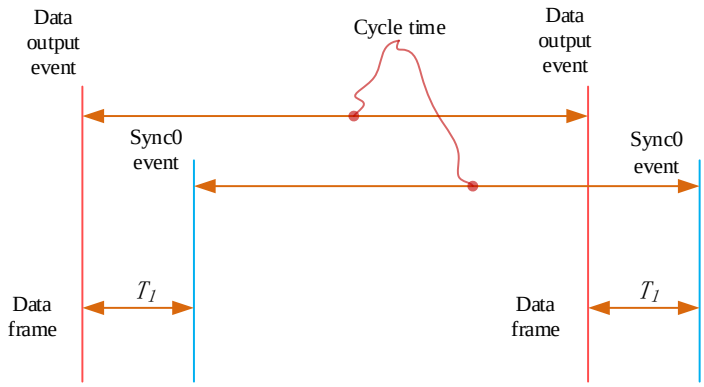


**Figure 7.2 High performance synchronization mode**

## 7.3 EtherCAT state machine

EtherCAT state machine, commonly known as "communication state machine ", is mainly used to manage communication between master and slave stations. The communication function mainly includes mailbox and process data communication. The EtherCAT state machine transition relationship is shown in figure 7.3

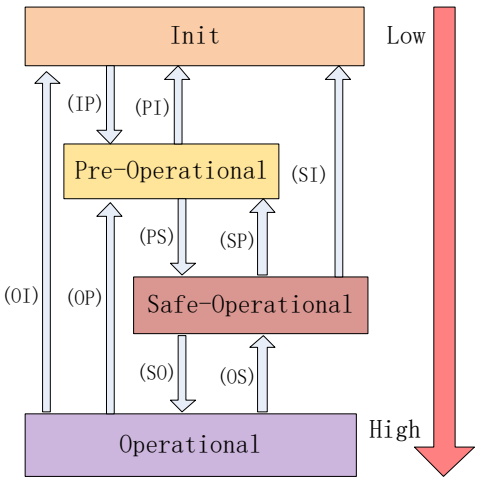


**Figure 7.3 EtherCAT state machine transitions**

EtherCAT state machine transitions have the following characteristics：

① From initialization to operational, the conversion must be carried out strictly in the order of initializing > pre-operational > safe operational > operational, from low to high, and no grade skipping is allowed

② When converting from high to low, grade skipping is allowed.

③ If state transition request to master station fails, slave station will send an error message to the master station.

**EtherCAT 402 State Machine Communication function**

| State and transition | Communication function |
|---|---|
| Init | No mailbox or process data communication is possible. |
| Pre-Operational | Mailbox communication is effective, no process data communication, SDO function is valid |
| Safe-Operational | Mailbox communication and sending process data object is valid, SDO and TXPDO are valid |
| Operational | Mailbox communication, receive and send process data object valid, SDO、RXPDO and TXPDO valid |

# 7.4 CANopen over EtherCAT (CoE)

## 7.4.1 Network structure of ELD3-EC

The structure of ELD3-EC servo system network module is shown in figure 7.4

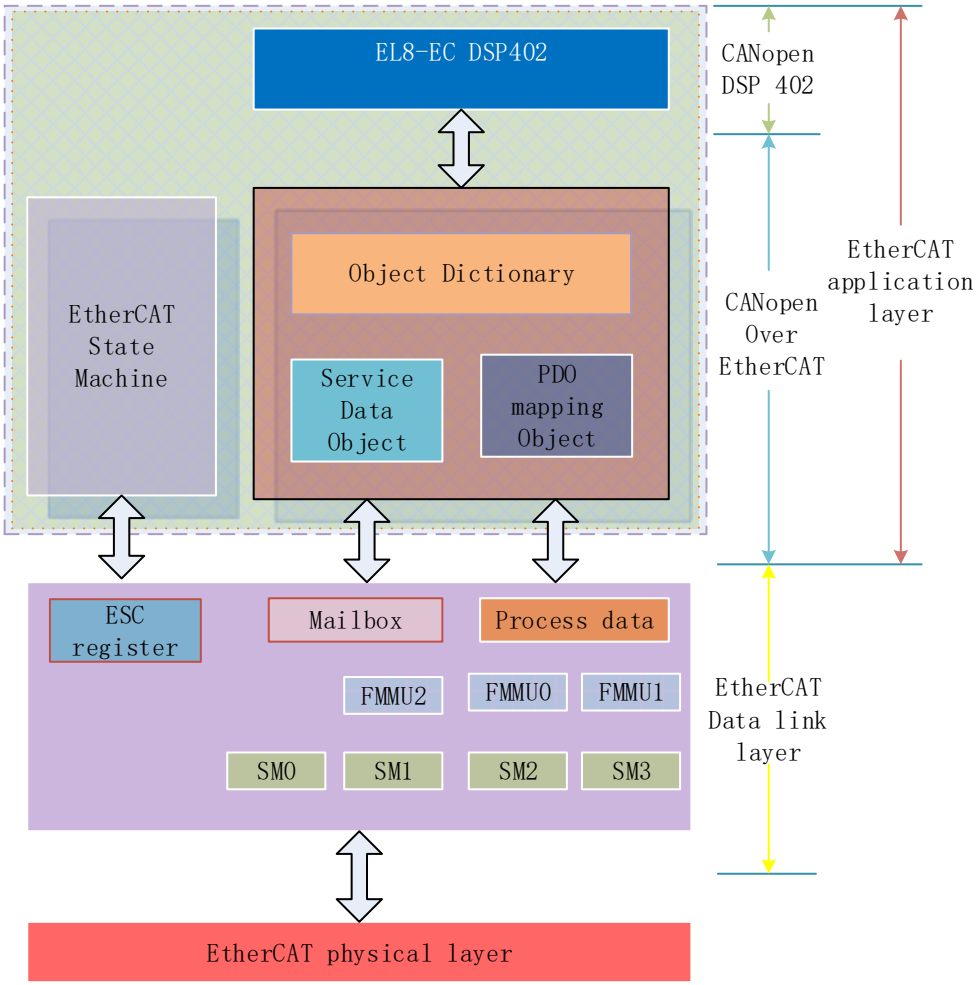


**Figure 7.4 Structure of ELD3-EC network module**

The data link layer is mainly implemented by EtherCAT slave station controller (ESC). ELD3-EC EtherCAT application layer protocol mainly includes application part (CANopen DSP402), object dictionary and communication function (red frame part), among which object dictionary and communication function can be jointly called CoE part.

**Object dictionary**——Bridge of communication function and application part.

**Communication function**——Implementation of communication rules (SDO, PDO, etc.)

**Application part**——Define the specific function of the device, such as the drive, IO module.

## 7.4.2 Object dictionary

EtherCAT master controls the ELD3-EC drive by writing and reading device state /information. To do this, the drive defines read-write parameters and read-only state values. Object dictionary is the collection of these parameters and states.
The ELD3-EC object dictionary contains all DSP402 and CoE related data objects in a standardized manner. It is a collection of ELD3-EC parameter data structures.
The ELD3-EC object dictionary is the interface with which the controller communicates. EtherCAT master implements ELD3-EC motion control through the interface of object dictionary.

## 7.4.3 Service Data Object (SDO)

The ELD3-EC series supports SDO services. EtherCAT master can configure, monitor and control ELD3-EC servos by using SDO to read and write ELD3-EC object dictionaries. In conventional CANopen DS301 mode, SDO protocol CAN only transfer 8 bytes at a time to match the data length of CAN message. In COE enhancement mode, only the payload data is expanded without changing the protocol head; In this way, the SDO protocol uses mailboxes with larger data lengths, thus improving the transmission efficiency of big data.

## 7.4.4 Process Data Object (PDO)

### PDO Introduction

PDO is generally used for real-time data updates. It is divided into receiving PDO (RXPDO) and sending PDO (TXPDO). The data stream direction of receiving PDO is from master station to slave station, while sending PDO is from slave station to master station
The PDO function of ELD3-EC supports both synchronous cycle mode and non-periodic update mode. When distributed clock synchronization mode is selected on master station, PDO will update according to the synchronization cycle. If free moving mode is selected, PDO data updates aperiodic.

### PDO mapping

Through PDO mapping, the real-time transmission of mapped objects can be realized. ELD3-EC supports simultaneous transmission of 2 sets of RXPDO and 2 sets of TXPDO. Each PDO object can map up to 8 object dictionary (maximum length 32 bytes). The format of PDO mapping content is shown in table 7.2

**Table 7.2 Format of PDO mapping**

| **Bit** | 31~16 | 15~8 | 7~0 |
|---|---|---|---|
| **Description** | Index of mapped object | Subindex of mapped object | Bit length (Hex) |
| **Example** | 6040h | 00h | 10h(16bit) |

Default PDO mapping (consistent with the XML file) is shown in table 7.3

**Table 7.3 Default PDO mapping**

| PDO Map object index | PDO Map object Sub-index | Mapping content | Mapped Object | | | Description |
|---|---|---|---|---|---|---|
| | | | Index | Sub-index | Bit length | |
| RXPDO1 (1600h) | 01h | 60400010h | | 00h | 10h(16 bit) | 01h |
| | 02h | 607A0020h | | 00h | 10h(16 bit) | 02h |
| | 03h | 60B80020h | | 00h | | 03h |
| | | | | | | |
| RXPDO2 (1601h) | 01h | 60400010h | 6040h | 00h | 10h(16 bit) | Control word |
| | 02h | 60FF0020h | 60FFh | 00h | 20h(32 bit) | Target velocity |
| | 03h | 60B20010h | 60B2h | 00h | 10h(16 bit) | Torque feedforward |
| RXPDO3 (1602h) | 01h | 60400010h | 6040h | 00h | 10h(16 bit) | Control word |
| | 02h | 60710010h | 6071h | 00h | 10h(16 bit) | Target torque |
| | 03h | 60870020h | 6084h | 00h | 20h(32 bit) | Profile deceleration |
| RXPDO4 (1603h) | 01h | 60400010h | 6040h | 00h | 10h(16 bit) | Control word |
| | 02h | 60980008h | 6098h | 00h | 08h(8 bit) | Homing method |
| | 03h | 60990120h | 6099h | 01h | 20h(32 bit) | High homing velocity |
| | 04h | 60990220h | 6099h | 02h | 20h(32 bit) | Low homing velocity |
| | 05h | 609A0020h | 609Ah | 00h | 20h(32 bit) | Homing acceleration |
| | 06h | 607C0020h | 607Ch | 00h | 20h(32 bit) | Homing position offset |
| | 07h | 60600008h | 6060h | 00h | 08h(8 bit) | Operation mode |
| TXPDO1 (1A00h) | 01h | 603F0000h | | | | |
| | 02h | 60410000h | | | | |
| | 03h | 60610000h | | | | |
| | 04h | 60640000h | | | | |
| | 05h | 60B90020h | | | | |
| | 06h | 60BA0020h | | | | |
| | 07h | 60FD0020h | | | | |
| TXPDO2 (1A01h) | No default mapping | | | | | |

## PDO dynamic mapping

Different from CIA DS301, CoE uses PDO specified objects (1C12h/1C13h) to configure PDO mapped objects (1600h~1603h/1A00h~1A01h) to PDO SyncManager (SyncManager 2/3). PDO specified objects are defined in table 7.4

**Table 7.4 PDO specifies object definitions**

| Index | Sub-index | Range | Data type | Access |
|---|---|---|---|---|
| RXPDO (1C12h) | 00h | 0~4 | U8*1) | RO *2) |
| | 01h | 1600h~1603h | U16 | RW |
| | 02h | | U16 | RW |
| | 03h | | U16 | RW |
| | 04h | | U16 | RW |
| TXPDO (1C13h) | 00h | 0~2 | U8 | RO |
| | 01h | 1A00h~1A01h | U16 | RW |
| | 02h | | U16 | RW |

*** 1) U represents unsigned type, such as U8 for unsigned 8 bits and U16 for unsigned 16 bits*

*2) Access: RO = Read Only, RW = Read and Write, WO = Write Only*

## PDO dynamic mapping setup procedure

B、 Switch EtherCAT state machine to pre-operational, then PDO map can be configured using SDO.

C、 Clear the PDO mapping object of the PDO specified object by setting 1C12-00h / 1C13-00h to 0.

D、 Invalidate the PDO mapping object by assigning 0 to the subindex 0 of 1600h~1603h /1A00h~1A01h.

E、 Reconfigure PDO mapping content and write the mapping object into the objects in the range of 1600-01h~1600-08h, 1601-01h~1601-08h, 1602-01h~1602-08h, 03-01h~1603-08h (RXPDO mapping content as from 1600h-01), 00-01h ~ 1A00-08h or 1A01-01h~1A01-08h (TXPDO mapping content as from 1A00h-01) according to Table 6.3

F、 Set the total number of PDO mapping objects by writing the number of mapping objects into 1600-00h, 1601-00h, 1602-00h, 1603-00h, 1A00-00h or 1A01-00h. The total number of PDO mapping objects without mapping content will be set to 0.

G、 Write valid PDO mapping object index to PDO specified object by writing valid RXPDO mapping object index 1600h~1603h into 1C12-01h ~ 1C12-04h and writing valid TXPDO mapping object index 1A00h, 1A01h into 1C13-01h, 1C13-02h.

H、 Set the total number PDO specified objects by writing the number of mapped objects to 1C12-00h and 1C13-00h.

I、 Switch EtherCAT state to Safe-Operational or above, the configured PDO mapping will be valid.

## 7.5 Network status display

The network connection status is determined by the LED light on CN4 and CN5 port.

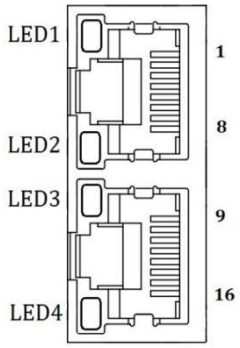


①LED1: Link/Activity IN status，Green.
②LED3: Link/Activity OUT status，Green.
③LED2: RUN status，Green.  EtherCAT state machine.
④LED4: ERR statue，Red.

**Figure 7.6 CN3 and CN4 port**

**Table 7.5 LED Indicator**

| Label | Color | Status | Description |
|---|---|---|---|
| RUN | Green | （OFF） | Init |
| | | (Blinking) | Pre-Operational |
| | | (Single flash) | Safe-Operational |
| | | (ON) | Operational |
| ERR | Red | (OFF) | *Refer to chapter 4.3 for more details* |
| | | (Blinking) | |
| | | (Single flash) | |
| | | (Double flash) | |
| | | (Flickering) | |
| | | (ON) | |
| L/A IN | Green | (OFF) | Physical layer link not established |
| | | (ON) | Physical layer link established |
| | | (Flickering) | Interactive data after link established |
| L/A OUT | Green | (OFF) | Physical layer link not established |
| | | (ON) | Physical layer link established |
| | | (Flickering) | Interactive data after link established |

**Status description of CN3 & CN4 indicator light is shown in figure 7.7**

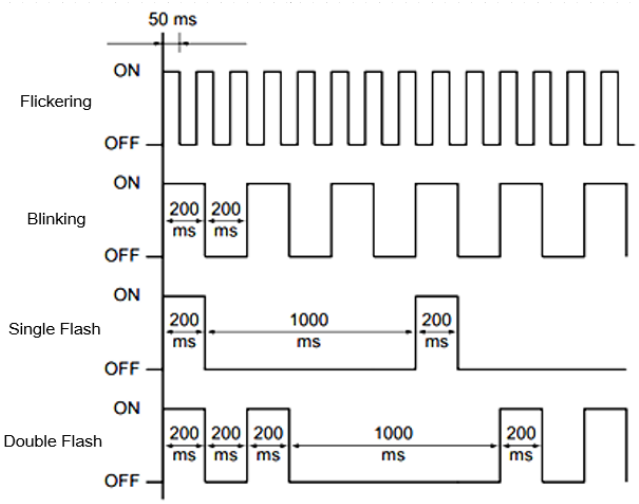

# Chapter 8 Warning and Alarm

## 8.1 Servo drive warning

When warning occurs, driver will set protective function but **motor won't stop moving**. Error code will be displayed on the front panel.

| Warning Code | | Content |
|---|---|---|
| Main | Code | |
| A0 | 1 | Overload warning |
| | 2 | Regeneration energy overload warning(**85% of the regeneration threshold**) |
| | 3 | Absolute encoder **battery voltage low (<3.1V)**. Valid when P00.15 is set to 1. |
| | 4 | Change the parameter to a non-real time valid warning |
| | 7 | Low temperature warning **( < 20℃)** |
| | 8 | Positive limit switch valid. **POT** blinking on front panel |
| | 9 | Negative limit switch valid. **NOT** blinking on front panel |
| | A | Positive and negative limit switch valid. **PNOT** blinking on front panel |
| | B | Current position is beyond software positive limit. **SPOT** blinking on front panel |
| | C | Current position is beyond software negative limit. **NPOT** blinking on front panel |
| | D | Current position is beyond software negative, positive limit. **SPNOT** blinking on front panel |
| | E | Parameters reset to factory default. Restart needed |

## 8.2 Servo drive alarm

When alarm occurs, driver will set protective function and **motor stops moving**. Alarm history record can also be viewed in data monitoring mode

**Table 8.1 Error Code List**

| Error code | | Content | Attribute | | |
|---|---|---|---|---|---|
| Main | Sub | | Save | Type | Clearable |
| 09 | 0~F | FPGA communication error | ● | 2 | |
| 0A | 0~1 | Circuit current detection error | ● | 2 | |
| | 2 , 4 | Analog input error | ● | 2 | |
| | 3 | Motor power cable not connected | ● | 1 | |

| | | | | | |
|---|---|---|---|---|---|
| | 5 | DC bus error | ● | 2 | |
| | 6 | Temperature measuring error | ● | 2 | |
| 0b | 0 | Control circuit power supply voltage too low | | 2 | |
| | 1 | Control circuit power supply voltage too high | | 2 | ● |
| 0c | 0 | DC bus overvoltage | ● | 1 | ● |
| 0d | 0 | DC bus undervoltage | ● | 1 | ● |
| | 1 | Single phasing of main power supply | ● | 2 | |
| | 2 | No main power supply detected | | 2 | |
| 0E | 0 | Overcurrent | ● | 1 | |
| | 1 | Intelligent Power Module (IPM) overcurrent | ● | 1 | |
| | 2 | Power output to motor shorted to ground | ● | 1 | |
| | 4 | Phase overcurrent | ● | 1 | |
| 0F | 0 | Driver overheated | ● | 2 | |
| 10 | 0 | Motor overloaded | ● | 1 | ● |
| | 1 | Driver overloaded | ● | 1 | ● |
| | 2 | Motor rotor blocked | ● | 1 | ● |
| 12 | 0 | Regenerative resistor overvoltage | ● | 2 | |
| | 1 | Holding brake error | ● | 1 | |
| | 2 | Regenerative resistor value too low | ● | 2 | |
| 15 | 0 | Encoder disconnected | ● | 1 | |
| | 1 | Encoder communication error | ● | 1 | |
| | 2 | Encoder initial position error | ● | 1 | |
| | 3 | Multiturn encoder error | ● | 2 | |
| | 4 | Encoder parameter settings error | ● | 2 | |
| | 5 | Encoder data overflow | ● | 2 | ● |
| | 6 | Encoder overheated | ● | 2 | ● |
| | 7 | Encoder counter error | ● | 2 | ● |
| 17 | 0 | Encoder data error | ● | 1 | |
| | 1 | Encoder parameter initialization error | ● | 1 | |
| 18 | 0 | Excessive position deviation | ● | 2 | ● |
| | 1 | Excessive velocity deviation | ● | 2 | ● |
| 19 | 0 | Motor vibration too strong | ● | 2 | ● |
| | 1 | Excessive hybrid position deviation | ● | 1 | ● |
| 1A | 0 | Overspeed | ● | 2 | ● |
| | 1 | Velocity out of control | ● | 1 | ● |
| 1b | 0 | Bus input signal dithering | ● | 2 | ● |
| | 1 | Incorrect electronic gear ratio | ● | 2 | ● |
| | 3 | External encoder frequency divider parameter error | ● | 1 | |
| | 4 | Excessive synchronous position command | ● | 2 | ● |
| 1c | 0 | Both STO failed | ● | 1 | ● |
| | 1 | 1st STO failed | ● | 1 | ● |
| | 2 | 2nd STO failed | ● | 1 | ● |

| | | | | | |
|---|---|---|---|---|---|
| | 3 | STO power supply 3.3v anomaly | | 2 | |
| | 4 | STO power supply 5.0v anomaly | | 2 | |
| | 5~8 | Faulty STO internal optocoupler, inverter | | 2 | |
| 21 | 0 | I/O input interface assignment error | ● | 2 | |
| | 1 | I/O input interface function assignment error | ● | 2 | |
| | 2 | I/O output interface function assignment error | ● | 2 | |
| 24 | 0 | CRC correction during EEPROM parameter saving | | 2 | |
| | 1 | I2C communication status error | | 2 | |
| | 2 | Error r/w alarm history record | | 2 | |
| | 3 | Error r/w diagnostic data | | 2 | |
| | 4 | Error r/w 402 parameters | | 2 | |
| | 5 | Error r/w communication parameters | | 2 | |
| 25 | 0 | Gantry deviation error | | | |
| | 1 | Gantry communication error | | | |
| 26 | 0 | Positive/Negative position limit triggered under non-homing mode | ● | 2 | ● |
| 27 | 0 | Analog 1 input overrun limit | ● | 2 | ● |
| | 1 | Analog 2 input overrun limit | ● | 2 | ● |
| | 2 | Analog 3 input overrun limit | ● | 2 | ● |
| 29 | 0 | Control mode not match under full closed loop mode | ● | 1 | |
| | 1 | Encoder mode not match under full closed loop mode | ● | 1 | |
| 55 | 0 | External ABZ encoder disconnected | ● | 1 | |
| | 1 | External ABZ encoder Phase A disconnected | ● | 1 | |
| | 2 | External ABZ encoder Phase B disconnected | ● | 1 | |
| | 3 | External ABZ encoder Phase Z disconnected | ● | 1 | |
| 57 | 0 | Forced alarm input valid(E-stop) | ● | 2 | ● |
| 5F | 0 | Motor model no. detection error | | 2 | |
| | 1 | Driver power module detection error | | 2 | |
| 60 | 0 | Main loop interrupted timeout | | 2 | |
| | 1 | Velocity loop interrupted timeout | | 2 | |
| 70 | 0 | Encryption error | | 2 | |
| 89 | 0 | Homing error | | 2 | ● |
| 92 | 0 | External encoder parameter initialization error | ● | 1 | |

**Save:** Save error messages to alarm history.

**Type**: The type 1 and type 2 fault stop mode can be set via P05.10 [Sequence at alarm].

Table 8.2 Alarm and 603F correspondence

| Error Code Display | 1001 h | 603Fh | ETG Code | Alarm Description |
|---|---|---|---|---|
| Er 0A0 | 0x04 | 0x3150 | | Phase A circuit current detection error |
| Er 0A1 | 0x04 | 0x3151 | | Phase B circuit current detection error |
| Er 0A3 | 0x04 | 0x3153 | | Motor power cable not connected |
| Er 0b0 | | | | Control circuit power supply voltage too low |
| Er 0b1 | 0x04 | 0x3206 | | Control power supply voltage too high |
| Er 0C0 | 0x04 | 0x3211 | | DC bus overvoltage |
| Er 0d0 | 0x04 | 0x3221 | | DC bus undervoltage |
| Er 0d1 | 0x04 | 0x3130 | | Single phasing of main power supply |
| Er 0d2 | 0x04 | 0x3222 | | No main power supply detected |
| Er 0E0 | 0x02 | 0x2211 | | Overcurrent |
| Er 0E1 | 0x02 | 0x2212 | | Intelligent Power Module (IPM) overcurrent |
| Er 0E2 | 0x02 | 0x2218 | | Power output to motor shorted to ground |
| Er 0E4 | 0x02 | 0x2230 | | Phase overcurrent |
| Er 0f0 | 0x08 | 0x4210 | | Driver overheated |
| Er 100 | 0x02 | 0x8311 | | Motor overloaded |
| Er 101 | 0x02 | 0x8310 | | Driver overloaded |
| Er 102 | 0x02 | 0x8301 | | Motor rotor blocked |
| Er 120 | 0x80 | 0x7701 | | Regenerative resistor overvoltage |
| Er 121 | 0x80 | 0x7702 | | Holding brake error |
| Er 122 | 0x80 | 0x7703 | | Regenerative resistor value too low |
| Er 150 | 0x80 | 0x7321 | | Encoder disconnected |
| Er 151 | 0x80 | 0x7322 | | Encoder communication error |
| Er 152 | 0x80 | 0x7323 | | Encoder initial position error |
| Er 153/Er 154 | 0x80 | 0x7325 | | Multiturn encoder error / Encoder parameter settings error |
| Er 155 | 0x80 | 0x7326 | | Encoder data overflow |
| Er 156 | 0x80 | 0x7327 | | Encoder overheated |
| Er 157 | 0x80 | 0x7328 | | Encoder count error |
| Er 170 | 0x80 | 0x7324 | | Encoder data error |
| Er 171 | 0x80 | 0x7325 | | Encoder parameter initialization error |
| Er 180 | 0x20 | 0x 8611 | | Excessive position deviation |
| Er 181 | | | | Excessive velocity deviation |
| Er 190 | 0x20 | 0x 8401 | | Motor vibration too strong |
| Er 1A0 | 0x20 | 0x 8402 | | Overspeed |
| Er 1A1 | 0x20 | 0x 8403 | | Velocity out of control |
| Er 1b0 | 0x20 | 0x | | Bus input signal dithering |

| | | | | |
|---|---|---|---|---|
| | | 8612 | | |
| Er 1b1 | 0x20 | 0x 8503 | | Incorrect electronic gear ratio |
| Er 1c0 | 0x02 | 8313 | | Both STO failed |
| Er 1c1 | 0x02 | 8313 | | 1st STO failed |
| Er 1c2 | 0x02 | 8313 | | 2nd STO failed |
| Er 210 | 0x80 | 0x6321 | | I/O input interface assignment error |
| Er 211 | 0x80 | 0x6322 | | I/O input interface function assignment error |
| Er 212 | 0x80 | 0x6323 | | I/O output interface function assignment error |
| Er 240 | 0x80 | 0x5530 | | EEPROM parameters initialization error |
| Er 241 | 0x80 | 0x5531 | | EEPROM hardware error |
| Er 242 | 0x80 | 0x5532 | | Error saving alarm history record |
| Er 243 | 0x80 | 0x5533 | | Error occurred when saving vendor parameters |
| Er 244 | 0x80 | 0x5534 | | Error occurred when saving communication parameters |
| Er 245 | 0x80 | 0x5535 | | Error occurred when saving parameter 402 |
| Er 246 | 0x80 | 0x5536 | | Data saving error during power-off |
| Er 260 | 0x80 | 0x7329 | | Positive/Negative position limit triggered under non-homing mode |
| Er 270 | | | | Analog 1 input overrun limit |
| Er 271 | | | | Analog 2 input overrun limit |
| Er 280 | 0x80 | 0x7201 | | Output pulse frequency too high |
| Er 570 | 0x80 | 0x5441 | | Forced alarm input valid |
| Er 5f0 | 0x80 | 0x7122 | | Motor model no. detection error |
| Er 5f1 | 0x80 | 0x1100 | | Driver power module detection error |
| Er 600 | 0x80 | 0x6204 | | Main loop interrupted timeout |
| Er 601 | 0x80 | 0x6204 | | Velocity loop interrupted timeout |
| Er 700 | 0x80 | 0x7001 | | Encryption error |
| Er 73A | 0x10 | 0x873A | | SyncManager2 lost |
| Er 73b | 0x10 | 0x873B | | SYNC0 lost |
| Er 73c | 0x10 | 0x873 C | | Excessive Distributed Clock error |
| Er 801 | 0x10 | 0x8201 | 0x0001 | Unknown communication error |
| Er 802 | 0x80 | 0x5510 | 0x0002 | Memory overflow |
| Er 803 | 0x80 | 0x5511 | | RAM out of bound |
| Er 805 | 0x80 | 0x6202 | | FOE firmware upgrade failed |
| Er 806 | 0x80 | 0x6201 | | Saved ESI file does not match driver firmware |
| Er 811 | 0x10 | 0xA001 | 0x0011 | Invalid EtherCAT transition request |
| Er 812 | 0x10 | 0xA002 | 0x0012 | Unknown EtherCAT state machine transition request |
| Er 813 | 0x10 | 0x8213 | 0x0013 | Protection request from boot state |
| Er 814 | 0x80 | 0x6203 | | Invalid firmware |

| | | | | |
|---|---|---|---|---|
| Er 815 | 0x10 | 0x8215 | 0x0015 | Invalid mailbox configuration under boot state |
| Er 816 | 0x10 | 0x8216 | 0x0016 | Pre-Op status is invalid for the mailbox configuration |
| Er 817 | 0x10 | 0x8217 | | Invalid SyncManager configuration |
| Er 818 | 0x10 | 0x8211 | | No valid input data |
| Er 819 | 0x10 | 0x8212 | | No valid output data |
| Er 81A | 0x10 | 0xFF02 | 0x871A | Synchronization error |
| Er 81b | 0x10 | 0x821B | 0x001B | SyncManager2 watchdog timer timeout |
| Er 81C | 0x10 | 0x821C | 0x001C | Invalid SyncManager type |
| Er 81d | 0x10 | 0x821D | 0x001D | Invalid output configuration |
| Er 81E | 0x10 | 0x821E | 0x001E | Invalid input configuration |
| Er 81f | 0x10 | 0x821F | | Watchdog configuration invalid |
| Er 821 | 0x10 | 0xA003 | 0x0021 | Waiting for EtherCAT state machine Init state |
| Er 822 | 0x10 | 0xA004 | 0x0022 | Waiting for the EtherCAT state machine Pre-Op state |
| Er 823 | 0x10 | 0xA005 | 0x0023 | Waiting for master device for Safe-Op request |
| Er 824 | 0x10 | 0x8224 | 0x0024 | Invalid process data input mapping |
| Er 825 | 0x10 | 0x8225 | 0x0025 | RPDO mapping invalid (length, parameter not present, no this property) |
| Er 827 | 0x10 | 0x8227 | | Free running mode is not supported |
| Er 828 | 0x10 | 0x8228 | | Sync mode not supported |
| Er 82b | 0x10 | 0x8210 | 0x002B | Invalid inputs and outputs |
| Er 82C | 0x10 | 0x872C | 0x002C | Fatal synchronization error |
| Er 82d | 0x10 | 0x872D | 0x002D | No synchronization error |
| Er 82E | 0x10 | 0x872E | 0x002E | Synchronization cycle time is too short |
| Er 830 | 0x10 | 0x8730 | 0x0030 | Invalid Distributed Clock synchronization settings |
| Er 832 | 0x10 | 0x8732 | 0x0032 | Distribution Clock phase-locked loop failure |
| Er 833 | 0x10 | 0x8733 | | DC sync IO error |
| Er 834 | 0x10 | 0x8734 | | DC sync timeout |
| Er 835 | 0x10 | 0x8735 | | Distribution Clock cycle time is invalid |
| Er 836 | 0x10 | 0x8736 | 0x0036 | Invalid Distribution Clock synchronization cycle time |
| Er 850 | 0x80 | 0x5550 | 0x0050 | EEPROM is inaccessible |

| | | | | |
|---|---|---|---|---|
| Er 851 | 0x80 | 0x5551 | 0x0051 | EEPROM error |
| Er 852 | 0x80 | 0x5552 | 0x0052 | Hardware is not ready |
| Er 860 | 0x80 | 0xFF01 | | EtherCAT frame lost per unit time exceeds limit |
| Er 870 | 0x80 | 0x5201 | | Driver can’t be enabled under current control mode |
| Er 890 | 0x80 | 0x8614 | | Homing error |

## 8.3 Alarm Handling

***When error occurs, please solve accordingly. Then, restart. If the solutions described don't work, please consider replacing the driver.*

| **Error code** | Main | Sub | **Display:** "Er 090"--"Er 09F" |
|---|---|---|---|
| | 09 | 0~F | **Content:** FPGA communication error |

| Cause | Diagnosis | Solution |
|---|---|---|
| L1, L2 terminal voltage too low | Verify L1, L2 terminal voltage | Make sure L1, L2 terminal voltage is within recommended range |

| **Error code** | Main | Sub | **Display:** "Er 0A0"--"Er 0A1" |
|---|---|---|---|
| | 0A | 0~1 | **Content:** Circuit current detection error |

| Cause | Diagnosis | Solution |
|---|---|---|
| Motor power cable wiring error | Verify motor power cable wiring | Make sure U,V,W terminal wired properly |
| Main power supply undervoltage | Verify L1,L2,L3 terminal voltage | Increase main power supply voltage |

| **Error code** | Main | Sub | **Display:** "Er 0A2" / "Er 0A4" |
|---|---|---|---|
| | 0A | 2 / 4 | **Content:** Analog input error |

| Cause | Diagnosis | Solution |
|---|---|---|
| Analog input wiring error | Verify analog input wiring | Make sure of analog input wiring connection |

| **Error code** | Main | Sub | **Display:** "Er 0A3" |
|---|---|---|---|
| | 0A | 3 | **Content:** Motor power cable not connected |

| Cause | Diagnosis | Solution |
|---|---|---|
| Motor power cable not connected | Verify motor power cable wiring | Measure **resistance values between U, V, W terminals**, make sure the values are almost equal. If not, might be due to damaged motor or motor winding open circuit. |
| Motor fault | / | Replace motor |

| Error code | Main | Sub | Display: "Er 0A5" | |
|---|---|---|---|---|
| | 0A | 5 | Content: DC Bus error | |
| Cause | | | Diagnosis | Solution |
| L1, L2 terminal voltage too low | | | Verify L1, L2 terminal voltage. Check if power on indicator light on servo drive is on and d27 DC bus voltage. | Make sure L1, L2 terminal voltage is within recommended range |

| Error code | Main | Sub | Display: "Er 0A6" | |
|---|---|---|---|---|
| | 0A | 6 | Content: Temperature measuring error | |
| Cause | | | Diagnosis | Solution |
| L1, L2 terminal voltage too low | | | Verify L1, L2 terminal voltage | Make sure L1, L2 terminal voltage is within recommended range |

| Error code | Main | Sub | Display: "Er 0b0" | |
|---|---|---|---|---|
| | 0b | 0 | Content: Control circuit power supply voltage too low | |
| Cause | | | Diagnosis | Solution |
| Control circuit power supply voltage too low | | | Verify L1C, L2C terminal voltage; check if wiring connection is tight | Increase L1C, L2C terminal voltage; Tighten L1C, L2C terminal connection |
| Power supply under capacity | | | / | Increase power supply capacity for L1C, L2C terminals |

| Error code | Main | Sub | Display: "Er 0b1" | |
|---|---|---|---|---|
| | 0b | 1 | Content: Control circuit power supply abnormal | |
| Cause | | | Diagnosis | Solution |
| USB power supply too low | | | Verify if USB cable is properly connected and not damaged. | Replace USB Type-C cable |

| Error code | Main | Sub | Display: "Er 0c0" | |
|---|---|---|---|---|
| | 0c | 0 | Content: DC bus overvoltage | |
| Cause | | | Diagnosis | Solution |
| Main power supply overvoltage | | | Verify L1,L2,L3 terminal voltage | Decrease main power supply voltage |
| Acceleration/deceleration time too short | | | Verify if the time is actually too short | Increase the duration time or change to a regenerative resistor with higher resistance. |
| Regenerative brake parameter anomaly | | | Verify P07.32/P07.33 | Modify vent overload parameter |
| Inner brake circuit damaged | | | / | Replace driver |

| Error code | Main | Sub | Display: "Er 0d0" | |
|---|---|---|---|---|
| | 0d | 0 | **Content**: DC bus undervoltage | |
| Cause | | | Diagnosis | Solution |
| Main power supply undervoltage | | | Verify L1,L2,L3 terminal voltage | Increase main power supply voltage |
| L1C, L2C connected when USB cable is connected | | | Control circuit power on before driver initialization. Alarm might occur. | Please disconnect the USB cable before powering on control circuit. |

| Error code | Main | Sub | Display: "Er 0d1" | |
|---|---|---|---|---|
| | 0d | 1 | **Content**: Single phasing of main power supply | |
| Cause | | | Diagnosis | Solution |
| Main power supply undervoltage | | | Verify L1,L2,L3 terminal voltage | Increase main power supply voltage |
| Main power supply wiring error | | | Loose connection of L1, L2, L3 | Secure connections |

| Error code | Main | Sub | Display: "Er 0d2" | |
|---|---|---|---|---|
| | 0d | 2 | **Content**: No main power supply detected | |
| Cause | | | Diagnosis | Solution |
| No main power supply | | | Verify L1,L2,L3 terminal voltage | 1. Increase main power supply voltage<br>2. Secure connections |

| Error code | Main | Sub | Display: "Er 0E0" | |
|---|---|---|---|---|
| | 0E | 0 | **Content:** Overcurrent | |
| Cause | | | Diagnosis | Solution |
| Driver power output short circuit | | | Verify if there is short circuit between UVW terminals, or shorted to PG. | 1. Make sure there is no circuit.<br>2. Make sure motor is not damaged |
| Motor wiring error | | | Verify motor wiring | Reconnect motor wiring |
| IGBT module short circuit | | | Disconnect motor output cable. Then, enable servo driver to check for overcurrent | Replace driver |
| Control parameter anomaly | | | Verify if parameter exceeds recommended range | Set parameter within recommended range. |
| Control command anomaly | | | Verify if command motion is too acute | Modify control command; use filter |

| Error code | Main | Sub | Display: "Er 0E1" | |
|---|---|---|---|---|
| | 0E | 1 | **Content**: Intelligent Power Module (IPM) overcurrent | |
| Cause | | | Diagnosis | Solution |
| Driver power output short circuit | | | Verify if there is short circuit between UVW terminals, or shorted to PG. | 1. Make sure there is no circuit.<br>2. Make sure motor is not damaged |
| Motor wiring error | | | Verify motor wiring | Reconnect motor wiring |
| IGBT module short circuit | | | Disconnect motor output cable. Then, enable servo driver to check for overcurrent | Replace driver |
| IGBT module undervoltage | | | / | Replace driver |
| Control parameter anomaly | | | Verify if parameter exceeds recommended range | Set parameter within recommended range. |
| Control command anomaly | | | Verify if command motion is too acute | Modify control command; use filter |

| Error code | Main | Sub | Display: "Er 0E2" | |
|---|---|---|---|---|
| | 0E | 2 | **Content**: Power output to motor shorted to ground | |
| Cause | | | Diagnosis | Solution |
| Driver U, V, W terminals shorted to ground | | | Disconnect motor power cable and check for short circuit between driver UVW and PE | 1. Reconnect wiring.<br>2. Change motor power cable. |
| Motor shorted to ground | | | Connect motor power cable to driver power output. Verify if resistance value of UVW to PE is in the range of MegaOhm (MΩ) | Replace motor |

| Error code | Main | Sub | Display: "Er 0E4" | |
|---|---|---|---|---|
| | 0E | 2 | **Content**: Phase overcurrent | |
| Cause | | | Diagnosis | Solution |
| Driver U, V, W terminals shorted to ground | | | Disconnect motor power cable and check for short circuit between driver UVW and PE | 1. Reconnect wiring.<br>2. Change motor power cable. |
| Motor shorted to ground | | | Connect motor power cable to driver power output. Verify if resistance value of UVW to PE is equal and if there is short circuit | Replace motor |

| Error code | Main | Sub | Display: "Er 0F0" |
|---|---|---|---|
| | 0F | 0 | **Content**: Driver overheated |

| Cause | Diagnosis | Solution |
|---|---|---|
| Temperature of power module exceeded upper limit | Measure the temperature of driver radiator. | 1. Improve cooling condition. Please check installation guide;<br>2. Replace driver and motor with higher power rating;<br>3. Increase duration time for acceleration and deceleration;<br>4. Decrease load |

| Error code | Main | Sub | Display: "Er 100" |
|---|---|---|---|
| | 10 | 0 | **Content:** Motor overloaded |

| Cause | Diagnosis | Solution |
|---|---|---|
| Load too heavy | Verify if actual load exceeds maximum value allowed | 1. Decrease load<br>2. Adjust limit values |
| Strong mechanical vibration | Look for mechanical vibration from machine system | 1. Adjust gain value of control loop<br>2. Increase duration time for acceleration and deceleration |
| Motor or encoder cable wiring error | Verify motor and encoder wiring | 1. Reconnect wiring<br>2. Replace motor and encoder cable |
| Holding brake engaged | Verify holding brake terminal voltage | Cut off holding brake |

| Error code | Main | Sub | Display: "Er 101" |
|---|---|---|---|
| | 10 | 1 | **Content:** Driver overloaded |

| Cause | Diagnosis | Solution |
|---|---|---|
| Motor power cable wiring error | UVW terminals wiring error | Make sure motor power cable wiring connection is correct |
| Motor not matched | Motor current is too high | Motor rated current is higher than driver rated current. Please change to a driver with higher rated current. |

| Error code | Main | Sub | Display: "Er 102" |
|---|---|---|---|
| | 10 | 2 | **Content:** Motor rotor blocked |

| Cause | Diagnosis | Solution |
|---|---|---|
| Motor rotor blocked | Look for mechanical blockages | Check the machinery |
| Motor rotor blocking time threshold value too low | Verify value of P06.57 | Adjust value of P06.57 |

| Error code | Main | Sub | Display: "Er 120" | |
|---|---|---|---|---|
| | 12 | 0 | Content: Regenerative resistor overvoltage | |
| Cause | | | Diagnosis | Solution |
| Regenerative energy exceeded capacity of regenerative resistor | | | 1. Verify if velocity is too high<br>2. Verify if load is too large | 1. Decrease motor rotational velocity;<br>2. Decrease load inertia;<br>3. Add an external regenerative resistor; |
| Power supply voltage too high | | | 1. Verify if power supply voltage is within the rated range.<br>2. Interval regenerative resistor value is too low | 1. Decrease power supply voltage<br>2. Increase regeneration resistance value(add external regenerative resistor) |
| Unstable power supply voltage | | | Verify if power supply voltage is stable | Add a surge suppressor to main power supply. |
| Regenerative energy discharge circuit damaged | | | / | 1. Add an external regenerative resistor;<br>2. Replace driver |

| Error code | Main | Sub | Display: "Er 121" | |
|---|---|---|---|---|
| | 12 | 1 | Content: Holding brake error | |
| Cause | | | Diagnosis | Solution |
| Holding brake circuit damaged | | | Regenerative resistor disconnected | Replace regenerative resistor |
| | | | Holding brake IGBT damaged | Replace driver |

| Error code | Main | Sub | Display: "Er 122" | |
|---|---|---|---|---|
| | 12 | 2 | Content: Regenerative resistor value too low | |
| Cause | | | Diagnosis | Solution |
| External regenerative resistor value is less than the minimum value allowed by the drive | | | / | Replace the regenerative resistor with the right resistance value which meets the specification of the driver |

| Error code | Main | Sub | Display: "Er 150" | |
|---|---|---|---|---|
| | 15 | 0 | Content: Encoder disconnected | |
| Cause | | | Diagnosis | Solution |
| Encoder cable disconnected | | | Verify encoder cable connection | Make sure encoder cable properly connected |
| Encoder cable wiring error | | | Verify if encoder wiring is correct | Reconnect encoder wiring |
| Encoder damaged | | | / | Replace motor |
| Encoder measuring circuit damaged | | | / | Replace driver |

| **Error code** | Main | Sub | **Display:** "Er 151" | |
|---|---|---|---|---|
| | 15 | 1 | **Content:** Encoder communication error | |
| Cause | | | Diagnosis | Solution |
| Encoder wire shielding layer is missing | | | Verify if encoder cable has shielding layer | Replace with standard encoder cable |
| Encoder cable wiring error | | | Verify if encoder wiring is correct | Reconnect encoder wiring |
| Encoder damaged | | | / | Replace motor |

| **Error code** | Main | Sub | **Display:** "Er 152" | |
|---|---|---|---|---|
| | 15 | 2 | **Content:** Encoder initial position error | |
| Cause | | | Diagnosis | Solution |
| Communication data abnormal | | | 1. Verify if encoder power supply voltage is DC5V±5% ;<br>2. Verify if encoder cable and shielded layer is not damaged;<br>3. Verify if encoder cable is close to high-powered power supply cable | 1. Make sure encoder power supply voltage is stable<br>2. Make sure encoder cable is not damaged.<br>3. Make sure encoder cable shielded layer is grounded to frame<br>4. Make sure encoder cable is away from high-powered power supply cable |
| Encoder damaged | | | / | Replace motor |
| Encoder measuring circuit damaged | | | / | Replace driver |

| **Error code** | Main | Sub | **Display:** "Er 153" | |
|---|---|---|---|---|
| | 15 | 3 | **Content:** Multiturn encoder error | |
| Cause | | | Diagnosis | Solution |
| Initial use | | | Origin calibration not performed | Perform origin positioning and multiturn position initialization, calibrate the origin of coordinate system. |
| Encoder without multiturn absolute function used | | | Verify if encoder has multiturn absolute function | 1. Replace the motor with a multiturn absolute encoder.<br>2. Set P00.15 = 0 to deactivate multiturn absolute function. |
| Low battery power | | | Replace battery and restart driver to clear alarm | Replace battery |
| Battery has no power or has been dismantled | | | Alarm not cleared after replacing battery and restart | Absolute position lost. Return to origin and perform multiturn initialization, calibrate the origin of coordinate system |

| Error code | Main | Sub | Display: "Er 154" | |
|---|---|---|---|---|
| | 15 | 4 | Content: Encoder parameter settings error | |
| Cause | | | Diagnosis | Solution |
| Absolute encoder mode is incorrectly set. | | | Verify if encoder has multi-turn absolute value function. | Modify absolute encoder mode settings |

| Error code | Main | Sub | Display: "Er 155" | |
|---|---|---|---|---|
| | 15 | 5 | Content: Encoder data overflow | |
| Cause | | | Diagnosis | Solution |
| Encoder data overflow | | | Verify if encoder is not damaged | Initialize multiturn data |
| Absolute value applications, motor rotates in one direction | | | Verify if encoder is not damaged | Adjust absolute value application mode, set to turntable mode |

| Error code | Main | Sub | Display: "Er 156" | |
|---|---|---|---|---|
| | 15 | 6 | Content: Encoder overheated | |
| Cause | | | Diagnosis | Solution |
| The encoder temperature is too high. | | | Verify if motor temperature is too high | Reduce encoder temperature. |

| Error code | Main | Sub | Display: "Er 157" | |
|---|---|---|---|---|
| | 15 | 7 | Content: Encoder counter error | |
| Cause | | | Diagnosis | Solution |
| Encoder data overflow | | | Verify if encoder is not damaged | Initialize multiturn data |
| Absolute value applications, motor rotates in one direction | | | Verify if encoder is not damaged | Adjust absolute value application mode, set to turntable mode |

| Error code | Main | Sub | Display: "Er 170" | |
|---|---|---|---|---|
| | 17 | 0 | Content: Encoder data error | |
| Cause | | | Diagnosis | Solution |
| Communication data abnormal | | | 1. Verify if encoder power supply voltage is DC5V±5% ;<br>2. Verify if encoder cable and shielded layer is not damaged;<br>3. Verify if encoder cable is close to high-powered power supply cable | 1. Make sure encoder power supply voltage is stable<br>2. Make sure encoder cable is not damaged.<br>3. Make sure encoder cable shielded layer is grounded to frame<br>4. Make sure encoder cable is away from high-powered power supply cable |
| Encoder damaged | | | / | Replace motor |
| Encoder measuring circuit damaged | | | / | Replace driver |

| Error code | Main | Sub | Display: "Er 171" |
|---|---|---|---|
| | 17 | 1 | **Content:** Encoder parameter initialization error |

| Cause | Diagnosis | Solution |
|---|---|---|
| Driver and motor not matched | Verify driver and motor models. | Replace with matching driver and motor |
| Error while getting parameters from encoder | 1. Verify if encoder cable is standard.<br>2. Verify if encoder has no peeled insulator, broken connection or improper contact. | Use standard encoder cable, verify the connection of both sides of driver and motor, change encoder cable if necessary |

| Error code | Main | Sub | Display: "Er 180" |
|---|---|---|---|
| | 18 | 0 | **Content:** Excessive position deviation |

| Cause | Diagnosis | Solution |
|---|---|---|
| Improper position deviation settings | Verify if value of P0.014 is too low | Increase value of P0.014 |
| Position gain setting too low | Verify if values of P01.00 & P01.05 are too low | Increase values of P01.00 & P01.05 |
| Torque limit too low | Verify if values of P00.13 & P05.22 are too low | Increase values of P00.13 & P05.22 |
| Excessive external load | 1. Verify if acceleration and deceleration duration time is too low.<br>2. Verify if rotational velocity is too high<br>3. Verify if load is too large | 1. Increase duration time for acceleration and deceleration<br>2. Decrease rotational velocity<br>3. Decrease load |

| Error code | Main | Sub | Display: "Er 181" |
|---|---|---|---|
| | 18 | 1 | **Content:** Excessive velocity deviation |

| Cause | Diagnosis | Solution |
|---|---|---|
| Deviation between set velocity and actual velocity is too great | Verify if value of P06.02 is too low | 1. Increase value of P06.02;<br>2. Set P06.02 to 0, position error detection off. |
| Acceleration and deceleration duration time for set velocity is too low | Verify if value of P03.12 and P03.13 are too low | 1. Increase value of P03.12, P03.13;<br>2. Adjust velocity gain to reduce velocity lag error |

| Error code | Main | Sub | Display: "Er 190" |
|---|---|---|---|
| | 19 | 0 | **Content:** Vibration too strong |

| Cause | Diagnosis | Solution |
|---|---|---|
| Resonance | Mechanical stiffness is too high, resonance occurs | Reduce mechanical stiffness or use filter |
| Current loop gain too large | Verify current loop gain value | Reduce current loop gain |

| Error code | Main | Sub | Display: "Er 191" |
|---|---|---|---|
| | 19 | 1 | **Content:** Excessive hybrid position deviation |

| Cause | Diagnosis | Solution |
|---|---|---|
| Driver UVW terminal output single phasing or wiring error | Verify if UVW terminal wiring connection is right | Make sure UVW terminals are correctly connected to UVW of motor; change motor power cable. |
| Motor rotor blocked | Look for mechanical blockages | Check the machinery |
| Driver stiffness too low | Verify if position loop and velocity loop gain is too low | Increase position loop and velocity loop gain |
| Full closed loop position deviation (**Deviation between external encoder feedback position and motor feedback position**) exceeds P00.33 | Verify if P00.33 is set too low | Increase P00.33 set value accordingly but please aware that doing so might cause the position deviation to be higher. |

| Error code | Main | Sub | Display: "Er 1A0" |
|---|---|---|---|
| | 1A | 0 | **Content:** Overspeed |

| Cause | Diagnosis | Solution |
|---|---|---|
| Motor velocity exceeded first speed limit (P03.21) | 1. Verify if velocity command is too high;<br>2. Verify if simulated velocity command voltage is too high;<br>3. Verify if parameter value of P03.21 is too low;<br>4. Verify if input frequency and division frequency coefficient of pulse train is proper;<br>5. Verify if encoder is wired correctly | 1. Adjust velocity input command; 2. Increase P03.21 value;<br>3. Adjust pulse train input frequency and division frequency coefficient;<br>4. Verify encoder wiring; |

| Error code | Main | Sub | Display: "Er 1A1" |
|---|---|---|---|
| | 1A | 1 | **Content:** Velocity out of control |

| Cause | Diagnosis | Solution |
|---|---|---|
| Motor velocity out of control, Excessive velocity error | Verify encoder phase sequence; Verify if UVW cable is connected to the right terminal | Reconnect UVW if wrongly connected. If still remains unsolved, please contact technical support. |

| Error code | Main | Sub | Display: "Er 1b0" |
|---|---|---|---|
| | 1b | 0 | **Content:** Bus input signal dithering |

| Cause | Diagnosis | Solution |
|---|---|---|
| Controller synchronization dithering | / | Increase alarm threshold value |

| **Error code** | Main | Sub | **Display:** "Er 1b1" | |
|---|---|---|---|---|
| | 1b | 1 | **Content:** Incorrect electronic gear ratio | |
| Cause | | | Diagnosis | Solution |
| Values out of range | | | Numerator or denominator is zero/Set values out of range | Reduce number of pulses per revolution |

| **Error code** | Main | Sub | **Display:** "Er 1b3" | |
|---|---|---|---|---|
| | 1b | 3 | **Content:** External encoder frequency divider parameter error | |
| Cause | | | Diagnosis | Solution |
| Values out of range | | | Numerator or denominator is zero/Set values out of range | Reduce number of pulses per revolution |

| **Error code** | Main | Sub | **Display:** "Er 1b4" | |
|---|---|---|---|---|
| | 1b | 4 | **Content:** Excessive synchronous position mode command | |
| Cause | | | Diagnosis | Solution |
| Values out of range | | | Numerator or denominator is zero/Set values out of range | Reduce number of pulses per revolution |

| **Error code** | Main | Sub | **Display:** "Er 1c0" | |
|---|---|---|---|---|
| | 1c | 0 | **Content:** Both STO failed | |
| Cause | | | Diagnosis | Solution |
| Both STO input signals valid | | | Verify if STO power supply is normal | Verify 24V STO power supply and power cable connection |
| | | | Disconnect switch connected to STO | Close switch |

| **Error code** | Main | Sub | **Display:** "Er 1c1" | |
|---|---|---|---|---|
| | 1c | 1 | **Content:** 1st STO failed | |
| Cause | | | Diagnosis | Solution |
| 1st STO input signal valid | | | Verify if STO power supply is normal | Verify 24V STO power supply and power cable connection |
| | | | Disconnect switch connected to STO | Close switch |

| **Error code** | Main | Sub | **Display:** "Er 1c2" | |
|---|---|---|---|---|
| | 1c | 2 | **Content:** 2nd STO failed | |
| Cause | | | Diagnosis | Solution |
| 2nd STO input signal valid | | | Verify if STO power supply is normal | Verify 24V STO power supply and power cable connection |
| | | | Disconnect switch connected to STO | Close switch |

| Error code | Main | Sub | Display: "Er 210" |
|---|---|---|---|
| | 21 | 0 | **Content:** I/O input interface assignment error |

| Cause | Diagnosis | Solution |
|---|---|---|
| Input signal assigned with two or more functions. | Verify values of P04.00-P04.09, P04.44-4.47 | Set proper values for P04.00-P04.09, P04.44-4.47 |

| Error code | Main | Sub | Display: "Er 211" |
|---|---|---|---|
| | 21 | 1 | **Content:** I/O input interface function assignment error |

| Cause | Diagnosis | Solution |
|---|---|---|
| Input signal assignment error | Verify values of P04.00-P04.09, P04.44-4.47 | Set proper values for P04.00-P04.09, P04.44-4.47 |

| Error code | Main | Sub | Display: "Er 212" |
|---|---|---|---|
| | 21 | 2 | **Content:** I/O output interface function assignment error |

| Cause | Diagnosis | Solution |
|---|---|---|
| Input signal assigned with two or more functions. | Verify values of P04.10-P04.15 | Set proper values for P04.10-P04.15 |
| Input signal not assigned | Verify values of P04.10-P04.15 | Set proper values for P04.10-P04.15 |

| Error code | Main | Sub | Display: "Er 240" |
|---|---|---|---|
| | 24 | 0 | **Content:** CRC correction error during EEPROM parameter saving |

| Cause | Diagnosis | Solution |
|---|---|---|
| L1, L2 terminal voltage too low | Verify if L1, L2 terminal voltage too low | Make sure L1, L2 terminal voltage is within recommended range |
| Parameter saving anomaly | Save parameter again and restart | Save parameter again |

| Error code | Main | Sub | Display: "Er 250" |
|---|---|---|---|
| | 25 | 0 | **Content:** Gantry deviation error |

| Cause | Diagnosis | Solution |
|---|---|---|
| Excessive Gantry drivers deviation | Verify if both drivers share the same set of parameters | Unify the parameters of both drivers |
| | Verify if control cable of the drivers are properly connected | Connect control cable properly |
| | Verify if gantry communication cable is connected properly | Connect communication cable properly |

| Error code | Main | Sub | Display: "Er 251" |
|---|---|---|---|
| | 25 | 1 | **Content:** Gantry communication error |

| Cause | Diagnosis | Solution |
|---|---|---|
| Gantry communication data error | Verify if gantry communication cable is connected properly | Connect communication cable properly |

| **Error code** | Main | Sub | **Display:** "Er 260" |
|---|---|---|---|
| | 26 | 0 | **Content:** Positive/Negative position limit triggered under non-homing mode |
| Cause | | | Diagnosis / Solution |
| Positive/negative position limit triggered | | | Verify position limit signal / / |

| **Error code** | Main | Sub | **Display:** "Er 270" -- "Er 272" |
|---|---|---|---|
| | 27 | 0~2 | **Error description:** Analog input 1-3 out of range |
| Cause | | | Diagnosis / Solution |
| Analog value out of range | | | Verify if analog input value is out of range / Adjust analog input voltage |

| **Error code** | Main | Sub | **Display:** "Er 280" |
|---|---|---|---|
| | 28 | 0 | **Error description:** Output pulse frequency too high |
| Cause | | | Diagnosis / Solution |
| Frequency divided pulse output exceeds 1MHz | | | Verify if motor rotational speed and the number of frequency divided pulse output are too high / Reduce the number of frequency divided pulse output or reduce rotational speed |

| **Error code** | Main | Sub | **Display:** "Er 290" |
|---|---|---|---|
| | 29 | 0 | **Error description:** Control mode not match in full closed loop mode |
| Cause | | | Diagnosis / Solution |
| Control mode is not position mode when full closed loop mode is on | | | Verify if P00.01 is set to 0 / Make sure P00.01 is set to 0 – Position mode |

| **Error code** | Main | Sub | **Display:** "Er 291" |
|---|---|---|---|
| | 29 | 1 | **Error description:** Encoder mode not match in full closed loop mode |
| Cause | | | Diagnosis / Solution |
| Encoder mode not match in full closed loop mode | | | Only ABZ encoder is supported for the moment being / For external ABZ encoder, please set P00.31 = 0. |

| Error code | Main | Sub | Display: "Er 550" -- "Er 553" | |
|---|---|---|---|---|
| | 55 | 0~3 | **Error description:** Encoder mode not match in full closed loop mode | |
| Cause | | | Diagnosis | Solution |
| Er550: External ABZ encoder disconnected | | | Verify if encoder cable is connected properly | 1. Make sure encoder cable connection is tight,;<br>2. Change encoder cable.;<br>3. External encoder cable needs to be shielded. |
| Er551: External encoder Phase A disconnected | | | | |
| Er552: External encoder Phase B disconnected | | | | |
| Er553: External encoder Phase Z disconnected | | | | |

| Error code | Main | Sub | Display: " Er 570" | |
|---|---|---|---|---|
| | 57 | 0 | **Error description:** Forced alarm input valid | |
| Cause | | | Diagnosis | Solution |
| Forced alarm input signal occurred | | | Verify forced alarm input signal | Verify if the input wiring connection is correct |

| Error code | Main | Sub | Display: "Er 5F0" | |
|---|---|---|---|---|
| | 5F | 0 | **Content:** Motor model no. detection error | |
| Cause | | | Diagnosis | Solution |
| Automatically detected motor doesn't match set motor | | | / | Please contact our technical support |

| Error code | Main | Sub | Display: "Er 5F1" | |
|---|---|---|---|---|
| | 5F | 1 | **Error description:** Driver power module detection error | |
| Cause | | | Diagnosis | Solution |
| Driver power rating not within range. | | | Restart driver | Please contact our technical support |

| Error code | Main | Sub | Display: "Er 600" | |
|---|---|---|---|---|
| | 60 | 0 | **Error description:** Main loop interrupted timeout | |
| Cause | | | Diagnosis | Solution |
| The motor control loop calculation time overflow | | | Check for interference from devices releasing electromagnetic field | Ground driver and motor to reduce interference |
| | | | Restart driver | Replace driver |

| Error code | Main | Sub | Display: "Er 601" | |
|---|---|---|---|---|
| | 60 | 1 | **Error description:** Velocity loop interrupted timeout | |
| Cause | | | Diagnosis | Solution |
| Motor control loop calculation time overflow | | | Verify if encoder connection is and that the encoder cable is too not long (more than 20 meters) | Replace encoder cable if necessary |
| | | | Restart driver | Replace the drive with a new one |

| Error code | Main | Sub | Display: "Er 700" | |
|---|---|---|---|---|
| | 70 | 0 | **Error description:** Encryption error | |
| Cause | | | Diagnosis | Solution |
| Encryption error during initialization upon power-on. | | | Restart driver | Please contact our technical support |

| Error code | Main | Sub | Display: "Er 890" | |
|---|---|---|---|---|
| | 89 | 0 | **Error description:** Homing error | |
| Cause | | | Diagnosis | Solution |
| 1. Excess homing velocity<br>2. Homing mode is different from given signal<br>3. Sensor signal edge inconsistent | | | 1. Verify if homing velocity is too high<br>2. Verify if homing mode is set correctly<br>3. Verify if sensor signal edge is consistent | 1. Set an optimal homing velocity<br>2. Make sure sensor signal edge is consistent. |
| Inconsistent origin status | | | 1. Homing acceleration/ deceleration is set too low<br>2. Electronic gear ratio is low which causes acceleration/ deceleration to be too low | 1. If electronic gear ratio cannot be changed, please set a suitable 609A.<br>2. Increase electronic gear ratio |

| Error code | Main | Sub | Display: "Er 920" | |
|---|---|---|---|---|
| | 92 | 0 | **Error description:** External encoder parameter initialization error | |
| Cause | | | Diagnosis | Solution |
| Encoder parameter P00.37 setting error | | | Verify if P00.37 set value is out of range | Modify P00.37 set value, please use default value and see if the error still persists. |

## 8.4 Alarm clearing

### 8.4.1 Servo Drive Alarm

For alarm can be cleared ,

**Method 1 :**

1、By setting bit 7 of 6040h to 1, switches state machine from fault to initialization completion , No fault(Switch on disabled).

## 8.5 EtherCAT Communication Alarm

EtherCAT communication related alarms are erasable and will not be recorded in alarm history.

Clearing EtherCAT communication alarm is similar to clearing servo driver alarm. Please clear the alarm before switching to 402 machine state.

EtherCAT communication alarm however, relies on register clearance from the main station. Can be solved according to following steps:

1、Set bit 4 of ESC control register 0x120 (error responder) to 1.

2、The communication alarm can be cleared until the feedback of the ESC status code register 0x134~0x135 is 0.

3、By setting bit 7 of 6040h to 1, switches state machine from fault to initialization completion , No fault(Switch on disabled).

| **Error code** | Main | Sub | **Display:** "Er 73A" | |
|---|---|---|---|---|
| | 73 | A | **Error description:** SyncManager2 lost | |
| Cause | | | Diagnosis | Solution |
| Poor master performance | | | -- | Increase the alarm threshold |
| Single-unit drive has problem | | | Is it a single unit or multiple units together in the network | Switch drive |
| interfere | | | Check the grounding and network wiring quality | Replace the network cable |

| **Error code** | Main | Sub | **Display:** "Er 73b" | |
|---|---|---|---|---|
| | 73 | B | **Error description:** SYNC0 lost | |
| Cause | | | Diagnosis | Solution |
| Poor master performance | | | -- | Increase threshold value limit |
| Single-unit drive has problem | | | Is it a single unit or multiple units together in the network | Switch drive |
| interfere | | | Check the grounding and network wiring quality | Replace the network cable |

| Error code | Main | Sub | Display: "Er 73c" | |
|---|---|---|---|---|
| | 73 | C | **Error description:** Excessive Distributed Clock error | |
| Cause | | | Diagnosis | Solution |
| Poor master device performance | | | -- | Increase threshold value limit |
| Single-unit drive has problem | | | Is it a single unit or multiple units together in the network | Replace driver |
| Interference | | | Check the grounding and network wiring quality | Replace network cable |

| Error code | Main | Sub | Display: "Er 801" |
|---|---|---|---|
| | 80 | 1 | **Error description:** Unknown communication error |
| Cause | | | EtherCAT state machine transition failed |
| The status of the error can be detected | | | All ESM status |
| Network port LED | | | Blinking |
| The result status | | | The current state is maintained below the safe operation, and the operation state is switched to the safe operation state |
| Solution | | | Verify network connection and master device EtherCAT state machine transition order |

| Error code | Main | Sub | Display: "Er 802" |
|---|---|---|---|
| | 80 | 2 | **Error description:** Memory overflow |
| Cause | | | CPU failed to request memory |
| The status of the error can be detected | | | All ESM status |
| Network port LED | | | ON |
| The result status | | | The current state is maintained below the safe operation, and the operation state is switched to the safe operation state |
| Solution | | | Verify if ELD3-EC hardware is faulty |

| Error code | Main | Sub | Display: "Er 803" |
|---|---|---|---|
| | 80 | 3 | **Error description:** RAM out of bound |
| Cause | | | EtherCAT state machine memory address access request from master device is out of bound |
| The status of the error can be detected | | | All communication status |
| Network port LED | | | None |
| The result status | | | NO |
| Solution | | | Verify master device configuration or replace master device |

| Error code | Main | Sub | Display: "Er 805" |
|---|---|---|---|
| | 80 | 5 | **Error description:** FOE firmware upgrade failed |
| Cause | | | Firmware burn error |
| The status of the error can be detected | | | BOOT |
| Network port LED | | | None |
| The result status | | | Remain in the detection state |
| Solution | | | Replace firmware/driver |

| Error code | Main | Sub | Display: "Er 806" |
|---|---|---|---|
| | 80 | 6 | **Error description:** Saved ESI file does not match driver firmware |
| Cause | | | ESI file does not match driver firmware |
| The status of the error can be detected | | | INIT |
| Network port LED | | | None |
| The result status | | | Remain in the detection state |
| Solution | | | Burn matching firmware to driver |

| Error code | Main | Sub | Display: "Er 811" |
|---|---|---|---|
| | 81 | 1 | **Error description:** Invalid EtherCAT transition request |
| Cause | | | Driver received unconvertible request from EtherCAT state machine |
| The status of the error can be detected | | | All ESM Status |
| Network port LED | | | Blinking |
| The result status | | | The current state is maintained below the safe operation, and the operation state is switched to the safe operation state |
| Solution | | | Verify if the transition information from master device is correct |

| Error code | Main | Sub | Display: "Er 812" |
|---|---|---|---|
| | 81 | 2 | **Error description:** Unknown EtherCAT state machine transition request |
| Cause | | | Driver receives a transition request other than states of the EtherCAT state machine |
| The status of the error can be detected | | | All ESM Status |
| Network port LED | | | Blinking |
| The result status | | | The current state is maintained below the safe operation, and the operation state is switched to the safe operation state |
| Solution | | | Verify transition information from master device |

| Error code | Main | Sub | Display: "Er 813" |
|---|---|---|---|
| | 81 | 3 | **Error description:** Protection request from boot state |
| Cause | | | Driver receives a transition request to boot state |
| The status of the error can be detected | | | Initialize the conversion to a boot |
| Network port LED | | | Flickering |
| The result status | | | initialization |
| Solution | | | Verify if driver software version supports this state transition |

| Error code | Main | Sub | Display: "Er 814" |
|---|---|---|---|
| | 81 | 4 | **Error description:** Invalid firmware |
| Cause | | | Firmware not matched with driver |
| The status of the error can be detected | | | BOOT/INIT |
| Network port LED | | | None |
| The result status | | | Keeping in the detection status |
| Solution | | | Return driver to supplier to update firmware |

| Error code | Main | Sub | Display: "Er 815" |
|---|---|---|---|
| | 81 | 5 | **Error description:** Invalid mailbox configuration under boot state |
| Cause | | | Boot state action not supported under current configuration |
| The status of the error can be detected | | | Initialize the conversion to a boot |
| Network port LED | | | Blinking |
| The result status | | | Initialization |
| Solution | | | Verify if ELD3-EC software version supports action under this state. |

| Error code | Main | Sub | Display: "Er 816" |
|---|---|---|---|
| | 81 | 6 | **Error description:** Pre-Op status is invalid for the mailbox configuration |
| Cause | | | The synchronization manager configuration under Pre-Op is invalid |
| The status of the error can be detected | | | pre-operation |
| Network port LED | | | Blinking |
| The result status | | | initialization |
| Solution | | | 1. Verify if XML file version is consistent with software version<br>2. EtherCAT slave controller error, please contact technical support |

| Error code | Main | Sub | Display: "Er 817" |
|---|---|---|---|
| | 81 | 7 | **Error description:** Invalid SyncManager configuration |
| Cause | | | Synchronization manager configuration is invalid |
| The status of the error can be detected | | | Pre-op above |
| Network port LED | | | Single flash |
| The result status | | | Pre-op |
| Solution | | | Verify master device configuration/ESI file version |

| Error code | Main | Sub | Display: "Er 818" |
|---|---|---|---|
| | 81 | 8 | **Error description:** No valid input data |
| Cause | | | The input data is not updated for more than 1 second |
| The status of the error can be detected | | | All ESM status |
| Network port LED | | | Double flashing |
| The result status | | | The current state is maintained below the safe operation, and the operation state is switched to the safe operation state |
| Solution | | | 1. Verify if TxPDO is valid<br>2. Verify master device synchronization settings |

| Error code | Main | Sub | Display: "Er 819" |
|---|---|---|---|
| | 81 | 9 | **Error description:** No valid output data |
| Cause | | | Output data is not updated for more than 1 second |
| The status of the error can be detected | | | All ESM status |
| Network port LED | | | Double flash |
| The result status | | | The current state is maintained below the safe operation, and the operation state is switched to the safe operation state |
| Solution | | | 1. Verify if RxPDO is valid<br>2. Verify master device synchronization settings |

| Error code | Main | Sub | Display: "Er 81A" |
|---|---|---|---|
| | 81 | A | **Error description:** Synchronization error |
| Cause | | | RxPDO and DC update order failed or one of them is not updated in sync |
| The status of the error can be detected | | | All ESM status |
| Network port LED | | | Single flash |
| The result status | | | The current state is maintained below the safe operation, and the operation state is switched to the safe operation state |
| Solution | | | 1. Verify if PXPDO is valid<br>2. Verify master device synchronization settings |

| Error code | Main | Sub | Display: "Er 81b" |
|---|---|---|---|
| | 81 | b | **Error description:**SyncManager2 watchdog timer timeout |
| Cause | | | The RxPDO update timeout in operational state |
| The status of the error can be detected | | | Operation |
| Network port LED | | | Double flash |
| The result status | | | Safe operation |
| Solution | | | 1. Verify if ELD3-EC network is connected<br>2. Verify RxPDO update time |

| Error code | Main | Sub | Display: "Er 81c" |
|---|---|---|---|
| | 81 | c | **Error description:** Invalid SyncManager type |
| Cause | | | Synchronization Manager configuration types other than the following:<br>1. Mailbox output<br>2. Mailbox input<br>3. Process data output<br>4. Process data input |
| The status of the error can be detected | | | Pre-operation |
| Network port LED | | | Blinking |
| The result status | | | Initialize |
| Solution | | | Verify if XML file version is consistent with software version |

| Error code | Main | Sub | Display: "Er 81d" |
|---|---|---|---|
| | 81 | d | **Error description:** Invalid output configuration |
| Cause | | | Process data output synchronization manager configuration is invalid |
| The status of the error can be detected | | | Pre-operation |
| Network port LED | | | Blinking |
| The result status | | | Initialize |
| Solution | | | 1. Verify ELD3-EC synchronization manager configuration<br>2. Verify if XML file version is consistent with software version |

| Error code | Main | Sub | Display: "Er 81E" |
|---|---|---|---|
| | 81 | E | **Error description:** Invalid input configuration |
| Cause | | | Process data input synchronization manager configuration is invalid |
| The status of the error can be detected | | | Pre-operation |
| Network port LED | | | Blinking |
| The result status | | | Initialize |
| Solution | | | 1. Verify ELD3-EC synchronization manager configuration<br>2. Verify if XML file version is consistent with software version |

| Error code | Main | Sub | Display: "Er 821" |
|---|---|---|---|
| | 82 | 1 | **Error description:** Waiting for EtherCAT state machine Init state |
| Cause | | | Driver waiting for master device to send Init request |
| The status of the error can be detected | | | All ESM status |
| Network port LED | | | Blinking |
| The result status | | | Keeping the current state |
| Solution | | | Verify transition request sent from master device |

| Error code | Main | Sub | Display: "Er 822" |
|---|---|---|---|
| | 82 | 2 | **Error description:** Waiting for the EtherCAT state machine Pre-Op state |
| Cause | | | Driver waiting for master device to send Pre-Op request |
| The status of the error can be detected | | | Safe operation, operation |
| Network port LED | | | Blinking |
| The result status | | | Keeping the current state |
| Solution | | | Verify transition request sent from master device |

| Error code | Main | Sub | Display: "Er 823" |
|---|---|---|---|
| | 82 | 3 | **Error description:** Waiting for master device for Safe-Op request |
| Cause | | | Process data output synchronization manager configuration is invalid |
| The status of the error can be detected | | | Operation |
| Network port LED | | | Blinking |
| The result status | | | Keeping the current state |
| Solution | | | Verify transition request sent from master device |

| Error code | Main | Sub | Display: "Er 824" |
|---|---|---|---|
| | 82 | 4 | **Error description:** Invalid process data input mapping |
| Cause | | | TxPDO is configured with non-mappable objects |
| The status of the error can be detected | | | Safe operation |
| Network port LED | | | Blinking |
| The result status | | | Pre-operation |
| Solution | | | Reconfigure the TxPDO mapping object |

| Error code | Main | Sub | Display: "Er 825" |
|---|---|---|---|
| | 82 | 5 | **Error description:** Invalid process data output mapping |
| Cause | | | RxPDO is configured with non-mappable objects |
| The status of the error can be detected | | | Safe operation |
| Network port LED | | | Blinking |
| The result status | | | Pre-operation |
| Solution | | | Reconfigure the RxPDO mapping object |

| Error code | Main | Sub | Display: "Er 828" |
|---|---|---|---|
| | 82 | 8 | **Error description:** Sync mode not supported |
| Cause | | | Sync mode is not supported in the current configuration |
| The status of the error can be detected | | | Safe operation |
| Network port LED | | | Single flash |
| The result status | | | Pre-operation |
| Solution | | | 1. Verify ELD3-EC software version<br>2. Verify XML version |

| Error code | Main | Sub | Display: "Er 82b" |
|---|---|---|---|
| | 82 | b | **Error description:** Invalid inputs and outputs |
| Cause | | | No RxPDO and TxPDO updates for more than 1 second |
| The status of the error can be detected | | | All ESM status |
| Network port LED | | | Blinking |
| The result status | | | The current state is maintained below the safe operation, and the operation state is switched to the safe operation state |
| Solution | | | 1. Verify if current RxPDO and TxPDO are invalid<br>2. Verify master device synchronization settings |

| Error code | Main | Sub | Display: "Er 82c" |
|---|---|---|---|
| | 82 | c | **Error description:** Fatal synchronization error |
| Cause | | | DC watchdog timer timeout |
| The status of the error can be detected | | | Safe operation, operation |
| Network port LED | | | Double flash |
| The result status | | | Safe operation |
| Solution | | | 1. Verify if ELD3-EC hardware is faulty<br>2. Verify DC setting and delay |

| Error code | Main | Sub | Display: "Er 82d" |
|---|---|---|---|
| | 82 | d | **Error description:** No synchronization error |
| Cause | | | Synchronization is invalid |
| The status of the error can be detected | | | operation |
| Network port LED | | | Single flash |
| The result status | | | Safe operation |
| Solution | | | 1. Verify if "fatal synchronization error" has occurred.<br>2. Verify master device synchronization settings |

| Error code | Main | Sub | Display: "Er 82E" |
|---|---|---|---|
| | 82 | E | **Error description:** Synchronization cycle time is too short |
| Cause | | | Master device synchronization cycle time is set to less than 125 microseconds |
| The status of the error can be detected | | | operation |
| Network port LED | | | Single flash |
| The result status | | | Pre-operation |
| Solution | | | Verify master device synchronization cycle time |

| Error code | Main | Sub | Display: "Er 830" |
|---|---|---|---|
| | 83 | 0 | **Error description:** Invalid Distributed Clock synchronization settings |
| Cause | | | Synchronization settings in sync mode are not valid |
| The status of the error can be detected | | | Safe operation |
| Network port LED | | | Blinking |
| The result status | | | Pre-operation |
| Solution | | | Verify master device synchronization settings |

| Error code | Main | Sub | Display: "Er 832" |
|---|---|---|---|
| | 83 | 2 | **Error description:** Distribution Clock phase-locked loop failure |
| Cause | | | Distribution Clock phase-locked loop setting is invalid |
| The status of the error can be detected | | | Safe operation, operation |
| Network port LED | | | Single flash |
| The result status | | | Safe operation |
| Solution | | | Verify master device Distribution Clock settings and network transmission delay |

| Error code | Main | Sub | Display: "Er 835" |
|---|---|---|---|
| | 83 | 5 | **Error description:** Distribution Clock cycle time is invalid |
| Cause | | | Set synchronization cycle time is not proportional to drive position loop |
| The status of the error can be detected | | | Safe operation |
| Network port LED | | | Flickering |
| The result status | | | Pre-operation |
| Solution | | | Refer to user manual to set a reasonable synchronization cycle time. |

| Error code | Main | Sub | Display: "Er 836" |
|---|---|---|---|
| | 83 | 6 | **Error description:** Invalid Distribution Clock synchronization cycle time |
| Cause | | | The synchronization cycle time setting is not as the following<br>1：125us 2：250us 3：500us<br>4：750us 5：1000us 6：2000us<br>7：4000us |
| The status of the error can be detected | | | Safe operation |
| Network port LED | | | Single flash |
| The result status | | | Pre-operation |
| Solution | | | Verify master device synchronization cycle time |

| Error code | Main | Sub | Display: "Er 850" |
|---|---|---|---|
| | 85 | 0 | **Error description:** EEPROM is inaccessible |
| Cause | | | EtherCAT slave controller failed to access EEPROM |
| The status of the error can be detected | | | All ESM status |
| Network port LED | | | Flickering |
| The result status | | | Keeping the current state |
| Solution | | | 1. Verify if ELD3-EC hardware is faulty<br>2. Verify if master device released access |

| Error code | Main | Sub | Display: "Er 851" |
|---|---|---|---|
| | 85 | 1 | **Error description:** EEPROM error |
| Cause | | | EEPROM operation of EtherCAT slave controller failed |
| The status of the error can be detected | | | All ESM status |
| Network port LED | | | Flickering |
| The result status | | | Keeping the current state |
| Solution | | | Verify if master device released access |

| Error code | Main | Sub | Display: "Er 852" |
|---|---|---|---|
| | 85 | 2 | **Error description:** Hardware is not ready |
| Cause | | | Data communication lost |
| The status of the error can be detected | | | All ESM status |
| Network port LED | | | ON |
| The result status | | | Keeping the current state |
| Solution | | | Verify if ELD3-EC hardware is faulty |

| Error code | Main | Sub | Display: "Er 860" |
|---|---|---|---|
| | 86 | 0 | **Error description:** EtherCAT frame lost per unit time exceeds limit |
| Cause | | | EtherCAT frame lost per unit time exceeds the setting in 2635-00h |
| The status of the error can be detected | | | All states |
| Network port LED | | | None |
| The result status | | | Keeping the detection state |
| Solution | | | Change to network cable with higher bandwidth / Replace driver |

| Error code | Main | Sub | Display: "Er 870" |
|---|---|---|---|
| | 87 | 0 | **Error description:** Driver can't be enabled under current control mode |
| Cause | | | Enable driver under unsupported mode |
| The status of the error can be detected | | | All status |
| Network port LED | | | None |
| The result status | | | Maintain status |
| Solution | | | Switch to the correct control mode |

# Contact Us

## Leadshine Technology Co., Ltd.

### Headquarters

Address:
15-20/F, Block B, Nanshan I Valley, No.3157, Nanshan District, Shenzhen City, Guangdong Province, China
Tel:
+86 755 26411692
Fax:
+86 755 26402718
Website:
www.leadshine.com
Emails:
sales@leadshine.com

## *Leadshine Global Retailers Network*

*Get in touch with us or any of your local Leadshine certified retailers by visiting our global website.*

**Technical Support**
**Tel:** 86-755-2641-8447
86-755-2641-8774 (Asia, Australia, Africa)
86-755-2665-5136 (North and South America)
86-755-8654-2465 (Europe)
**Fax:** 86-755-2640-2718
**Email:** tech@leadshine.com

**Sales Hot Line**
**Tel:** 86-755-2641-7674 (Asia, Australia, Africa)
86-755-2641-7617 (North and South America)
86-755-2640-9254 (Europe)
**Email:** sales@leadshine.com

**Leadshine Overseas**

Leadshine America, Inc.

North America Office

Address:
26050 Towne Centre Dr. Foothill Ranch California United States
Tel:
1-949-608-7270
Fax:
1-949-638-7298
Website:
www.leadshineusa.com
Emails:
sales@leadshineusa.com