EL7-PN Series AC Servo Drive

User Manual

Foreword

Thank you for purchasing Leadshine EL7-PN series AC Servo drives. This manual will provide information on the EL7-PN series servo products regarding product safety & specifications, installations & wiring, tuning & problem diagnostics.

Please contact us at tech@leadshine.com if you need further technical support.

Incorrect operation may cause unexpected accident, please read this manual carefully before using product.

- ✧ We reserve the right to modify equipment and documentation without prior notice.
- ✧ We won't undertake any responsibility with any customer's modification of product and the warranty of product will be canceled at the same time.

Safety Precautions

Please read the safety instructions carefully before using the products and pay attention to the safety signs.

	Might incur death or serious injury
	Might cause injury to operating personals or damage to equipment
	Might cause damage to equipment
	High voltage. Might cause electrocution to personals in contact
	Hot surface. Do not touch
	Protective Earth

Safety instructions

Warning

- ✓ The design of the product is not to be used in mechanical system which may incur health hazard.
- ✓ Users should be aware of the product safety precautions during design and installations of the equipment to prevent any unwanted accident.

Upon receiving

Caution

- ✓ The use of damaged or faulty product(s) is prohibited.
- ✓ Please refer to item checklist. If the labels don't match, please do not install.

Transportation

Caution

- ✓ Please provide storage and transportation under protected conditions.
- ✓ Do not stack the products too high up to prevent toppling.
- ✓ The product should be packaged properly during transportation,
- ✓ Do not hold the product by the cable, motor shaft or encoder while transporting it.
- ✓ The product should be protected from external forces and shock.

Installation

Caution

Servo drive and Motor:

- ✓ Do not install around combustibles to prevent fire hazard.
- ✓ Avoid vibration and impact.
- ✓ Do not install products that are damaged or incomplete.

Servo drive:

- ✓ Please install in electrical cabinet with sufficient protection from outside elements.
- ✓ Reserve sufficient gap as per the installation guide.
- ✓ Make sure to have good heat sinking.
- ✓ Avoid dust, corrosive gas, conductive object or fluid and combustibles.

Servo Motor:

- ✓ Make sure installation is tight to prevent it from loosening.
- ✓ Prevent fluid from leaking into motor and encoder.
- ✓ Protect motor from impact to avoid damaging encoder.
- ✓ Motor shaft should not bear the load beyond the limits as specified.

Wiring

Warning

- ✓ Participate installation personals should have sufficient training in product installation safety.
- ✓ Please power off and wait for 10 minutes to make sure a full discharge of electricity.
- ✓ Servo drive and motor must be connected to ground.
- ✓ Connect the cables only after servo drive motor installed correctly
- ✓ Make sure the wires are properly managed and insulation layer is not torn to prevent electrocution.

Caution

- ✓ Wiring must be correctly connected to prevent damage to product(s)
- ✓ Servo motor U, V, W terminal should be connected correctly and NOT connected directly to an AC power supply.
- ✓ Capacitor, inductor or filter shouldn't be installed between servo motor and servo drive.
- ✓ Connecting wires or any non-heat resistant components should be put near to heat sink of the servo drive or motor.
- ✓ The flyback diode which is connected in parallel to output signal DC relay must not be connected in reverse.

Tuning and running

Caution

- ✓ Make sure the wirings of servo drive and servo motor are installed and fixed properly before powering on.
- ✓ On the first time tuning of the product, it is recommended to run unloaded until all the parameter settings are confirmed to prevent any damage to the product or machine.

Usage

Caution

- ✓ Please install an emergency stop button on machine to stop operation immediately if there is an accident.
- ✓ Please make sure machine is stopped before clearing an alarm.
- ✓ Servo drive must be matched with specified motor.
- ✓ Frequent restart of the servo system might incur damage to the product.
- ✓ Servo drive and motor will be hot to touch shortly after power off. Please be careful.
- ✓ Modification(s) to servo system is prohibited.

Error Handling

Warning

- ✓ Please wait for 5 minutes after powering off for the electricity to be fully discharged before uninstalling the cables.
- ✓ Participate maintenance personals should have sufficient training in maintenance and operation of this product series.

Caution

- ✓ Please handle the error before clearing an alarm.
- ✓ Keep away from machine after a restart upon alarm. Mechanical axis might suddenly move. Such hazard should be prevented during the utilization of the product.

Model Selection

Caution

- ✓ Rated torque of the servo motor should be higher than continuous designated torque when fully loaded.
- ✓ Load inertia ratio of the motor should be lower or equals to recommended value for specified models
- ✓ Servo drive must be matched with specified motor.

Warranty Information

Available for

Leadshine overseas warranty only covers Leadshine AC servo products that are obtained through **Leadshine certified sales channel outside of China**.

Warranty claim

- All Leadshine AC servo products (Servo drives and motors) overseas enjoy **18-month** warranty period.
- Due to unforeseen circumstances in different sales regions around the globe, we recommend users to seek technical support from directed sales channel as any warranty claim or repair services may be required.
- Please be informed that any maintenance/repair work that is outside of the warranty claim conditions might incur some charges and to be confirmed before product(s) is being sent in.
- The duration required for maintenance work to be done is to be confirmed after initial check-up but we reserve the right to prolong the repair duration if needed.
- Discontinued products within warranty period will be replaced with a product of similar specifications.

Steps to warranty claim

1. Visit Leadshine global site www.leadshine.com to look for local certified sales channel.
2. Contact designated sales channel to check if any fee might incur. May include repair fee, spare part cost or shipping cost.

Circumstances where warranty claim is not available

- Damage/Loss due to occurrence of natural or man-made disaster such as fire, flood or earthquake.
- Installation or wiring error
- If there is any modification done to the product
- Warranty label on products is torn or not existing
- Not a product bought from Leadshine certified global network of retailers/distributors.

Before warranty claim

- Please backup device parameters before any repair work/warranty claim. Leadshine and Leadshine certified retailers/distributors will not be held responsibilities for any data loss.
- If available, please send product back in original packaging or make sure it is well packaged to prevent any damage to the product during shipping.

Leadshine Technology Co.,Ltd. and its certified sales channel reserved the final right of the interpretation of the warranty information.

TABLE OF CONTENT

WARRANTY INFORMATION **6**

CHAPTER 1 INTRODUCTION **10**

1.1 PRODUCT INTRODUCTION 10
1.2 MODEL NUMBER STRUCTURE 11
1.2.1 Servo Drive *11*
1.2.2 Servo Motor *12*
1.3 SERVO DRIVE TECHNICAL SPECIFICATIONS 13
1.4 SERVO DRIVE PORTS AND CONNECTORS 15
1.5 MOTOR PORTS AND CONNECTORS 17

CHAPTER 2 INSTALLATION & WIRING **18**

2.1 SERVO DRIVE INSTALLATION 18
2.1.1 Servo drive installation environment *18*
2.1.2 Servo drive dimension *19*
2.2 SERVO MOTOR INSTALLATION 21
2.2.1 Installation conditions *21*
2.2.2 Precautions during installation *21*
2.3 EL7-PN WIRING DIAGRAM 23
2.4 SERVO DRIVE PORTS 26
2.5 X1 MAIN POWER SUPPLY 27
2.5.1 Regenerative resistor selection and connections *28*
2.5.2 Wire Gauge for Main Power Supply *33*
2.5.3 Holding brake wiring diagram *34*
2.5.4 Cable selection for motor with holding brake *35*
2.6 MOTOR POWER SUPPLY X2 37
2.6.1 Motor power cable selection *37*
2.7 CN1 I/O SIGNALS PORT 39
2.8 CN2 MOTOR ENCODER 39
2.8.1 Cable selection for I/O signal port CN1 and motor encoder port CN2 ..... *40*
2.8.2 Motor encoder cable and connector selection *41*
2.9 CN3/CN4 PROFINET COMMUNICATION PORT 42
2.10 CN6 SAFE TORQUE OFF (STO) PORT 43
2.11 USB MINI TUNING PORT 44
2.12 I/O SIGNALS 45
2.12.1 Common input circuit *45*
2.12.2 Common output circuit *46*
2.12.3 DI signal function configuration *46*
2.12.4 DO signal function configuration *48*
2.13 MEASURES AGAINST ELECTROMAGNETIC INTERFERENCE 49
2.13.1 Grounding connection and other anti-interference wiring connections *50*
2.13.2 Using line filter *50*

CHAPTER 3 PARAMETER 52

3.1 PARAMETER LIST 52
3.1.1 Servo drive parameter 52
3.2 PARAMETER FUNCTION 60
3.2.1【Class 0】Basic Settings 60
3.2.2【Class 1】Gain Adjustments 65
3.2.3【Class 2】Vibration Suppression 74
5.2.4【Class 3】Velocity Control 80
5.2.5【Class 4】I/O Interface Setting 81
3.2.6【Class 5】Extension settings 88
3.2.7【Class 6】Other settings 92
3.2.8【Class 7】Factory settings 97
3.2.9 【Class A】PN communication 98
3.2.10 【Class B】PN-EPOS 101

CHAPTER 4 SERVO DRIVE OPERATION 107

4.1 START WITH DRIVER OPERATION 107
4.1.1 Checklist before operation 107
4.1.2 Trial Run 108
4.1.3 Motor rotational direction settings 108
4.1.4 Holding Brake Settings 109
4.1.5 Servo stop 110
4.1.6 Electronic gear ratio 122
4.2 FRONT PANEL 123
4.2.1 Panel Display and Operation 124
4.2.2 Front Panel Locking 125
4.2.3 Data Monitoring Mode 125
4.2.4 Parameter saving using front panel 135
4.3 AUXILIARY FUNCTIONS 136

CHAPTER 5 APPLICATION CASE 141

5.1 GAIN ADJUSTMENT 141
5.2 INERTIA MEASURING FUNCTION 143
5.2.1 Online inertia determination 143
5.2.2 Offline inertia determination 143
5.3 AUTO GAIN ADJUSTMENT 147
5.4 MANUAL GAIN ADJUSTMENT 150
5.5 GAIN SWITCHING 152
5.6 FEEDFORWARD GAIN 158
5.6.1 Velocity feedforward 158
5.6.2 Torque feedforward 159
5.7 MODEL FOLLOWING CONTROL 161
5.8 FRICTION COMPENSATION FUNCTION 162
5.9 SAFETY FUNCTIONS 163
5.9.1 Torque limiting function 163

5.9.2 External brake deactivation output signal BRK-OFF *164*
5.9.3 Emergency stop function *166*
5.10 VIBRATION SUPPRESSION 166
5.11 END VIBRATION SUPPRESSION 170
5.12 MECHANICAL PROPERTIES ANALYSIS 172
5.13 MULTITURN ABSOLUTE ENCODER 173

CHAPTER 6 PROFINET 179

6.1 SUPPORTED PROFINET TELEGRAM 179
6.2 I/O DATA SIGNAL 181
6.3 CONTROL WORDS 182
6.3.1 STW 1 ..... *182*
6.3.2 STW2 ..... *183*
6.3.3 POS_STW1/2 ..... *184*
6.4 STATUS WORD 185
6.4.1 ZSW1 ..... *185*
6.4.2 ZSW2 ..... *186*
6.4.2 POS_ZSW1/2 ..... *188*
6.5 HOMING MODE SUPPORTED UNDER TELEGRAM 111 189

CHAPTER 7 WARNING AND ALARM 211

7.1 SERVO DRIVE WARNING 211
7.2 SERVO DRIVE ALARM 212
7.3 ALARM HANDLING 215
7.4 ALARM CLEARING 229
7.4.1 Servo Drive Alarm *229*

CONTACT US 230

Chapter 1 Introduction

1.1 Product Introduction

EL7-PN Series AC servo products are high performance AC digital servo which we have proudly developed at Leadshine Technology Co.,Ltd. It is designed for position/velocity/torque high accurate control with power rating ranging from 400W up to 7.5kW. Based on the PROFINET protocol, it can be seamlessly connected through Ethernet connection to controllers/drives that support this standard protocol.

EL7-PN series AC servo drives are using the latest Digital Signal Processing (DSP) chip and Intelligent Power Module (IPM) with compact components integration and great reliability. Using the best PID calculation for Pulse Width Modulation (PWM) control, our EL7-PN series products are the one to beat in this product category.

This driver series supports automatic inertia ratio identification, vibration suppression and automatic/manual gain settings. It also comes with Safe Torque Off (STO) of SIL3 grading and matching regenerative resistor. We have also incorporated our PN series servo drives and motors in industries such as logistic, packing, automotive manufacturing, renewable energy and other demanding applications.

First time user of the EL7-PN series servo products can refer to this manual for more information on this product that cannot be covered in this short introduction. For further technical support, please do contact us or any local Leadshine certified retailers on Contact Us page.

1.2 Model Number Structure

1.2.1 Servo Drive

EL7	-	PN	400	F	□	-	□
①		②	③	④	⑤		⑥

No	Description	
①	Series No.	EL7：EL7 AC Servo Drive Series
②	Communication protocol	PN：PROFINET
③	Power rating	400：400W 750:750W 1000:1000W 1500:1500W 2000: 2000W 3000:3000W 4400: 4400W 5500: 5500W 7500:7500W
④	Type	F: Full functions with STO
⑤	Voltage rating	*Blank*: 1ph/3ph 220VAC T: 3ph 380VAC
⑥	Extra(customized)	*Blank*: Standard

Driver Label

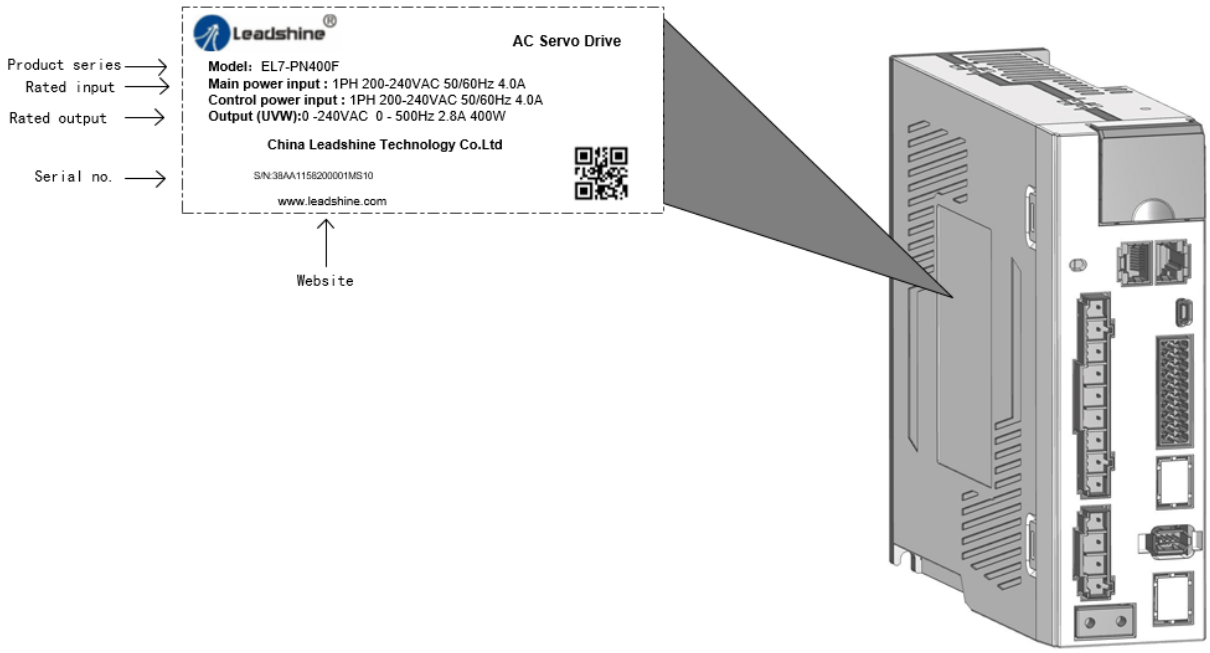

1.2.2 Servo Motor

ELM1	H	-	0400	M	A	60	F	T	-	□
(1)	(2)		(3)	(4)	(5)	(6)	(7)	(8)		(9)

(1)Series No.	
ELM1	ELM1 Series servo motor
ELM2	ELM2 Series servo motor

(2)Inertia Ratio	
L	Low
M	Medium
H	High

(3)Power Rating			
0050	50W	2000	2000W
0100	100W	2900	2900W
0200	200W	3000	3000W
0400	400W	4000	4000W
0750	750W	4400	4400W
0850	850W	5000	5000W
1000	1000W	5500	5500W
1300	1300W	7000	7000W
1500	1500W	7500	7500W
1800	1800W		

(4)Encoder Type	
L	23-bit optical multiturn
M	23-bit magnetic multiturn

(5)Rated Speed	
A	3000rpm
B	2500rpm
C	2000rpm
D	1500rpm

(6)Frame Size	
40	40mm
60	60mm
80	80mm
100	100mm
130	130mm
180	180mm

(7)Motor Type	
E	With brake，oil seal
F	No brake，oil seal

(8)Voltage	
Blank	220VAC
T	380VAC

(9Motor Connector	
Blank	Direct Connector
H	Aviation Connector

1.3 Servo Drive Technical Specifications

EL7-PN 220V Models

EL7- PNF series	EL7-PN400F	EL7- PN750F	EL7- PN1000F	EL7- PN1500F	EL7- PN2000F
Rated power (W)	400	750	100	1500	2000
Rated Current (Arms)	3.5	5.5	7	9.5	12
Peak Current (Arms)	9.2	16.6	18.7	31.1	36
Size (mm)	55*175*179			80*175*179	
Main Power Supply	Single phase AC 220V, -15%~+10%, 50/60Hz				
Control Circuit Power Supply					

EL7-PN 380V Models

EL7- PNFT series	EL7- PN750	EL7- PN1000	EL7-PN1500	EL7-PN2000	EL7-PN3000	EL7-PN4400	EL7-PN5500	EL7-PN7500
Rated Power(W)	750	1000	1500	2000	3000	4400	5500	7500
Rated Current (Arms)	2.7	3.5	5.4	8.4	11.9	16.5	20.8	25.7
Peak Current (Arms)	8.6	10.6	14.9	24.8	33.2	38.9	51.6	33.6
Size (mm)	55*175*179			80*175*179		89*250*230		
Main Power Supply	Three phase AC 380V~440V, -15%~+10%, 50/60Hz							
Control Circuit Power Supply	Single phase AC 380V~440V, -15%~+10%, 50/60Hz							

Drive mode		IGBT PWM sinusoidal wave drive	
Cooling method		All product models are fan-cooled.	
Control mode		PROFINET RT and IRT	
Supported telegrams		Telegram 1/3/111/102/105 (110/2/5/7/9 still under development)	
Electronic gear ratio		1～8388608/1～8388608	
Torque limit		As per set in parameter	
Encoder Feedback		RS485 protocol: 23-bit multiturn absolute magnetic/optical encoder	
I/O	Digital Input	6 Digital Inputs (Supports NPN and PNP)	
		Configurable input signals:	1. Servo enabled (SRV-ON) 2. Positive limit switch (POT) 3. Negative limit switch (NOT) 4. Homing switch (HOME-SWITCH) 5. Emergency stop (E-Stop) 6. Clear Alarm （A-CLR）
	Digital Output	3 Digital Outputs (3 double ended)	

		Configurable output signals:	1. Alarm (ALM) 2. Servo ready (SRDY) 3. External brake off (BRK-OFF) 4. Positioning completed (INP) 5. Velocity at arrival (AT-SPEED) 6. Torque limiting command (TLC) 7. Zero speed position (ZSP) 8. Velocity coincidence (V-COIN) 9. Position command (P-CMD) 10. Velocity limit (V-LIMIT) 11. Velocity command (V-CMD) 12. Servo enabled (SRV-ST) 13. Homing done (HOME-OK)
	Encoder Output	Encoder ABZ differential pulse output	
Communication Port	**USB mini**	Modbus USB2.0 (No need to connect driver to power supply)	
	PROFINET	PROFINET protocol	
Software		Driver tuning through **Motion Studio** Ver. 2.2.x. Parameters tuning in current loop, position loop, velocity loop; Modify I/O signal and motor parameters; Variables(velocity, position deviation, etc.) monitoring using step diagrams	
Driver Front Panel		5 push buttons and 8-segments display	
Holding brake		Built-in (Supports external brake)	
Safety Protection		Overcurrent. Overvoltage. Undervoltage. Overheat. Overload. Overtravel. Single-Phasing. Regenerative resistor error. Position deviation error. Encoder feedback error. Excessive braking rate. EEPROM error	
Safe Torque Off (STO) function		Available for all EL7-PNF series products	
Environment	**Temperature**	Storage: -20-80℃ (Condensation free); Installation: 0-55℃ (Not frozen)	
	Humidity	Under 90%RH (Condensation free)	
	Altitude	Up to 1000m above sea level	
	Vibration	Less than 0.5G (4.9m/s2) 10-60Hz (non-continuous working)	
	IP ratings	IP20	

1.4 Servo Drive Ports and Connectors

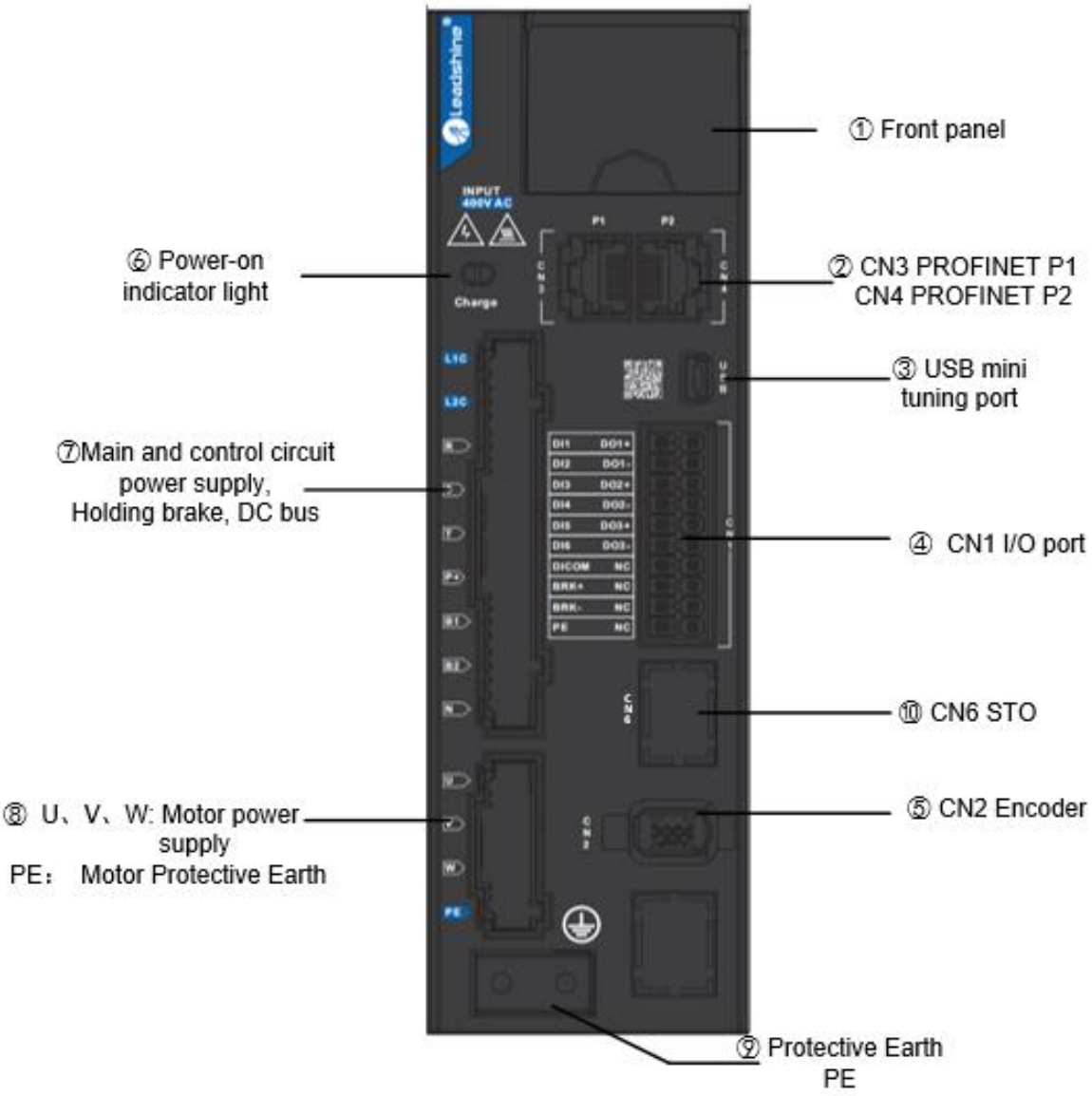

Front view of EL7-PN Series AC Servo Drive

Parts & Connectors	Description
Front Panel	Including a LED display and 5 buttons. LED display is used to display servo driver status and parameter settings. 5 buttons： **M** ： *To switch between different modes and parameters* ◀ ： *Switch between value* ▲ ： *Switch between sub-menus/Increase* ▼ ： *Switch between sub-menus/Decrease* **S** : *Enter*
USB mini Data Port	Connect to computer for tuning of servo driver. Please connect to main power supply and tuning cable to tune the servo drive.
CN6 STO(Safety Torque Off)	STO connecters. Used for any application requiring STO functions.
CN1 I/O signal	I/O signal connection terminals
CN2 Encoder	Connect to motor encoder
CN3 CN4 PROFINET Communication Port	Connect to controller with PROFINET interface
Power-on indicator light	Lights up when servo driver is connected to main power supply. Please do not touch the power terminal immediately after power off as the capacitor might require some time to discharge.
Main power supply 220/380VAC	**L1C**、**L2C** ： *Control circuit power supply(Single phase 220VAC)* **L1**、**L2**、**L3**：*Main power supply 220VAC/380VAC* *Note：EL7-PN series supports 1P/3P 220/380VAC main power supply* **P+:** *Positive terminal of servo drive internal DC bus* **P+,B1,B2**: *Connect B1 and B2 to use internal regenerative resistor；If an external regenerative resistor is needed, connect it to P+ and B2，disconnect B1 and B2.* **N:** *Negative terminal of servo drive internal DC bus*
Motor connectors	U,V,W Motor connector: Connect to U,V,W terminals on servo motor PE motor earth terminal: Connect to motor PE terminal
Protective Earth PE	Connect to PE of main power supply. For grounding

1.5 Motor ports and connectors

Motors with aviation connectors

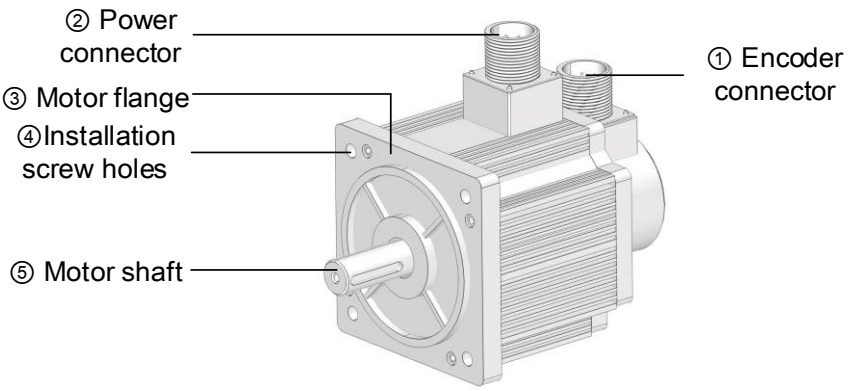

Motors with direct connectors

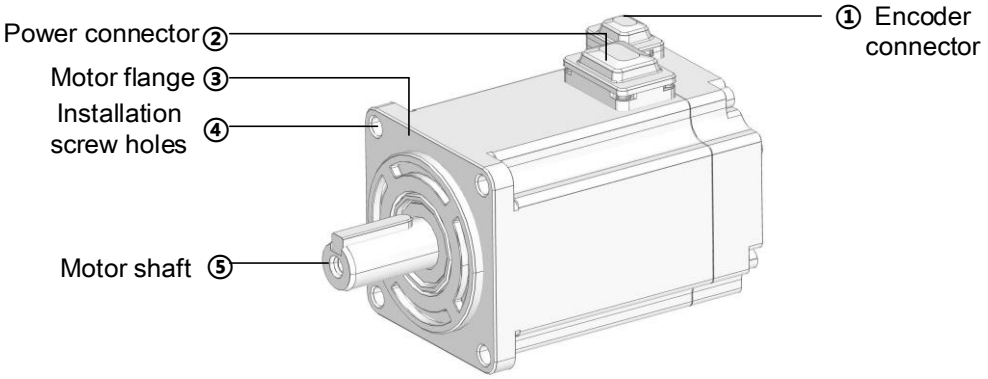

Chapter 2 Installation & Wiring

2.1 Servo Drive Installation

2.1.1 Servo drive installation environment

Temperature	Storage: -20-80℃ (Condensation free); Installation: 0-55℃ (Not frozen)
Humidity	Under 90%RH (Condensation free)
Altitude	Up to 1000m above sea level
Vibration	Less than 0.5G (4.9m/s2) 10-60Hz (non-continuous working)
Atmospheric	No corrosive gas, combustibles, dirt or dust.
IP ratings	IP20

2.1.2 Servo drive dimension

Dimension 1：EL7-PN400~1000F / EL7-PN750~1500FT

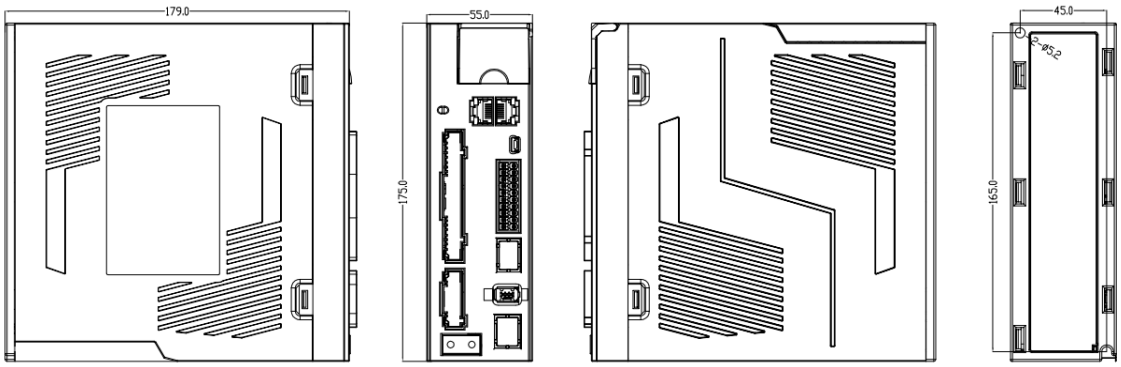

55mm×175mm×179mm

Dimension 2：EL7-PN1500~2000F / EL7-PN2000~3000FT

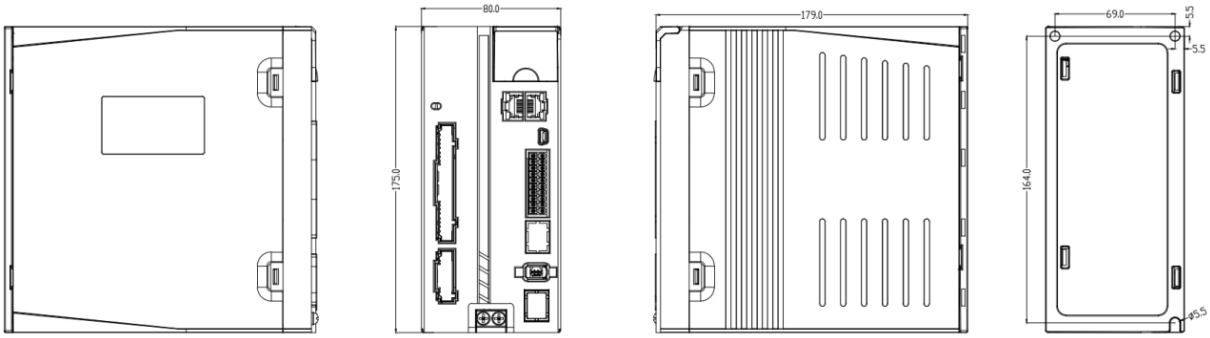

80mm×175mm×179mm

Dimension 3：EL7-PN4400~7500FT

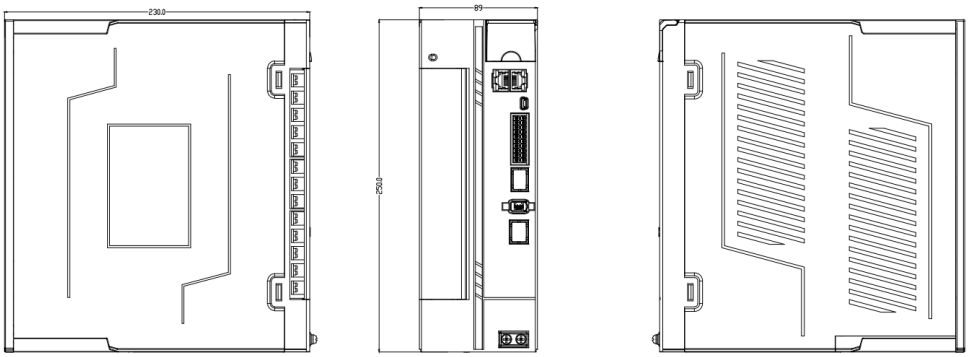

89mm×230mm×250mm

Space requirement for installation

In order to ensure efficient heat dissipation, please leave at least 10mm installation space in between drivers. If drivers need to be mounted compactly, please leave at least 1mm of installation space. Please keep in mind that under such conditions, the drivers can only run at 75% of actual load rate.

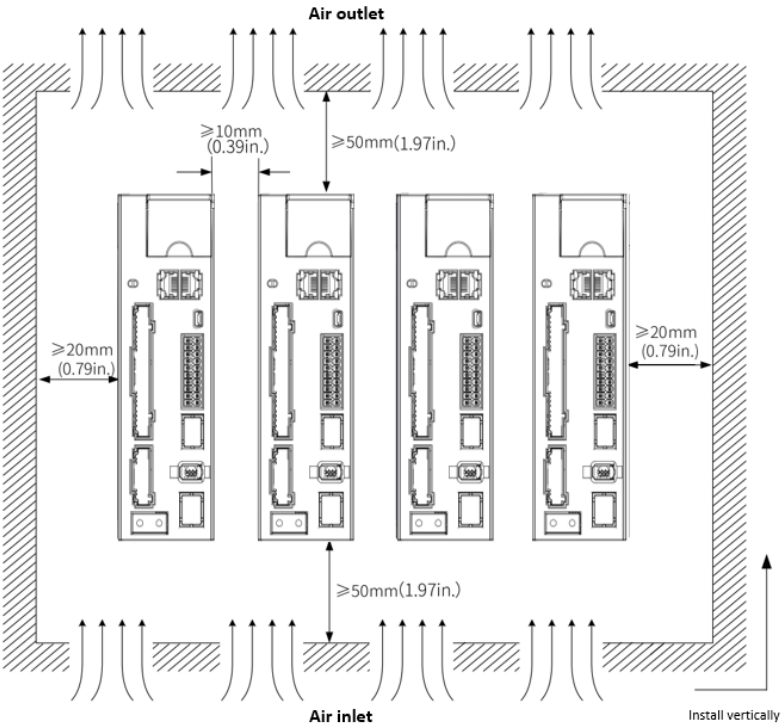

- **Installation method**

Please install the driver vertical to ground facing forward for better heat dissipation. Always install in rows and use heat insulation board to separate between rows. Cooling fans are recommended for drivers to achieve optimal performance.

- **Grounding**

PE terminals must be grounded to prevent electrocution hazard or electromagnetic interference.

- **Wiring**

Please ensure there is no liquid around the wiring and connectors as liquid leakage may cause serious damage to the driver(s).

- **RJ45 port cover**

Please cover unconnected RJ45 port(s) on top of the driver to prevent dust or liquid from damaging the ports.

- **Battery kit**

If there is a need for battery kit, please remember to leave a room in the electrical cabinet for it.

2.2 Servo Motor Installation

2.2.1 Installation conditions

Installation conditions may affect the lifespan of a motor

- Please keep away from corrosive fluid and combustibles.
- If dusty working environment is unavoidable, please use motors with oil seal.
- Please keep away from heat source.
- If motor is used in enclosed environment without heat dissipation, motor lifespan will be short.
- Please check and clean the installation spot before installation.

2.2.2 Precautions during installation

Installation method

Install horizontal to ground

Make sure power cable and encoder cable is facing downwards to make sure fluid doesn't leak into the ports.

Install vertical to ground

Please use a motor with oil seal when paired with a reducer to prevent reducer oil from leaking into the motor.

Oil- and waterproofing

- Do not submerge motor/cable under oil/water
- Please use a motor with oil seal when paired with a reducer to prevent reducer oil from leaking into the motor.
- If there is an unavoidable fluid leakage near the motor, please use motor with better IP ratings.
- Make sure power cable and encoder cable is facing downwards to make sure fluid doesn't leak into the ports.
- Avoid the usage of motor in water/oil leaking prone environment.

Cable under stress

- Do not the bend the cable especially at each ends of the connectors.
- Make sure to not let the cables be too tight and under tremendous stress especially thinner cables such as signal cables.

Connectors

- Please to remove any conductive foreign objects from the connectors before installation
- The connectors are made of resin. May not withstand impact.
- Please hold the driver during transportation, not the cables.
- Leave enough “bend” on the connector cables to ensure less stress upon installation.

Encoder & coupling

- During installation or removal of coupling, please do not hit the motor shaft with a hammer as it would cause damage to internal encoder.
- Please make sure to centralize the motor shaft and coupling, it might cause damage to motor or encoder due to vibration.
- Please make sure axial and radial load is within the limits specified as it might affect the lifespan of the motor or cause damage to it.

2.3 EL7-PN Wiring Diagram

EL7-PN 220V series AC servo drive wiring connection

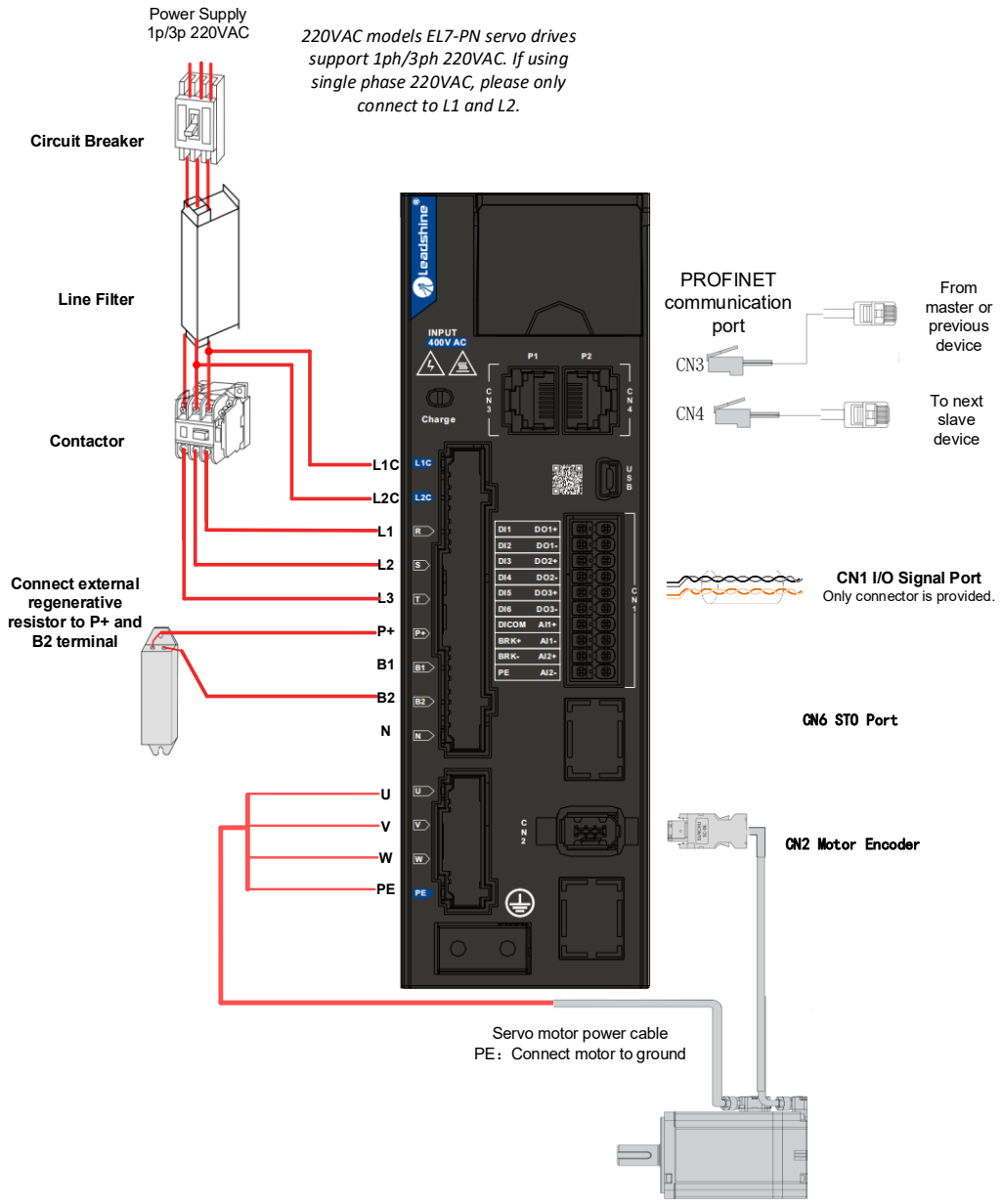

- Please use a circuit breaker for the main power supply to prevent damage to the product or machine.
- Please do not use a contactor in connection to servo motor as it may not withstand a sudden surge of operating voltage.
- Please take note of the capacity when connect to a 24VDC switching power supply, especially if power supply is shared between multiple components. Insufficient supply current will cause failure in holding brake functions.

EL7-PN 220VAC Electrical Wiring Diagram

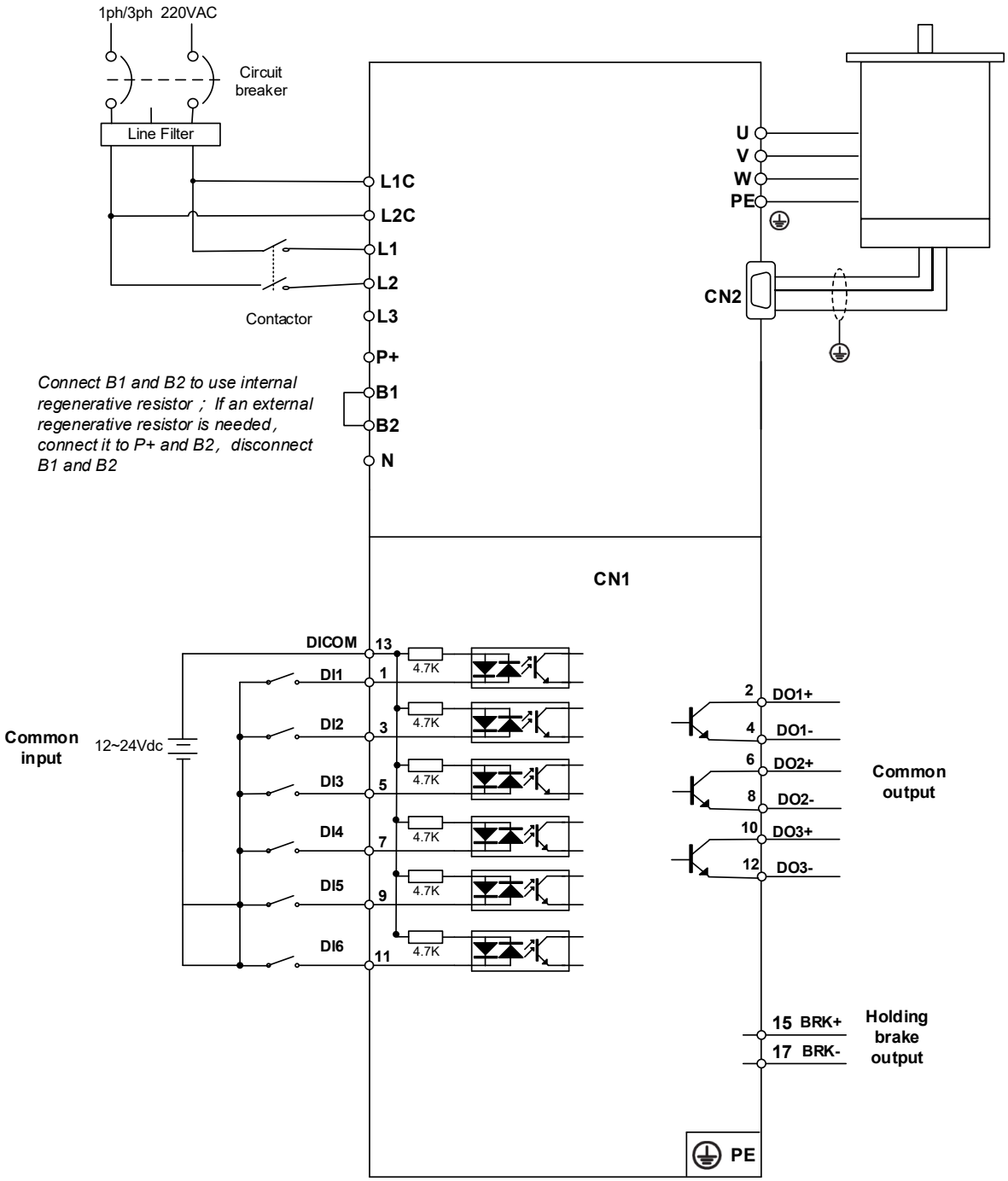

EL7-PN 380VAC Electrical Wiring Diagram

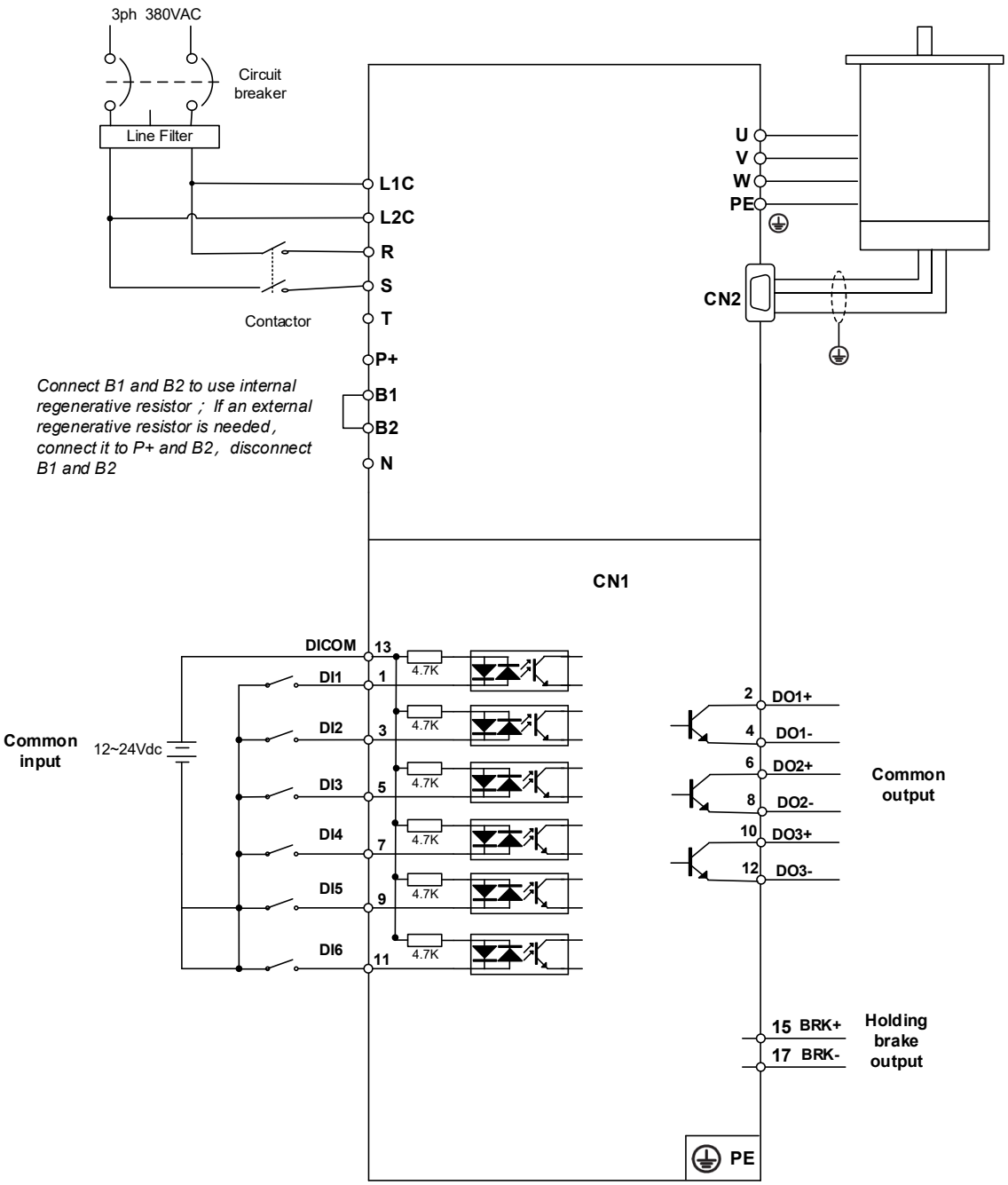

2.4 Servo Drive Ports

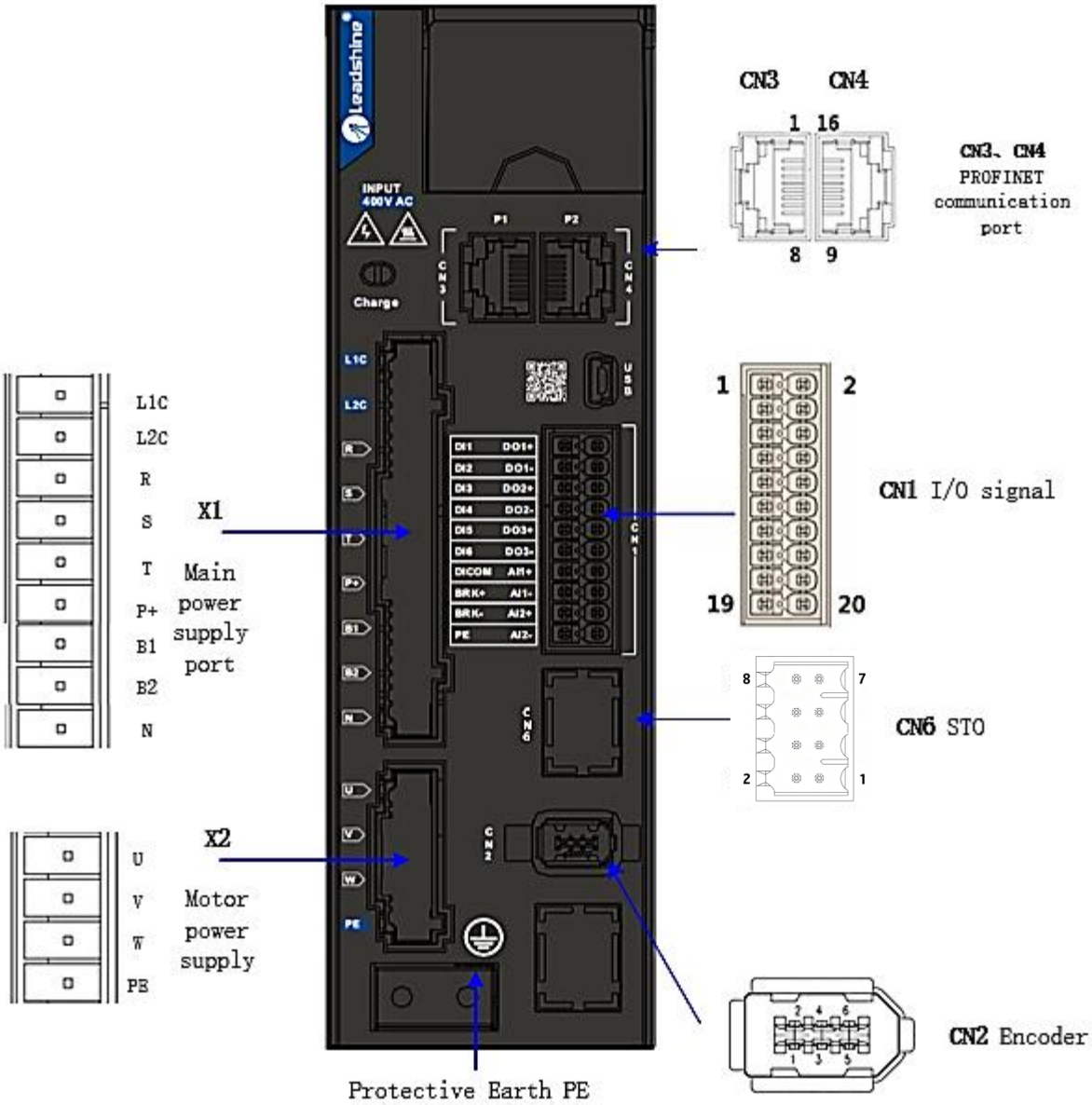

Port	Function
CN1	I/O Signal Port
CN2	Encoder port
USB	USB mini Port
CN3	PROFINET P1 Communication Port; From master or previous device
CN4	PROFINET P2 Communication Port; To next slave device
CN6	Safe Torque Off (STO) Port
X1	Main Power Supply
X2	Motor Power Supply Output Port

2.5 X1 Main power supply

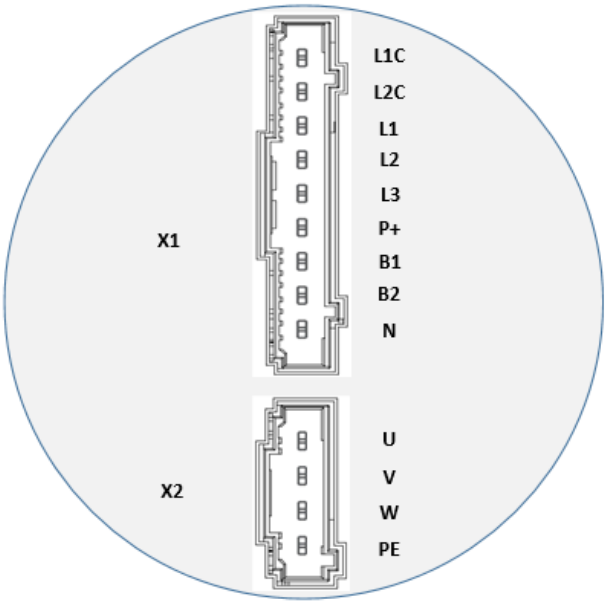

Port	Pin	Functions	Remarks
X1	L1C	Control circuit: Single phase 220VAC, +10～-15%, 50/60Hz	① Optional isolation transformer ② In case of serious interference, it is recommended to connect a line filter to main power supply; *It is recommended to install a fuseless circuit breaker to cut off power supply in time when the driver fails.* **380V models support 3p 380VAC main power supply.*
	L2C		
	R	Main Power Supply: Single phase 220VAC, +10～-15%, 50/60Hz	
	S		
	T		
	P +	① Internal DC bus positive terminal ② External regenerative resistor P terminal	If an external regenerative resistor is required, please disconnect B1 and B2. Connect the external regenerative resistor to terminal P+ and B2.
	B1/B2	External regenerative resistor terminal	
	N	Internal DC bus negative terminal	Please do not connect
	N1		N1 and N2 are connected under normal circumstances. To suppress power supply high harmonics, please disconnected N1 and N2. Connect a DC reactor between N1 and N2.
	N2		
	U	Motor U terminal	Please ensure proper wire connection on motor.
	V	Motor V terminal	
	W	Motor W terminal	
	PE	Motor Protective Earth	Please ground PE of driver and motor together

2.5.1 Regenerative resistor selection and connections

The use of regenerative resistor

When the motor opposes the direction of rotation as in deceleration or vertical axis escalation, part of the regenerative energy will be delivered back to the driver. This energy will first be stored in internal capacitors of the driver. When the energy stored in the capacitors reach the maximum capacity, a regenerative resistor is required the excessive energy to prevent over-voltage.

Selection of regenerative resistor

Model no.	Internal resistance (Ω)	Internal resistor power rating (W)	Minimum resistance (Ω)	Minimum power rating (W)
EL7-PN400F	100	50	50	50
EL7-PN750F	50	75	40	50
EL7 -PN1000F	50	100	30	100
EL7-PN750FT	100	100	100	100
EL7-PN1000FT	100	100	100	100
EL7-PN1500FT	100	100	100	100
EL7-PN2000FT	50	100	40	100
EL7-PN3000FT	50	100	40	100
EL7-PN4400FT	35	100	35	100
EL7-PN5500FT	35	100	25	100
EL7-PN7500FT	35	100	25	100

Calculation of regenerative resistance under normal operation

Steps:
1. Determine if driver comes with a regenerative resistor. If not, please prepare a regenerative resistor with resistance value higher than might be required.
2. Monitor the load rate of the regenerative resistor using front panel (d14). Set the driver on high velocity back and forth motions with high acceleration/deceleration.
3.Please make sure to obtain the value under following conditions: Driver temperature < 60℃, d14<80(Won't trigger alarm), Regenerative resistor is not fuming, No overvoltage alarm(Err120).

Pb(Regenerative power rating) = Resistor power rating x Regenerative load rate (%)

Please choose a regenerative resistor with power rating Pr about **2-4 times the value of Pb** in considered of harsh working conditions and some 'headroom'.
If the calculated Pr value is less than internal resistor power rating, external resistor is not required.

$$R(\text{Max. required regenerative resistance}) = (380^2 - 370^2)/Pr$$

Problem diagnostics related to regenerative resistor:
- If driver temperature is high, reduce regenerative energy power rating or use an external regenerative resistor.
- If regenerative resistor is fuming, reduce regenerative energy power rating or use an external regenerative resistor with higher power rating.
- If d14 is overly large or increasing too fast, reduce regenerative energy power rating or use an external regenerative resistor with higher power rating.

- If driver overvoltage alarm (Er120) occurs, please use an external regenerative resistor with lower resistance or connect another resistor in parallel.

Please take following precautions before installing an external regenerative resistor.
1. Please set the correct resistance value in Pr0.16 and resistor power rating Pr0.17 for the external regenerative resistor.
2. Please ensure the resistance value is higher or equals to the recommended values in table 2-3. Regenerative resistors are generally connected in series but they can also be connected in parallel to lower the total resistance.
3. Please provided enough cooling for the regenerative resistor as it can reach above 100℃ under continuous working conditions.
4. The min. resistance of the regenerative resistor is dependent on the IGBT of the holding brake. Please refer to table

Theoretical selection of regenerative resistor

Without external loading torque, the need for an external regenerative resistor can be determined as the flow chart below

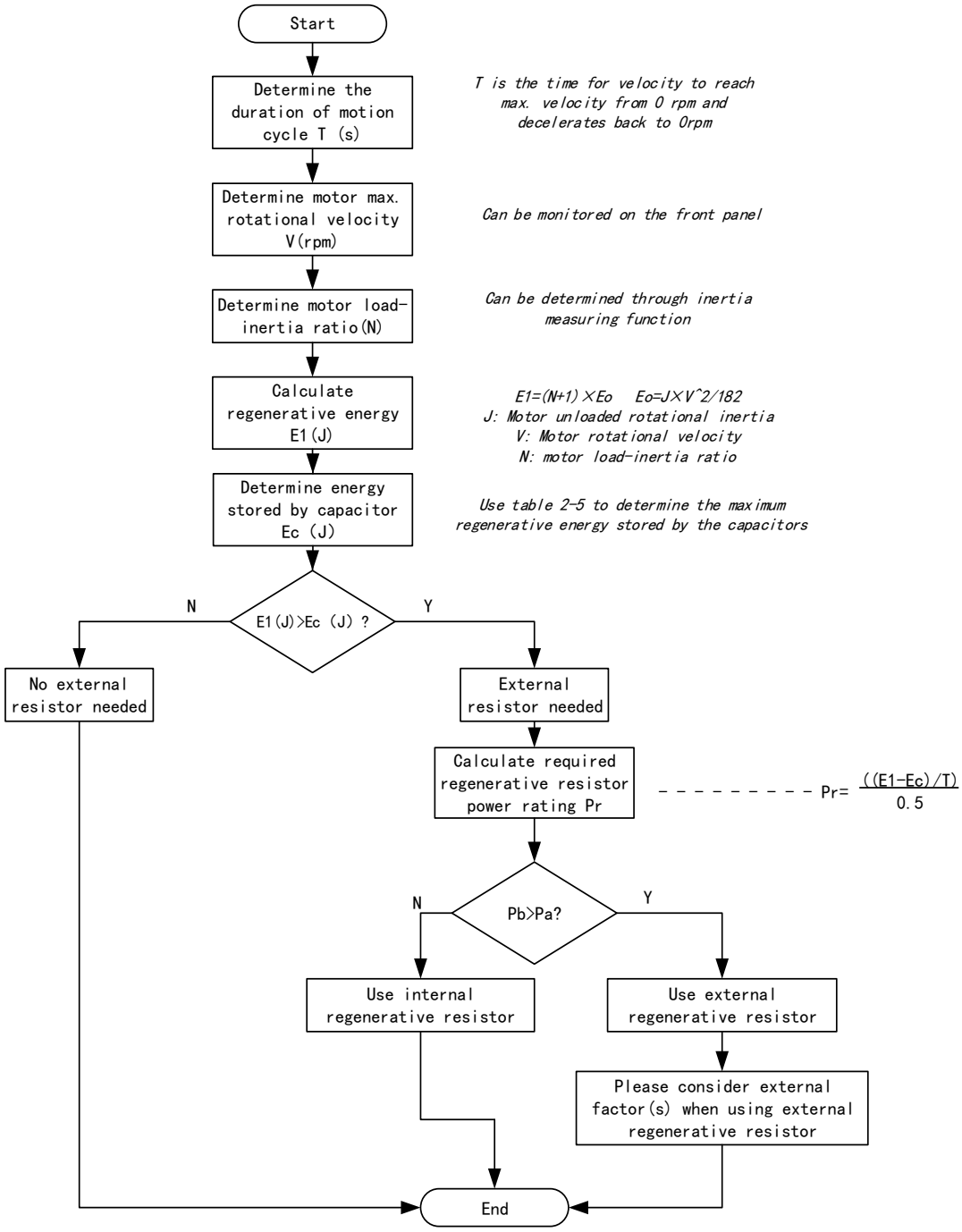

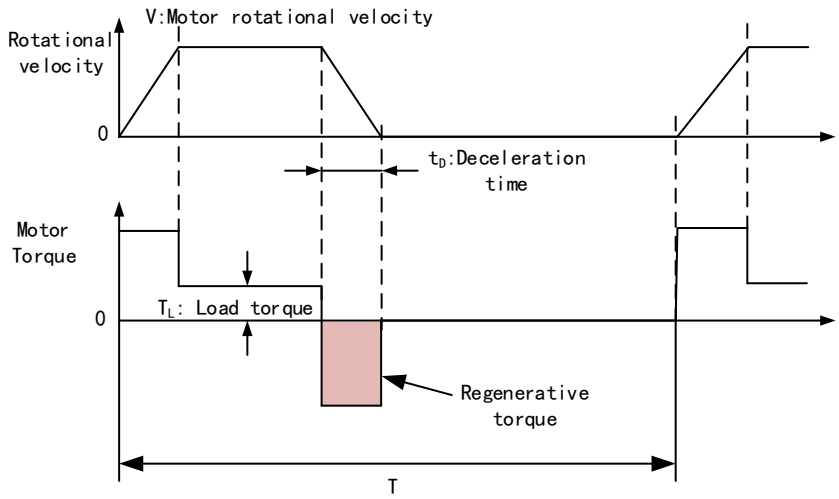

Steps	Calculation	Symbol	Formula
1	Servo system regenerative energy	E1	$E1=(N+1)\times J\times V^2/182$
2	Depleted energy from loss of load system during acceleration	E_L	$E_L = (\pi/60)\ V\times T_L\times tD$ *If loss is not determined, please assume E_L = 0.*
3	Depleted energy due to motor coil resistance.	E_M	$E_M=(U^2/R)\times tD$ R= coil resistance, U = operating voltage *If R is not determined, please assume E_M = 0.*
4	Energy stored by internal DC capacitors	Ec	Please refer to table 2-5
5	Depleted energy due to regenerative resistance	E_K	E_K=E1-(EL+EM+EC), If loss is ignored, EK=E1-EC
6	Required power rating of regenerative resistor	Pr	$Pr=E_K/(0.5\times T)$

Internal capacitor capacity and rotor inertia

EL7-PN Drivers	Servo motor	Rotor Inertia（$\times 10^{-4}$kg.m^2）	Max. regenerative energy stored in capacitor Ec(J)
400W	ELM2H-0400LA60	0.58	13.47
750W	ELM2H-0750LA80	1.66	22.85
1000W	ELM2H-1000LA80	1.79	27.74
	ELM2M-1000LB130	8.5	

There are motors with low, medium and high inertia. Different motor models have different rotor inertia. Please refer to servo product catalogue for more information on rotor inertia.

Calculation examples:
Servo drive: EL7-PN750F, Servo Motor: ELM2H-0750LA80. When T = 2s, rotational velocity = 3000rpm, load inertia is 5 times of motor inertia.

EL7-PN Drivers	Servo motor	Rotor Inertia （× 10^{-4}kg.m^2）	Max. regenerative energy stored in capacitor Ec(J)
750W	ELM2H-0750LA80	1.66	22.85

Regenerative energy produced:

$$E1 = \frac{(N+1) \times J \times V^2}{182} = \frac{(5+1) \times 1.66 \times 3000^2}{182} = 49.3J$$

If E1<Ec, internal capacitors can't take in excessive regenerative energy, regenerative resistor is required.
Required regenerative resistor power rating Pr:

$$Pr = \frac{(E1 - Ec)}{0.5T} = \frac{49.3 - 22.85}{0.5 \times 2} = 26.45W$$

Hence, with the internal regenerative resistor Pa = 75W, Pr<Pa, no external regenerative resistor is required.

Let's assume if the load inertia is 15 times of motor inertia, Pr = 108.6W, Pr>Pa, external regenerative resistor is required. And to consider for harsh working environment,

Pr(external)=108.6/(1-40%)=181 W

When selecting the resistance of the regenerative resistor, please be higher than the minimum value recommended in table 2-3 but lower than Rmax

Rmax =(380^2-370^2)/Pr=7500/108.6=69Ω

In conclusion, a regenerative resistor with resistance 40Ω - 70Ω and power rating 110W to 180W can be chosen.

Please take note that theoretical calculations of the regenerative resistance is not as accurate as calculations done under normal operation.

Connection of a regenerative resistor

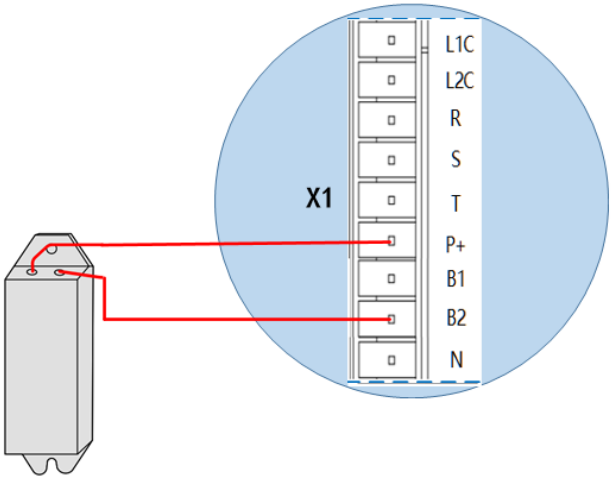

2.5.2 Wire Gauge for Main Power Supply

Driver	Wire diameter (mm^2/AWG)			
	L1 L2/R S T	P+ BR	U V W	PE
EL7-PN400F	0.81/AWG18	2.1/AWG14	1.3/AWG16	2.1/AWG14
EL7-PN750F	0.81/AWG18	2.1/AWG14	1.3/AWG16	2.1/AWG14
EL7-PN1000F	0.81/AWG18	2.1/AWG14	2.1/AWG14	2.1/AWG14
EL7-PN750FT	1.3/AWG16	2.1/AWG14	1.3/AWG16	2.1/AWG14
EL7-PN1000FT	2.1/AWG14	2.1/AWG14	2.1/AWG14	2.1/AWG14
EL7-PN1500FT	2.1/AWG14	2.1/AWG14	2.1/AWG14	2.1/AWG14
EL7-PN2000FT	2*0.75/AWG18	1.5/AWG16	3*1.5/AWG16	1.5/AWG16
EL7-PN3000FT	2*0.75/AWG16	1.5/AWG16	3*1.5/AWG16	1.5/AWG16
EL7-PN4400FT	2*0.75/AWG16	4.0/AWG12	3*4.0/AWG12	4.0/AWG12
EL7-PN5500FT	2*0.75/AWG14	4.0/AWG12	3*4.0/AWG12	4.0/AWG12
EL7-PN7500FT	2*0.75/AWG12	4.0/AWG12	3*4.0/AWG12	4.0/AWG12

- Grounding: Grounding wire should be thicker. Ground PE terminal of servo drive and servo motor together with resistance <100 Ω.
- A 3-phase isolation transformer is recommended to lessen the risk of electrocution
- Connect a line filter to power supply to reduce electromagnetic interference.
- Please install a fuseless circuit breaker to cut off power supply in time when the driver fails.

2.5.3 Holding brake wiring diagram

Holding brake is activated when servo drive is not powered on to prevent axis from moving due to gravitational pull or other external forces by locking the motor in place. Usually used on axis mounted vertically to the ground so that the load would not drop under gravitational force when the driver is powered off or when alarm occurs.

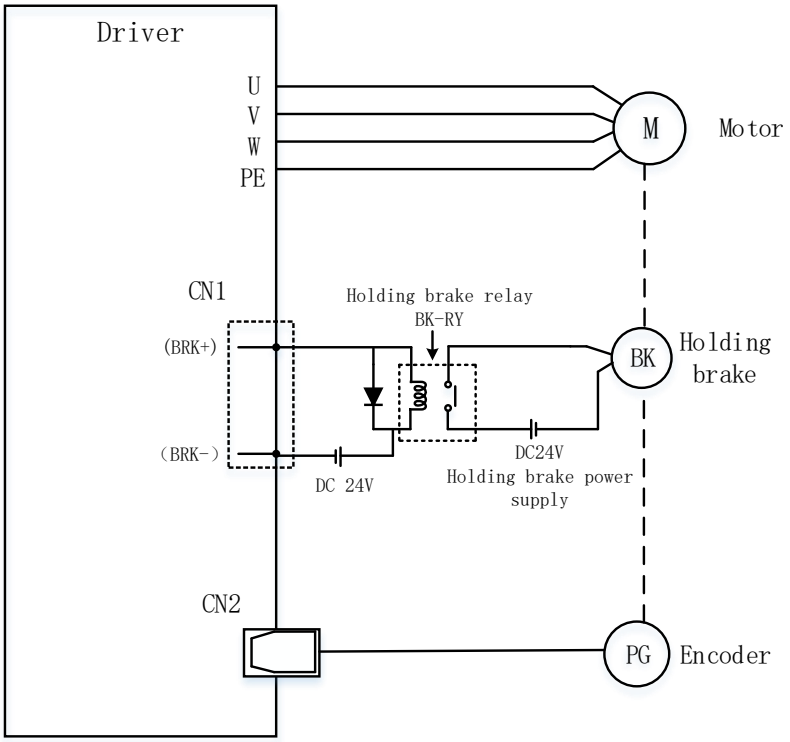

2.5.4 Cable selection for motor with holding brake

Aviation connector（Frame size 80 or below）CABLE-RZSH*M*-113-TS Winding cable with holding brake

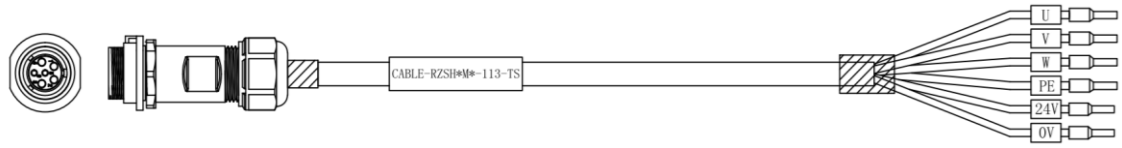

Motor side　　Driver side

Motor cable pin	Pins
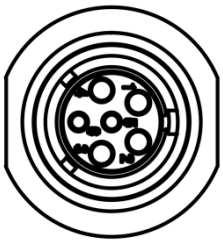 Motor side	

Motor	Color	Driver
1	Blue	U
2	Red	W
3	Black	V
4	Yellow-green	PE
5	Black	0V
6	Red	24V

Direct connector CABLE-RZH*M*-114-TS Winding cable with holding brake

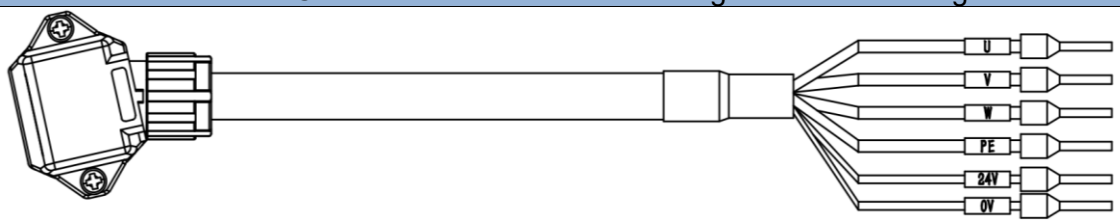

Motor side　　Driver side

Motor cable pin	Pin
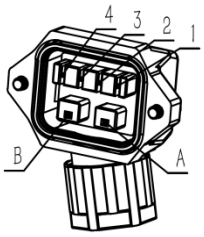	

Motor	Color	Driver
1	Blue	U
2	Black	V
3	Red	W
4	Yellow-green	PE
A	Black	0V
B	Red	24V

- Mechanical noise might exist when motor with holding brake is in operation but it doesn't affect the functionality of the motor.
- When the holding brake circuit is closed (holding brake deactivated), there might be magnetic flux leakage. Please be aware to not use magnetic sensor around motor with holding brake.
- 24V operating voltage for the holding brake has to be ensured to maintain the functionality of the holding brake. Please consider the voltage dropped over lengthy motor cables due to increase in cable resistance.
- It is recommended to have an isolated switching power supply for the holding brake to prevent malfunctioning of the holding brake in case of voltage drop.

For updated information, please refer to our model selection catalogue.

To fix wire cables into connector

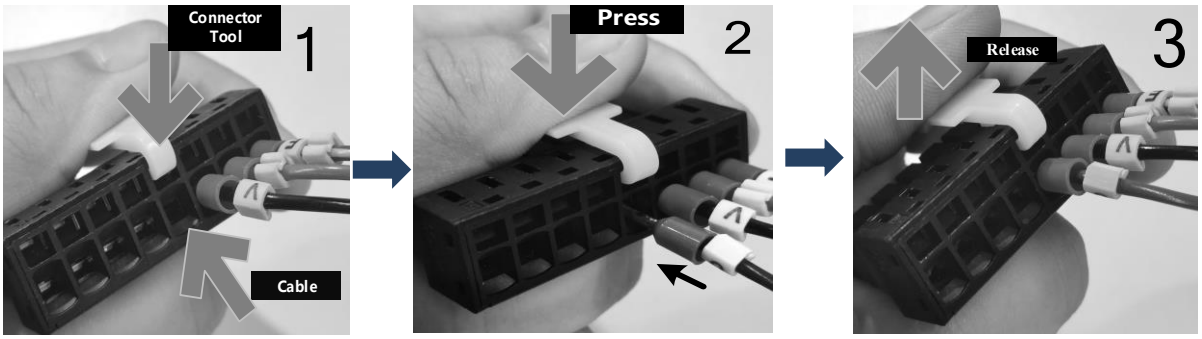

2.6 Motor Power Supply X2

Pin	Label	Description	Remarks
U	U terminal	To motor U terminal	① Please make sure U, V, W terminals of driver and motor are correctly connected. ② Connect motor PE to driver PE and ground.
V	V terminal	To motor V terminal	
W	W terminal	To motor W terminal	
PE	PE	Motor frame	

2.6.1 Motor power cable selection

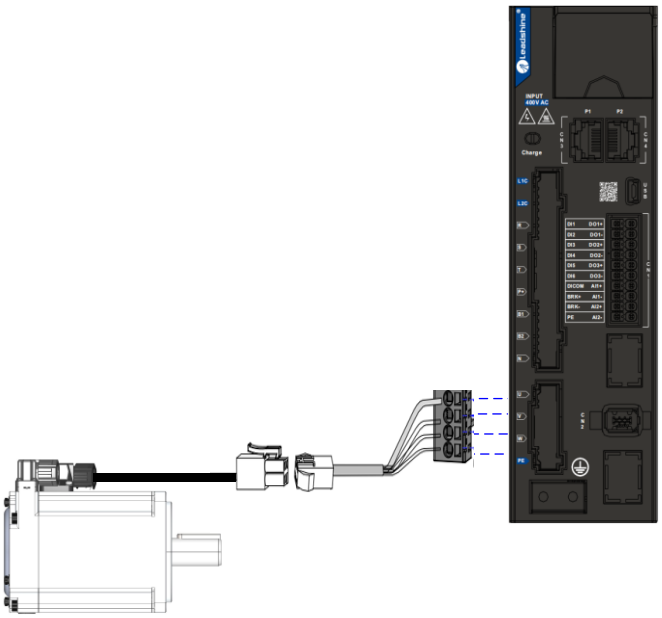

Example of motor power cable connection using an AMP electrical connector

Motor winding power cable

- Wire length available: 1.5m, 3m and 5m
- Connectors type available: Aviation connectors, direct connectors (recommended)
- Please contact Leadshine sales team or any Leadshine certified local retailers for any customized needs.

**M*: Length of the cable*

Aviation connector（Frame size 130）CABLE-RZ*H(V1.1/V2.0)

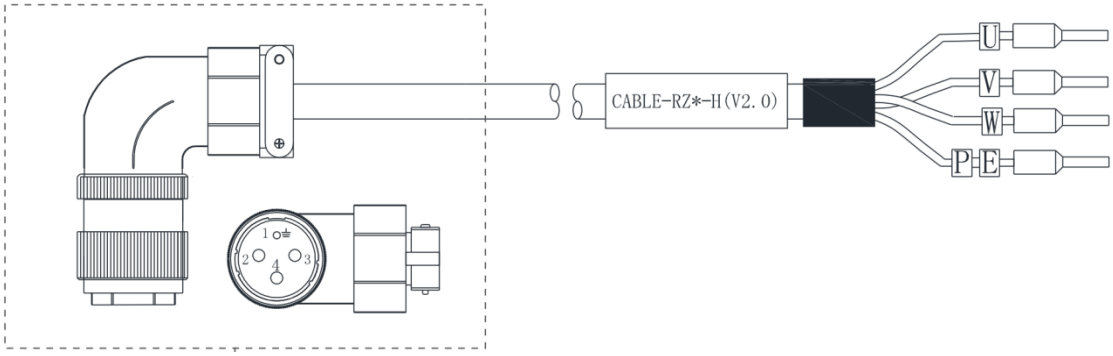

Motor side　　Driver side

Motor cable pin	Pins
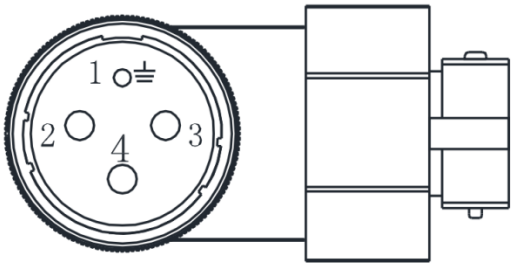 Motor side	

Motor	Color	Driver
1	Red	U
3	Green	V
2	Black	W
4	Yellow	PE

Direct connector(Frame size 80 or below）CABLE-RZH*M*-114-TS *without holding brake*

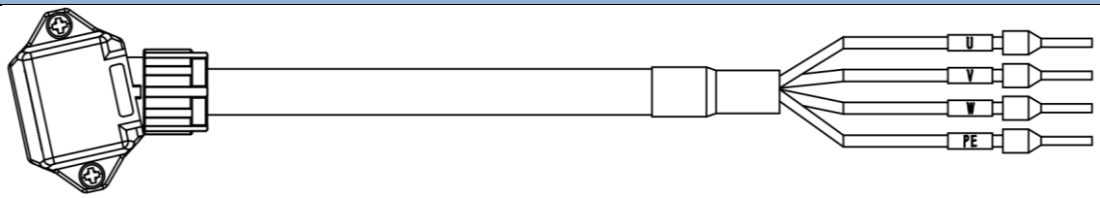

Motor side　　Driver side

Driver cable pin	Pins
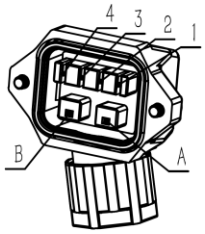	

Motor	Color	Driver
1	Blue	U
2	Black	V
3	Red	W
4	Yellow-green	PE

2.7 CN1 I/O signals port

CN1 port uses a 20-pin spring terminal block connector.

Port	Pin	Signal	Description	Remarks
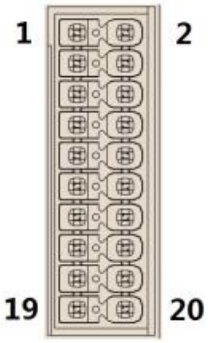	13	DICOM	Common DI	1. Double-ended digital input 2. Configurable input signals 3. Recommended voltage range: 12-24VDC
	1	DI1	Digital input 1	
	3	DI2	Digital input 2	
	5	DI3	Digital input 3	
	7	DI4	Digital input 4	
	9	DI5	Digital input 5	
	11	DI6	Digital input 6	
	2	DO1＋	Digital output 1	1. Double-ended outputs 2. Configurable output signals 3. Pull-up voltage: 12-24VDC, current: 10mA. Max voltage: 30VDC, max current: 50mA
	4	DO1－		
	6	DO2＋	Digital output 2	
	8	DO2－		
	10	DO3＋	Digital output 3	
	12	DO3－		
	14	NC(AI1+)		-
	16	NC(AI1-)		
	18	NC(AI2+)		
	20	NC(AI2-)		
	17	BRK＋	Holding brake positive output terminal	Motor holding brake output
	19	BRK－	Holding brake negative output terminal	
	15	PE	Shield ground	-

2.8 CN2 Motor Encoder

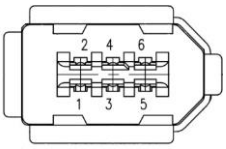

Port	Pin	Signal	Description
CN2	1	VCC5V	Power supply 5V
	2	GND	Power supply ground
	3	BAT+	Battery positive terminal
	4	BAT-	Battery negative terminal
	5	SD+	SSI Data+
	6	SD-	SSI Data-
	Frame	PE	Shield grounding

Pin terminals on motor side

Driver side (1394 6PIN)	Pin	Motor side		
		Frame 80 or below	Frame 130	Frame 130 (850w,1300w,1800w)
Frame		1（Shielding）	1（Shielding）	1（Shielding）
1	5V	2	2	7
2	0V	3	3	5
5	SD+	4	4	6
6	SD-	5	5	4
（3）	BAT+	(6)	(6)	（3）
（4）	BAT-	(7)	(7)	（2）
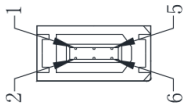			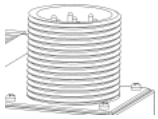	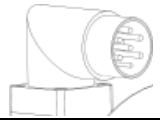

- Please ground both driver and motor PE terminals to avoid any servo alarms.
- It is recommended to use a shielded twisted pair cable not longer than 20m.
- Please leave a space of min. 30cm between motor power cable and encoder to avoid interference.

2.8.1 Cable selection for I/O signal port CN1 and motor encoder port CN2

I/O signal cable

To ensure I/O signal to not be affected by electromagnetic interference, a **shielded twisted pair cable** is recommended for this application.

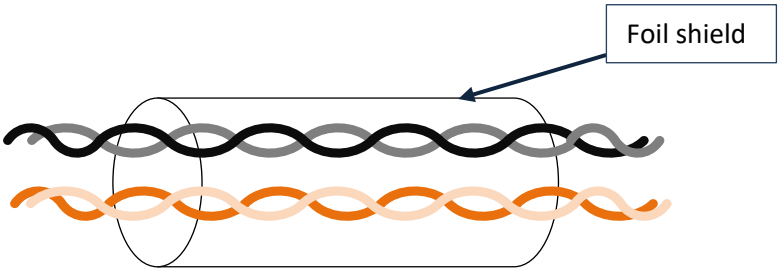

Diameter: Recommended to use stranded and shielded cable. For CN1, ≥0.14mm^2, CN2≥0.25mm^2, shielding layer needs to be grounded.
Length: Cable length should be as short as possible. No more than 3m for CN1 and 20m for CN2.
Placement: Place the cable away from power cables.

- Install a surge suppressor in feedback circuit; flyback diode inversely connected in parallel in DC coil and capacitor connected in parallel in AC coil.
- I/O signal included DI, DO and relay output signal
- Please keep 30cm away from main power supply cable or motor power cable to avoid electromagnetic interference.

2.8.2 Motor encoder cable and connector selection

Aviation connector（Frame size 130）CABLE-7BM*HZ(V3.0)

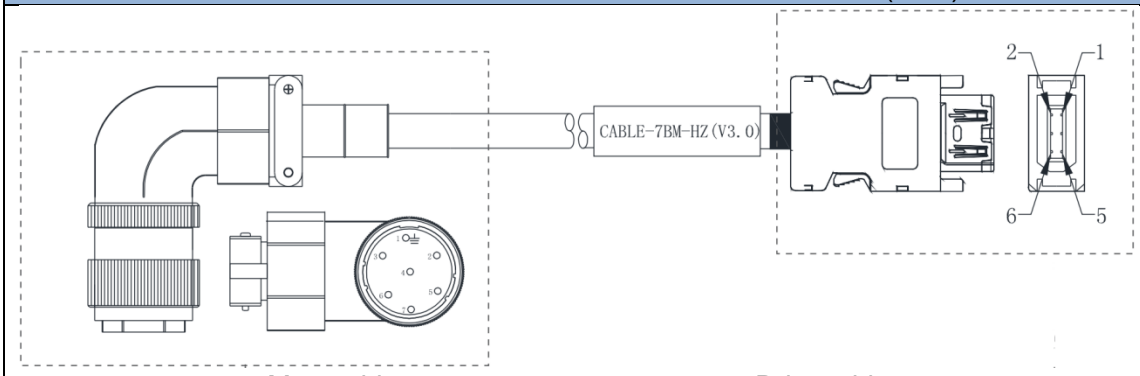

Motor side　　Driver side

Motor cable pin	Pin

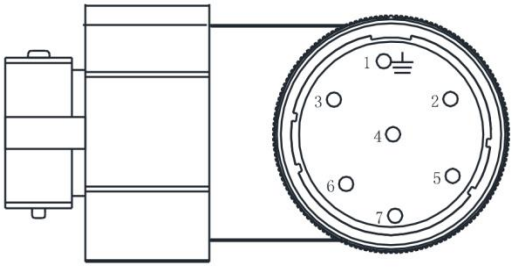

Motor side

Motor	Driver	Signal
1	Frame	Shielded
2	1	+5V
3	2	0V
4	5	SD+
5	6	SD-
6	3	BAT+
7	4	BAT-

Direct connector(Frame size 80 or below）CABLE-BMH*M*-114-TS Incremental encoder

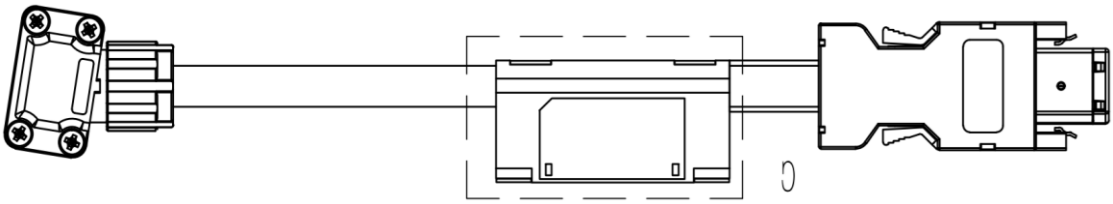

Motor side　　Driver side

Motor cable pin	Pin

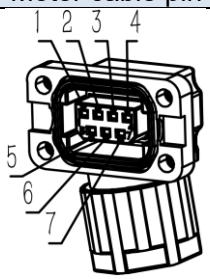

Motor side

Motor	Driver	Signal
1	Frame	Shielded
2	1	+5V
3	2	0V
4	5	SD+
5	6	SD-

Direct connector(Frame size 80 or below）CABLE-BMAH*M*-124-TS Absolute encoder

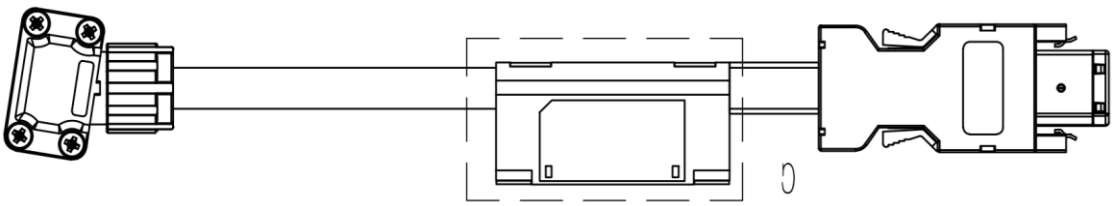

Motor cable pin	Pin
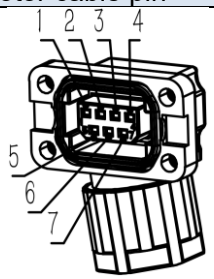 Motor side	

Motor	Driver	Signal
1	Frame	Shielded
2	1	+5V
3	2	0V
4	5	SD+
5	6	SD-
6	3	BAT+
7	4	BAT-

2.9 CN3/CN4 PROFINET Communication Port

CN3(P1) connects from master controller or from previous slave device and CN4(P2) connects to the next slave device.

Port	Pin	Signal	Description
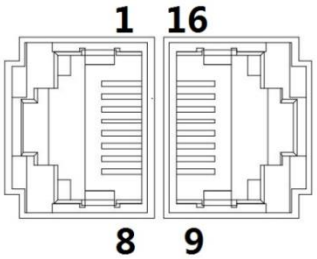	1, 9	P_TX+	PROFINET Data sending positive terminal
	2, 10	P_TX-	PROFINET Data sending negative terminal
	3, 11	P_RX+	PROFINET Data receiving positive terminal
	4, 12	--	--
	5, 13	--	--
	6, 14	P_RX-	PROFINET Data receiving negative terminal
	7, 15	--	--
	8, 16	--	--
	Frame	PE	Shielded ground

2.10 CN6 Safe Torque Off (STO) Port

Port	Pin	Signal	Description	Remarks
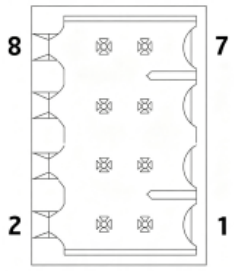	1	24V	24v power supply	Connect to SF1 and SF2 when not in use. Do not use to supply power.
	2	0V	Reference ground	
	3	SF1+	Control signal 1 positive input	When SF1 = OFF or SF2 = OFF,STO is enabled.
	4	SF1-	Control signal 1 negative input	
	5	SF2+	Control signal 2 positive input	
	6	SF2-	Control signal 2 negative input	
	7	EDM ＋	External monitoring device (EDM) with differential double ended output	When SF1 = OFF or SF2 = OFF,EDM = ON
	8	EDM —		

Introduction to Safe Torque Off (STO)

Function: Cut off motor current supply physically (through mechanical means)

STO module (CN6 connector) consists of 2 input channels. It cuts off the motor current supply by blocking of PWM control signal from the power module. When the motor current is cut off, the motor will still move under inertia and stops gradually.

The STO function is set up ready to be used by factory default. Please remove STO connector if it is not needed.

STO functional principle

STO module cuts off the motor current supply and stops motor gradually by blocking of PWM control signal from the power module through 2 isolated circuits. When a STO error occurs, the actual status of STO can be determined by the EDM status feedback.

SF1 Input Status	SF2 Input Status	EDM Output Status	PWM control signal	Alarm code
ON	ON	OFF	Normal	-
ON	OFF	OFF	Blocked	Er 1c2
OFF	ON	OFF	Blocked	Er 1c1
OFF	OFF	ON	Blocked	Er 1c0

STO wiring diagram

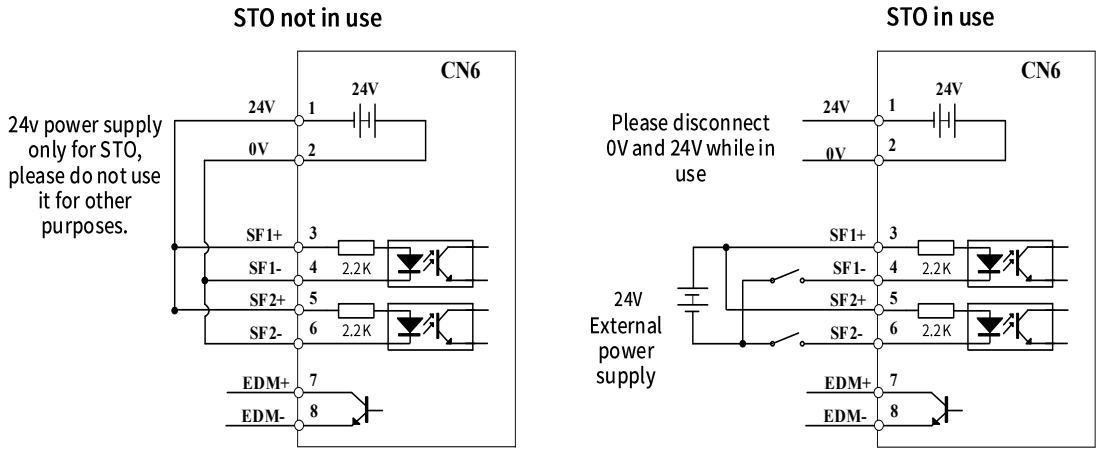

- *Please take precautions when enabling STO functions as servo drive will lose control over the motion of the motor. Motor might dropped under gravitational pull (vertically mounted load) or moved when external forces are applied to it. Alternatively, motor with holding brake can be chosen.*
- *STO is not meant to cut off the power supply of the servo drivers and motors completely. Please power off and wait for a few minutes before starting maintenance work.*
- *It is recommended to use an isolated power supply for STO signal input as any current leakage might cause STO malfunction.*

2.11 USB mini Tuning Port

EL7-PN series servo drives can be connected to a PC using the USB mini communication port for data monitoring and parameters setting on Motion Studio. Please connect to main power supply before tuning the driver. If users are having interference problem connecting to PC, please try using a magnetic ring.

Connector	Port	Pin	Signal	Description
USB mini	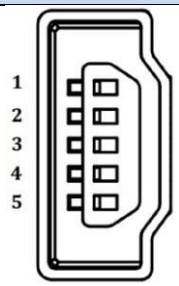	1	VCC5V	Power supply 5V
		2	D+	USB data positive terminal
		3	D-	USB data negative terminal
		4	--	--
		5	GND	Power supply ground
		Frame	USB_GND	Ground through capacitor

2.12 I/O signals

2.12.1 Common input circuit

The internal circuit of common input is a bidirectional optocoupler which supports common anode and common cathode configurations. There are 2 types of outputs from master device: Relay output and Open Collector output as shown below.

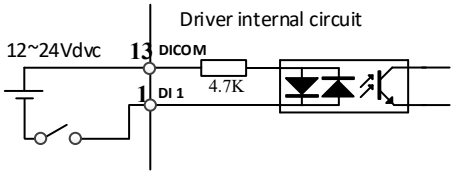

① Output from master device: Relay

Common anode:

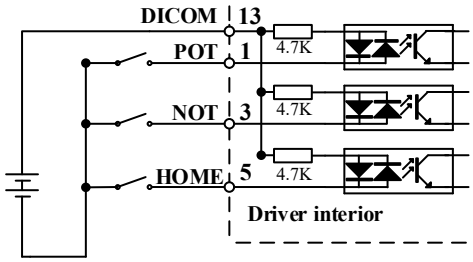

Common cathode:

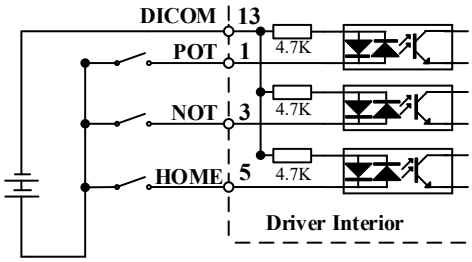

② Output from master device: Open Collector

NPN configuration:

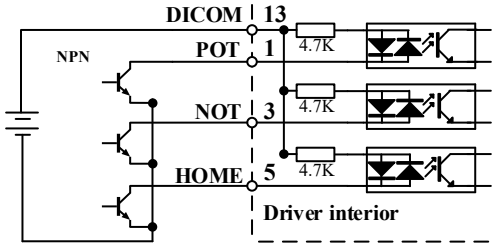

PNP configuration:

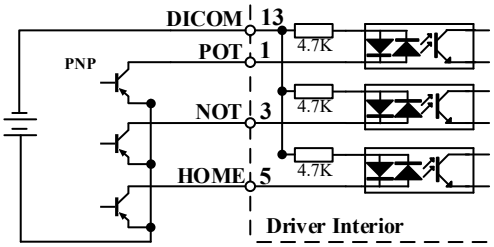

Please prepare switching power supply with output of 12-24VDC, current≥ 100mA;

2.12.2 Common output circuit

There are 3 common outputs: all 3 outputs are double-ended which can be connected to an independent power source.

Double-ended DO3+ & DO3-

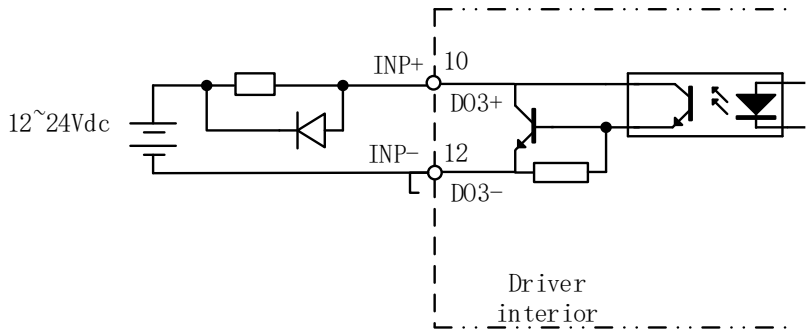

- Power supply is provided by user. Please be aware that reversed power supply polarity might cause damage to the driver.
- When it is an open collector output, max current: 50mA, max supplying voltage: 25V. Please ensure the switching power supply fulfills the conditions.
- If the load is an inductive load such as a relay, please connect a flyback diode in parallel in reverse. A wrong installation of the flyback diode might cause damage to the driver.

2.12.3 DI signal function configuration

CN1 Pin	Signal	Parameter	Default function	Factory default		
				Set value	Polarity	Status
1	DI1	Pr4.00	Null, user-configurable	0x0	NO	OFF
3	DI2	Pr4.01	Positive limit switch (POT)	0x1	NO	OFF
5	DI3	Pr4.02	Negative limit switch (NOT)	0x2	NO	OFF
7	DI4	Pr4.03	Home switch (HOME)	0x16	NO	OFF
9	DI5	Pr4.05	Null, user-configurable	0x0	NO	OFF
11	DI6	Pr4.06	Null, user-configurable	0x0	NO	OFF

***NO: Normally Open*

<u>Normally Open(NO) and Normally Close(NC)</u>

Polarity = NO, Signal input disconnected, Status = OFF
Signal input connected, Status = ON
Polarity = NC, Signal input disconnected, Status = OFF
Signal input connected, Status = ON

Safety precaution

When using mechanical limits or emergency stop function, please set POT, NOT and E-STOP as NC.

Related parameters

Pr4.00	**Label**	Input selection DI1			**Mode**					**F**
	Range	0x0~0xFF	**Unit**	—	**Default**	0x0	**PNU**		5000	
	Activation	Immediate								
Pr4.01	**Label**	Input selection DI2			**Mode**					**F**
	Range	0x0~0xFF	**Unit**	—	**Default**	0x1	**PNU**		5001	
	Activation	Immediate								
Pr4.02	**Label**	Input selection DI3			**Mode**					**F**
	Range	0x0~0xFF	**Unit**	—	**Default**	0x2	**PNU**		5002	
	Activation	Immediate								
Pr4.03	**Label**	Input selection DI4			**Mode**					**F**
	Range	0x0~0xFF	**Unit**	—	**Default**	0x16	**PNU**		5003	
	Activation	Immediate								
Pr4.04	**Label**	Input selection DI5			**Mode**					**F**
	Range	0x0~0xFF	**Unit**	—	**Default**	0x0	**PNU**		5004	
	Activation	Immediate								
Pr4.05	**Label**	Input selection DI6			**Mode**					**F**
	Range	0x0~0xFF	**Unit**	—	**Default**	0x0	**PNU**		5005	
	Activation	Immediate								

Digital input DI allocation using hexadecimal system

Input	**Symbol**	**Set value**	
		Normally open	**Normally close**
Invalid	—	0h	-
Positive limit switch	POT	1h	81h
Negative limit switch	NOT	2h	82h
Clear alarm	A-CLR	4h	-
Forced alarm	E-STOP	14h	94h
Home switch	HOME-SWITCH	16h	96h

- Please don't set anything other than listed in table above.
- Normally open: Valid when input = ON Normally close: Valid when input = OFF
- Er210 might occur if same function is allocated to different channels at the same time
- Channel that has no value doesn't affect driver motion.
- Front panel is of hexadecimal system.
- Pr4.00 – Pr4.05 corresponds to DI1 – DI6.

2.12.4 DO signal function configuration

CN1 Pin	Signal	Parameter	Default function	Factory default		
				Set value	Polarity	Status
2/4	DO1	Pr4.10	Alarm（ALM）	0x01	NO	OFF
6/8	DO2	Pr4.11	Servo Ready(SRDY)	0x02	NO	OFF
10/12	DO3	Pr4.12	Positioning completed(INP)	0x04	NO	OFF

***NO: Normally Open*

Normally Open(NO) and Normally Close(NC)
Polarity = NO, Signal input disconnected, Status = OFF
Signal input connected, Status = ON
Polarity = NC, Signal input disconnected, Status = OFF
Signal input connected, Status = ON

Related parameters

Pr4.10	Label	Output selection DO1			Mode					F
	Range	0x0~0xFF	Unit	—	Default	0x1	PNU		5010	
	Activation	Immediate								
Pr4.11	Label	Output selection DO2			Mode					F
	Range	0x0~0xFF	Unit	—	Default	0x3	PNU		5011	
	Activation	Immediate								
Pr4.12	Label	Output selection DO3			Mode					F
	Range	0x0~0xFF	Unit	—	Default	0x4	PNU		5012	
	Activation	Immediate								

Digital output DO allocation using hexadecimal system.

Output	Symbol	Set value	
		Normally open	Normally close
Master device control	—	00h	-
Alarm	ALM	01h	81h
Servo-Ready	S-RDY	02h	82h
External brake released	BRK-OFF	03h	83h
Positioning completed	INP	04h	84h
At-speed	AT-SPEED	05h	85h
Torque limit signal	TLC	06h	86h
Zero speed clamp detection	ZSP	07h	87h
Velocity coincidence	V-COIN	08h	88h
Position command ON/OFF	P-CMD	0Bh	8Bh
Velocity limit signal	V-LIMIT	0Dh	8Dh
Velocity command ON/OFF	V-CMD	0Fh	8Fh
Servo status	SRV-ST	12h	92h

Homing done	HOME-OK	22h	A2h

Please don't set any other than the outputs listed in the table above.

- Normally open：Active low
- Normally close：Active high
- Front panel is of hexadecimal system.
- Pr4.10 – Pr4.12 corresponds to DO1 – DO3. If all parameters are set to 0, master device controls the outputs, object dictionary 0x60FE sub-index 01 bit16-18 corresponds to DO1-DO3.

2.13 Measures against electromagnetic interference

To reduce interference, please take the following measures:

- I/O signal cable > 3m; Encoder cable > 20m
- Use cable with larger diameter for grounding
  ①Grounding resistance > 100Ω
  ②When there are multiple drivers connected in parallel, PE terminal of the main power supply and ground terminal of servo drives must be connected to copper ground bar in the electrical cabinet and the copper ground bar needs to be connected to the metal frame of the cabinet.
- Please install a line filter on main power supply cable to prevent interference from radio frequency.
- In order to prevent malfunctions caused by electromagnetic interference, please take following measures:

  ①Install master device and line filter close to the servo drive

  ②Install surge suppressor for relay and contactor

  ③Please separate signal/encoder cable from power cable with a space of at least 30cm

  ④Install a line filter for the main power supply if a device with high frequency generation such as a welding machine exists nearby

2.13.1 Grounding connection and other anti-interference wiring connections

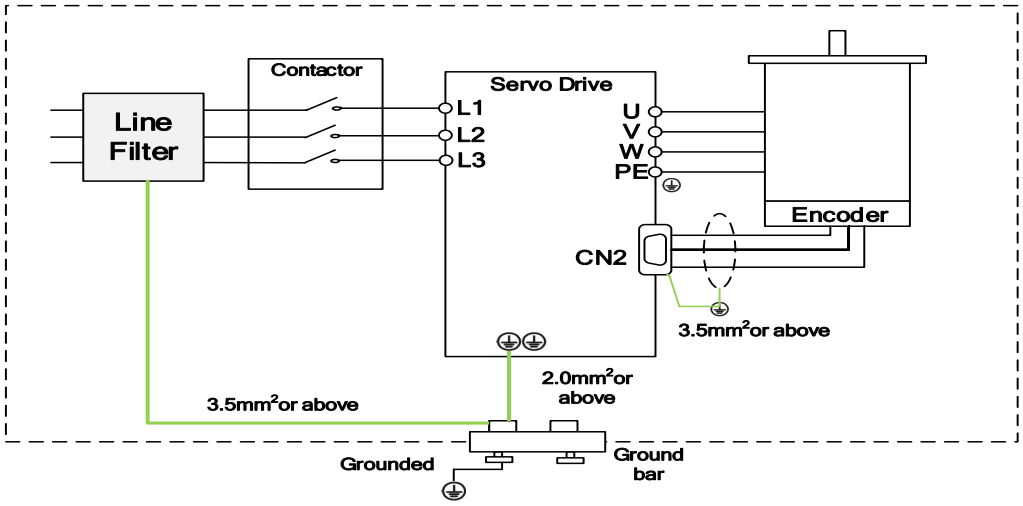

- Servo motor frame should be grounded. Please connect the PE terminal of servo motor and servo drive and ground them together to reduce interference.
- Ground both ends of the foil shield of encoder cable.

2.13.2 Using line filter

To reduce interference from main power supply cable and to prevent from affecting other sensitive components around the servo drive, please choose a line filter based on actual supply current. Please do be aware of the following mistake when installing a line filter.

Do not band the main power supply cable together.

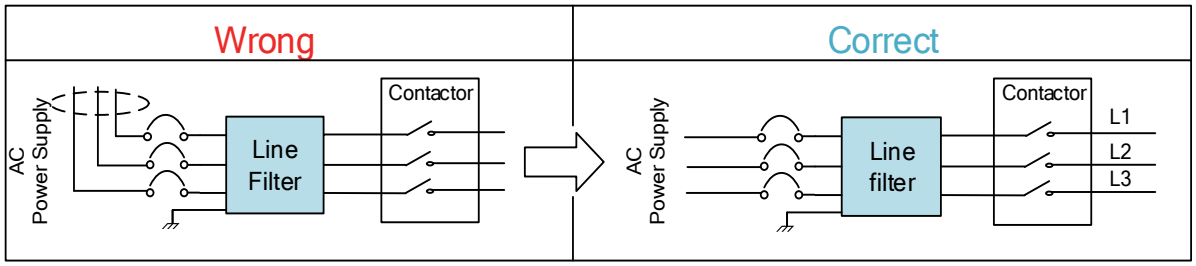

Separate the ground wire from the line filter and the main power supply cable.

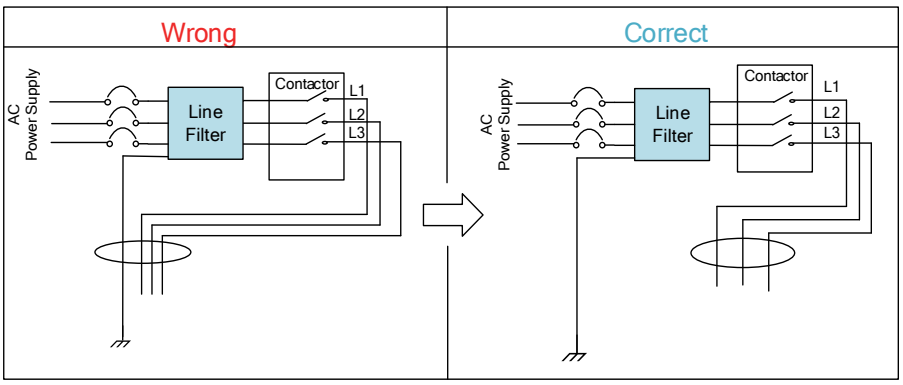

Ground wires inside an electrical cabinet

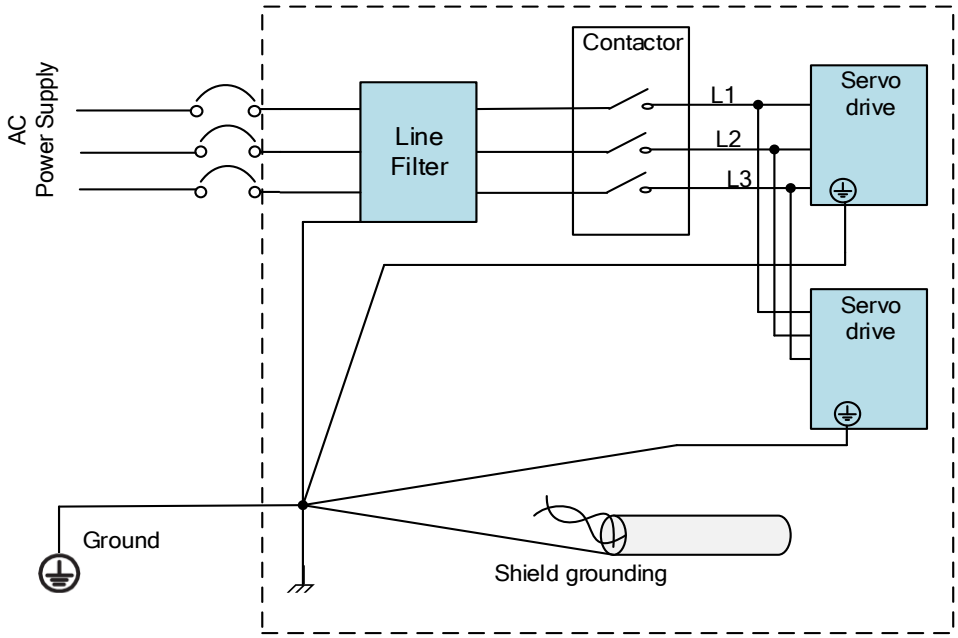

Chapter 3 Parameter

3.1 Parameter List

- Panel Display as follows:

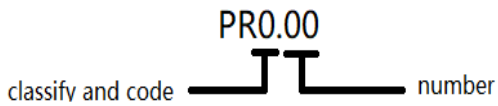

- Parameter Valid mode Description
  F: Valid in all modes

3.1.1 Servo drive parameter

Class	Label	PNU	Panel display	Activation	Valid Mode						
[Class 0] Basic settings	Model-following bandwidth	1000	PR_000	Immediate							F
	Control Mode Settings	1001	PR_001	After restart							F
	Real time Auto Gain Adjusting	1002	PR_002	Immediate							F
	Real time auto stiffness adjusting	1003	PR_003	Immediate							F
	Inertia ratio	1004	PR_004	Immediate							F
	Command polarity inversion	1006	PR_006	After restart							F
	Command pulse counts per revolution	1008	PR_008	After restart							F
	Encoder pulse output per revolution	1011	PR_011	After restart							F
	Pulse output logic inversion	1012	PR_012	After restart							F
	1st Torque Limit	1013	PR_013	Immediate							F
	Excessive Position Deviation Settings	1014	PR_014	Immediate							F
	Absolute Encoder settings	1015	PR_015	After restart							F
	Regenerative resistance	1016	PR_016	Immediate							F
	Regenerative resistor power rating	1017	PR_017	Immediate							F
	Friction compensation setting	1019	PR_019	Immediate							F
	Synchronous compensation time 1	1025	PR_025	After restart							F
	Synchronous compensation time 2	1026	PR_026	After restart							F
	1st position loop gain	2000	PR_100	Immediate							F
	1st velocity loop gain	2001	PR_101	Immediate							F
	1st Integral Time Constant	2002	PR_102	Immediate							F

Class	Label	PNU	Panel display	Activation	Valid Mode						
[Class 1] Gain adjustments	of Velocity Loop										
	1st velocity detection filter	2003	PR_103	Immediate							F
	1st Torque Filter Time Constant	2004	PR_104	Immediate							F
	2nd Position Loop Gain	2005	PR_105	Immediate							F
	2nd velocity loop gain	2006	PR_106	Immediate							F
	2nd Integral Time Constant of Velocity Loop	2007	PR_107	Immediate							F
	2nd velocity detection filter	2008	PR_108	Immediate							F
	2nd Torque Filter Time Constant	2009	PR_109	Immediate							F
	Velocity feed forward gain	2010	PR_110	Immediate							F
	Velocity feed forward filter time constant	2011	PR_111	Immediate							F
	Torque feed forward gain	2012	PR_112	Immediate							F
	Torque feed forward filter time constant	2013	PR_113	Immediate							F
	Position control gain switching mode	2015	PR_115	Immediate							F
	Position control gain switching level	2017	PR_117	Immediate							F
	Hysteresis at position control switching	2018	PR_118	Immediate							F
	Position gain switching time	2019	PR_119	Immediate							F
	Unique registry	2037	PR_137	Immediate							F
	Unique registry 1	2038	PR_138	Immediate							F
[Class 2] Vibration suppression	Adaptive filtering mode settings	3000	PR_200	Immediate							F
	1st notch frequency	3001	PR_201	Immediate							F
	1st notch bandwidth selection	3002	PR_202	Immediate							F
	1st notch depth selection	3003	PR_203	Immediate							F
	2nd notch frequency	3004	PR_204	Immediate							F
	2nd notch bandwidth selection	3005	PR_205	Immediate							F
	2nd notch depth selection	3006	PR_206	Immediate							F
	3rd notch frequency	3007	PR_207	Immediate							F
	3rd notch bandwidth selection	3008	PR_208	Immediate							F
	3rd notch depth selection	3009	PR_209	Immediate							F
	1st damping frequency	3014	PR_214	Immediate							F
	2nd damping frequency	3016	PR_216	Immediate							F
	Position command smoothing filter	3022	PR_222	Stop							F
	Position command FIR filter	3023	PR_223	Disable							F
	5th resonant frequency	3031	PR_231	Immediate							F
	5th resonant Q value	3032	PR_232	Immediate							F

Class	Label	PNU	Panel display	Activation	Valid Mode						
	5th anti-resonant frequency	3033	PR_233	Immediate							F
	5th anti-resonant Q value	3035	PR_234	Immediate							F
	6th resonant frequency	3035	PR_235	Immediate							F
	6th resonant Q value	3036	PR_236	Immediate							F
	6th anti-resonant frequency	3037	PR_237	Immediate							F
	6th anti-resonant Q value	3038	PR_238	Immediate							F
[Class 3] Velocity control	Acceleration time settings	4012	PR_312	Immediate							
	Deceleration time settings	4013	PR_313	Immediate							
	Sigmoid acceleration/deceleration settings	4014	PR_314	Disable							
	Zero speed clamp level	4016	PR_316	Immediate							
	Position mode zero speed	4023	PR_323	Immediate							
	Motor max rotational speed	4024	PR_324	Immediate							F
[Class 4] I/O monitoring settings	Input selection DI1	5000	PR_400	Immediate							F
	Input selection DI2	5001	PR_401	Immediate							F
	Input selection DI3	5002	PR_402	Immediate							F
	Input selection DI4	5003	PR_403	Immediate							F
	Input selection DI5	5004	PR_404	Immediate							F
	Input selection DI6	5005	PR_405	Immediate							F
	Output selection DO1	5010	PR_410	Immediate							F
	Output selection DO2	5011	PR_411	Immediate							F
	Output selection DO3	5012	PR_412	Immediate							F
	Analog input 1 zero drift	5022	PR_422	Immediate							F
	Analog input 1 filter	5023	PR_423	Immediate							F
	Analog input 1 overvoltage	5024	PR_424	Immediate							F
	Analog input 3 zero drift	5028	PR_428	Immediate							F
	Analog input 3 filter	5029	PR_429	Immediate							F
	Analog input 3 overvoltage	5030	PR_430	Immediate							F
	Positioning complete range	5031	PR_431	Immediate							F
	Positioning complete output setting	5032	PR_432	Immediate							F
	INP positioning delay time	5033	PR_433	Immediate							F
	Zero speed	5034	PR_434	Immediate							F
	Velocity coincidence range	5035	PR_435	Immediate							F
	Velocity reached	5036	PR_436	Immediate							F
	Motor power-off delay time	5037	PR_437	Immediate							F
	Delay time for holding	5038	PR_438	Immediate							F

Class	Label	PNU	Panel display	Activation	Valid Mode						
	brake release										
	Holding brake activation velocity	5039	PR_439	Immediate							F
	Emergency stop function	5043	PR_443	Immediate							F
	Holding brake duty cycle	5051	PR_451	Immediate							F
[Class 5] Extension settings	Driver prohibition input settings	6004	PR_504	Immediate							F
	Servo-off mode	6006	PR_506	After restart							F
	Main power-off detection time	6009	PR_509	Immediate							F
	Servo-off due to alarm mode	6010	PR_510	After restart							F
	Servo braking torque setting	6011	PR_511	Immediate							F
	Overload level setting	6012	PR_512	Immediate							F
	Overspeed level settings	6013	PR_513	Immediate							F
	I/O digital filter	6015	PR_515	Immediate							F
	Position unit settings	6020	PR_520	After restart							F
	Torque limit selection	6021	PR_521	Immediate							F
	2nd torque limit	6022	PR_522	Immediate							F
	LED initial status	6028	PR_528	After restart							F
	Torque limit detection time during torque initialization	6037	PR_537	Immediate							F
	3rd torque limit	6039	PR_539	Immediate							F
	D41 set value	6040	PR_540	Immediate							F
[Class 6] Extra settings	Encoder zero position compensation	7001	PR_601	After restart							F
	JOG trial run torque command	7003	PR_603	Immediate							F
	JOG trial run velocity command	7004	PR_604	Immediate							F
	Position 3rd gain valid time	7005	PR_605	Immediate							F
	Position 3rd gain scale factor	7006	PR_606	Immediate							F
	Torque command additional value	7007	PR_607	Immediate							F
	Positive direction torque compensation value	7008	PR_608	Immediate							F
	Negative direction torque compensation value	7009	PR_609	Immediate							F
	Current response settings	7011	PR_611	Immediate							F
	Max. time to stop after disabling	7014	PR_614	Immediate							F
	Trial run distance	7020	PR_620	Immediate							F
	Trial run waiting time	7021	PR_621	Immediate							F
	No. of trial run cycles	7022	PR_622	Immediate							F
	Trial run acceleration	7025	PR_625	Immediate							F
	Velocity observer gain	7028	PR_628	Immediate							F

Class	Label	PNU	Panel display	Activation	Valid Mode						
	Velocity observer bandwidth	7029	PR_629	Immediate							F
	Frame error window time	7034	PR_634	Immediate							F
	Frame error window	7035	PR_635	Immediate							F
	Absolute value rotation mode denominator setting	7054	PR_654	After restart							F
	Rotor blocked torque limit threshold	7056	PR_656	Immediate							F
	Blocked rotor alarm delay time	7057	PR_657	Immediate							F
	Homing mode position threshold	7059	PR_659	Immediate							F
	Z-signal holding time	7061	PR_661	Immediate							F
	Absolute multiturn data upper limit	7063	PR_663	After restart							F
[Class A] PN Communication	Heartbeat alarm threshold	925/11000	Pr_A00	Immediate							F
	Operation mode	930/11001	Pr_A01	Immediate							F
	Homing	972/11014	Pr_A14	Immediate							F
	Restore to factory default	976/11015	Pr_A15	Immediate							F
	Save parameters	977/11016	Pr_A16	Immediate							F
	Sensor settings	979/11022	Pr_A22	Immediate							F
	Sensor type	979/11023	Pr_A23	Immediate							F
	Sensor resolution	979/11024	Pr_A24	Immediate							F
	Sensor slip factor 1	979/11025	Pr_A25	Immediate							F
	Sensor slip factor 2	979/11026	Pr_A26	Immediate							F
	Sensor multiturn turn count	979/11027	Pr_A27	Immediate							F
	User defined receive data value	11038	Pr_A38	Immediate							F
	User defined send data value	11039	Pr_A39	Immediate							F
	User defined receive data setting	11040	Pr_A40	Immediate							F
	User defined send data setting	11041	Pr_A41	Immediate							F
	Communication timeout setting	11042	Pr_A42	Immediate							F
	Synchronization cycle	11043	Pr_A43	Immediate							F
	IP address	61001/11046	Pr_A46	Immediate							F
	Subnet mask	61004/11047	Pr_A47	Immediate							F

Class	Label	PNU	Panel display	Activation	Valid Mode						
	Default gateway	61003/ 11048	Pr_A48	Immediate							F
	MAC address low bit	61002/ 11049	Pr_A49	Immediate							F
	MAC address mid bit	61002/ 11050	Pr_A50	Immediate							F
	MAC address high bit	61002/ 11051	Pr_A51	Immediate							F
	Telegram selection	922/11 062	Pr_A62	Immediate							F
	Auxiliary telegram selection	11063	Pr_A63	Immediate							F
[Class B] PN-EPOS	Synchronization offset baseline	1200 0	Pr_B00	Immediate							F
	Min synchronization cycle	1200 1	Pr_B01	Immediate							F
	Max synchronization cycle	1200 2	Pr_B02	Immediate							F
	Planner state machine	1200 4	Pr_B04	Immediate							F
	Internal motion state machine	1200 5	Pr_B05	Immediate							F
	Internal control data	1200 6	Pr_B06	Immediate							F
	Internal positioning data	1200 7	Pr_B07	Immediate							F
	Internal settings data	1200 8	Pr_B08	Immediate							F
	Homing Z-signal recorded position	1200 9	Pr_B09	Immediate							F
	Homing position	1201 0	Pr_B10	Immediate							F
	Homing trigger position	1201 1	Pr_B11	Immediate							F
	Homing simulated input	1201 2	Pr_B12	Immediate							F
	Homing settings	1201 3	Pr_B13	Immediate							F
	Max. homing distance	1201 4	Pr_B14	Immediate							F
	Planner command position	1201 5	Pr_B15	Immediate							F
	Planner command velocity	1201 6	Pr_B16	Immediate							F
	Planner command torque	1201 7	Pr_B17	Immediate							F
	Planner actual position	1201 8	Pr_B18	Immediate							F
	Planner actual velocity	1201 9	Pr_B19	Immediate							F
	Planner actual torque	1202 0	Pr_B20	Immediate							F
	EPOS max. velocity	1202	Pr_B24	Immediate							F

Class	Label	PNU	Panel display	Activation	Valid Mode						
		4									
	EPOS max. acceleration	12025	Pr_B25	Immediate							F
	EPOS max. deceleration	12026	Pr_B26	Immediate							F
	EPOS software negative position limit	12027	Pr_B27	Immediate							F
	EPOS software positive position limit	12028	Pr_B28	Immediate							F
	EPOS deviation threshold	12029	Pr_B29	Immediate							F
	EPOS deviation window time	12030	Pr_B30	Immediate							F
	EPOS position deviation	12031	Pr_B31	Immediate							F
	EPOS positioning window time	12032	Pr_B32	Immediate							F
	EPOS JOG1 velocity	12033	Pr_B33	Immediate							F
	EPOS JOG2 velocity	12034	Pr_B34	Immediate							F
	EPOS JOG1 distance	12035	Pr_B35	Immediate							F
	EPOS JOG2 distance	12036	Pr_B36	Immediate							F
	EPOS Homing mode	12037	Pr_B37	Immediate							F
	EPOS home position	12038	Pr_B38	Immediate							F
	EPOS home position deviation	12039	Pr_B39	Immediate							F
	EPOS homing high velocity	12040	Pr_B40	Immediate							F
	EPOS homing low velocity	12041	Pr_B41	Immediate							F
	EPOS homing acceleration/deceleration rate	12042	Pr_B42	Immediate							F
	MDI target position	12043	Pr_B43	Immediate							F
	MDI max. velocity	12044	Pr_B44	Immediate							F
	MDI ending velocity	12045	Pr_B45	Immediate							F
	MDI acceleration rate	12046	Pr_B46	Immediate							F
	MDI deceleration rate	12047	Pr_B47	Immediate							F
	Emergency stop deceleration rate	12048	Pr_B48	Immediate							F
	I/O function	12049	Pr_B49	Immediate							F

Class	Label	PNU	Panel display	Activation	Valid Mode						
	Function expansion	12050	Pr_B50	Immediate							F
	Ramp stoppage deceleration time	12058	PR_B58	Immediate							F
	Quick stop deceleration time	12059	PR_B59	Immediate							F

3.2 Parameter Function

3.2.1【Class 0】Basic Settings

Pr0.00	Label	Model-following bandwidth			Valid Mode							F
	Range	0~5000	Unit	0.1Hz	Default	1	PNU		1000			

Model-following bandwidth, also known as model-following control (MFC), is used to control the position loop to improve the responsiveness to commands, speed up positioning time and reduce following error. The effect is obvious especially in low and medium mechanical stiffness.

Value	Explanation
0	Disable the function.
1	Enable the function to set bandwidth automatically, recommended for most applications. Pr0.00=Pr1.01
2	Reserved
3-9	Invalid

Pr0.00>9: Model-following bandwidth value set by Pr0.00.
10<Pr0.00<5000: Specifies the bandwidth.
**Recommended settings for belt application: 30<Pr0.00<100.*

Pr0.01	Label	Control Mode Settings			Valid Mode							F
	Range	0~10	Unit	—	Default	10	PNU		1001			

Set value to use following control modes：

Value	Content	Details
0-9	Reserved	Reserved
10	PN mode	Default mode

Pr0.02	Label	Real time Auto Gain Adjusting			Valid Mode							F
	Range	0~1F	Unit	—	Default	2	PNU		1002			

Set up the mode of the real time auto gain adjusting.

Data bits	Category	Settings	Application
0x00_	Motion setting mode	Used to set motion setting mode, which can be selected according to the motion characteristics or setting requirements. Generally, it is recommended to select mode 1 with good generality when there is no special requirement, mode 2 when rapid positioning is needed If mode 1 and mode 2 cannot meet the requirements, please choose mode 0.	
		0:Manual	Pr0.03 invalid. Gain value must be adjusted manually and accordingly.
		1:Standard	Pr0.03 valid. Quick gain adjusting can be achieved by changing Pr0.03 stiffness value. Gain switching is not used in this mode, suitable for applications with requirements for stability.
		2:Positioning	Pr0.03 valid. Quick gain adjusting can be achieved by changing Pr0.03 stiffness value. This mode is suitable for applications requiring quick positioning. Not

			recommended for load mounted vertical to ground, or please compensate for the load using Pr6.07
0x0_0	Load type setting	Used to select the load type, choose according to load-inertia ratio and mechanical structure.	
		0: Rigid structure	This mode prioritizes system responsiveness. Use this mode when there is a relatively rigid structure with low load inertia. Typical application including directly connected high-precision gearbox, lead screw, gears, etc.
		1:High inertia	For applications with higher load inertia (10 times or above), gain settings take into account both machine stability and responsiveness. Not recommended to set stiffness above 15 for high load inertia.
		2: Flexible structure	This mode prioritizes system stability. Use this mode when there is low rigidity structure with high load inertia. Typical applications included belts and chains.
0x_00	reserved		

The setting type combination is a hexadecimal standard, as follows:

Setting type combination	Application type
0X000	Rigid structure + Manual
0X001	Rigid structure +Standard
0X002	Rigid structure +Positioning
0X010	High inertia + Manual
0X011	High inertia + Standard
0X012	High inertia + Positioning
0X020	Flexible structure + Manual
0X021	Flexible structure +Standard
0X022	Flexible structure +Positioning

Pr0.03	**Label**	Real time auto stiffness adjusting			**Mode**							**F**
	Range	50 ~ 81	Unit	—	**Default**	70	PNU	1003				

Valid when Pr0.02 = 1,2

Low ⟶ Mechanical stiffness ⟶ High

Low ⟶ Servo gain ⟶ High

81.80 ····· 70.69.68 ····· 51.50

Low ⟶ Responsiveness ⟶ High

Lower values ensure better system responsiveness and mechanical stiffness but machine vibration might occur, please set accordingly.

Pr0.04	Label	Inertia ratio			Mode							F
	Range	0~10000	Unit	%	Default	250	PNU	1004				

Pr0.04=(load inertia/motor rotational inertia)×100%

Set inertia ratio according to actual load inertia. When both are uniform, actual motor velocity loop responsiveness and gain settings will be consistent. If inertia ratio is greater than actual value, velocity loop gain settings will be higher and vice versa.
For motor with high inertia, Pr0.04 can be left unfilled but optimal setting of Pr0.04 could improve system performance.

Pr0.06	Label	Command polarity inversion			Mode							F
	Range	0 ~ 1	Unit	—	Default	0	PNU	1006				

Used to change the rotational direction of the motor.

Set value	Details
0	Polarity of the command is not inversed. The direction of rotation is consistent with the polarity of command.
1	Polarity of command is inversed. The direction of rotation is opposite to the polarity of command.

Pr0.08	Label	Command pulse counts per revolution			Mode							F
	Range	0~8388608	Unit	P-	Default	0	PNU	1008				
	Activation	After restart										
	To set command pulse counts per motor revolution.											

Pr0.11	Label	Encoder pulse output per revolution			Mode							F
	Range	0~65535	Unit	P/r	Default	2500	PNU	1011				
	Activation	After restart										
	Including rising and falling edge of phase A and B, so encoder actual differential output pulse count = Pr0.011 x 4 Please make sure: Motor rotational speed x Pr0.11 x 4≤1MHz. If exceeds, alarm Er280 might occur.											

Pr0.12	Label	Pulse output logic inversion			Mode							F
	Range	0~1	Unit	-	Default	0	PNU	1012				
	Activation	After restart										

To set phase B logic and output source from encoder pulse output. To inverse B-Phase pulse logic and change the relation between Phase A and Phase B

Pulse output logic inversion

Pr0.12	Phase B logic	CW direction	CCW direction
[0]	Not inverted	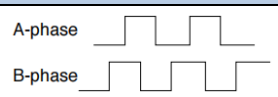	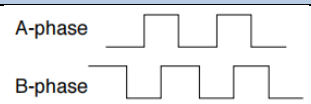
[1]	Inverted	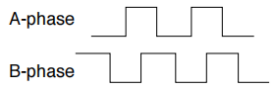	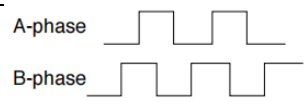

Pr0.13	Label	1st Torque Limit			Mode							F
	Range	0~500	Unit	%	Default	300	PNU	1013				
	Activation	Immediate										
	1st torque limit is set according to ratio percentage of motor rated current. Do not exceed max driver output current.											

Pr0.14	Label	Excessive Position Deviation Settings			Mode							F
	Range	0~500	Unit	0.1rev	Default	30	PNU	1014				
	Activation	Immediate										
	Please set threshold value for position deviation accordingly. Default factory setting = 30, Er180 will be triggered if positive deviation is in excess of 3 revolutions.											

Pr0.15	Label	Absolute Encoder settings	Mode							F

	Range	0~32767	**Unit**	-	**Default**	0	**PNU**	1015
	Activation	Immediate						

0: Incremental mode:
Used as an incremental encoder. Doesn't retain position data on power off. Unlimited travel distance.
1: Multiturn linear mode:
Used as a multiturn absolute encoder. Retrain position data on power off. For applications with fixed travel distance and no multiturn data overflow.
2: Multiturn rotary mode:
Used as a multiturn absolute encoder. Retrain position data on power off. Actual data feedback in between 0-(Pr6.63). Unlimited travel distance.
3: Single turn absolute mode:
Used when travel distance is within 1 revolution of the encoder. Data overflow will trigger alarm.
5: Clear multiturn alarm and activate multiturn absolute function. Will switch to multiturn mode once alarm cleared, if remains at 5 after 3s, please solve according to Er153.
9: Clear multiturn position, reset multiturn alarm and activate multiturn absolute function. Will switch to multiturn mode once alarm cleared, if remains at 9 after 3s, please solve according to Er153. Please disable axis before setting to 9 and home the axis before using.

Pr0.16	**Label**	Regenerative resistance			**Mode**							**F**
	Range	40~500	**Unit**	Ohm	**Default**	100	**PNU**	1016				
	Activation	Immediate										

To set resistance value of regenerative resistor

Pr0.17	**Label**	Regenerative resistor power rating			**Mode**							**F**
	Range	20~5000	**Unit**	W	**Default**	50	**PNU**	1017				
	Activation	Immediate										

To set power rating of regenerative resistor.

Pr0.16 and Pr0.17 determines the threshold value of Er 120. Please set accordingly or it might trigger false alarm or damage to servo driver.

Note: If external regenerative resistor is used, please set according to its labeled power rating.

Pr0.19	**Label**	Friction compensation setting			**Mode**							**F**
	Range	0~1000	**Unit**	-	**Default**	0	**PNU**	1019				
	Activation	Immediate										

Friction compensation setting = 0, default = 1;

Friction compensation setting = x, indicating x+1/10000 of friction compensation runway;

Pr0.25	**Label**	Synchronous compensation time 1			**Mode**							**F**
	Range	1~100	**Unit**	0.1us	**Default**	10	**PNU**	1025				
	Activation	After restart										

Synchronous dithering compensation range. Used for master device with poor synchronization.

Pr0.26	Label	Synchronous compensation time 2			Mode							F
	Range	1~2000	Unit	0.1us	Default	50	PNU		1026			
	Activation	After restart										
Synchronous dithering compensation range. Used for master device with poor synchronization.												

3.2.2【Class 1】Gain Adjustments

Pr1.00	Label	1st position loop gain			Mode							F
	Range	0~30000	Unit	0.1/s	Default	320	PNU		2000			
	Activation	Immediate										
Higher position loop gain value improves the responsiveness of the servo driver and lessens the positioning time. Position loop gain value shouldn't exceed responsiveness of the mechanical system and take in consideration velocity loop gain, if not it might cause vibration, mechanical noise and overtravel. As velocity loop gain is based on position loop gain, please set both values accordingly. Recommended range: 1.2≤Pr1.00/Pr1.01≤1.8												

Pr1.01	Label	1st velocity loop gain			Mode							F
	Range	1~32767	Unit	0.1Hz	Default	180	PNU		2001			
	Activation	Immediate										
To determine the responsiveness of the velocity loop. If inertia ratio of Pr0.04 is uniform with actual inertia ratio, velocity loop responsiveness = Pr1.01. To increase position loop gain and improve responsiveness of the whole system, velocity loop gain must be set at higher value. Please notice that if the velocity loop gain is too high, it might cause vibration.												

Pr1.02	Label	1st Integral Time Constant of Velocity Loop			Mode							F
	Range	1~10000	Unit	0.1ms	Default	310	PNU		2002			
	Activation	Immediate										
If auto gain adjusting function is not enabled, Pr1.02 is activated. The lower the set value, the closer the lag error at stop to 0 but might cause vibration. If the value set is overly large, overshoot, delay of positioning time duration and lowered responsiveness might occur. Set 10000 to deactivate Pr1.02. Recommended range: 50000≤PA1.01xPA1.02≤150000 For example: Velocity loop gain Pr1.01=500(0.1Hz), which is 50Hz. Integral time constant of velocity loop should be 100(0.1ms)≤Pr1.02≤300(0.1ms)												

Pr1.03	Label	1st velocity detection filter			Mode							F
	Range	0~10000	Unit	—	Default	15	PNU	2003				
	Activation	Immediate										

This filter is a low pass filter. It blocks high frequencies which cause system instability from velocity feedback data. The higher the set value, lower frequencies will be blocked and velocity responsiveness will also be lowered. Pr1.03 needs to match velocity loop gain. Please refer to the following table.

Value	Velocity Detection Filter Cut-off Frequency(Hz)	Value	Velocity Detection Filter Cut-off Frequency(Hz)
0	2500	16	750
1	2250	17	700
2	2100	18	650
3	2000	19	600
4	1800	20	550
5	1600	21	500
6	1500	22	450
7	1400	23	400
8	1300	24	350
9	1200	25	300
10	1100	26	250
11	1000	27	200
12	950	28	175
13	900	29	150
14	850	30	125
【15】	800	31	100

Pr1.04	Label	1st Torque Filter Time Constant			Mode							F
	Range	0~2500	Unit	0.01ms	Default	126	PNU	2004				
	Activation	Immediate										

To set torque command low-pass filter, add a filter delay time constant to torque command and filter out the high frequencies in the command.
Often used to reduce or eliminate some noise or vibration during motor operation, but it will reduce the responsiveness of current loop, resulting in undermining velocity loop and position loop control. Pr1.04 needs to match velocity loop gain.
Recommended range: 1,000,000/(2π×Pr1.04) ≥Pr1.01×4

For example: Velocity loop gain Pr1.01=180(0.1Hz) which is 18Hz. Time constant of torque filter should be Pr1.01≤221(0.01ms)
If mechanical vibration is due to servo driver, adjusting Pr1.04 might eliminate the vibration. The smaller the value, the better the responsiveness but also subjected to machine conditions. If the value is too large, it might lower the responsiveness of current loop.
With higher Pr1.01 value settings and no resonance, reduce Pr1.04 value;
With lower Pr1.01 value settings, increase Pr1.04 value to lower motor noise.

Pr1.05	**Label**	2nd Position Loop Gain			**Mode**							**F**
	Range	0~30000	**Unit**	0.1/s	**Default**	380		**PNU**		2005		
	Activation	Immediate										

Pr1.06	**Label**	2nd velocity loop gain			**Mode**							**F**
	Range	1~32767	**Unit**	0.1Hz	**Default**	180		**PNU**		2006		
	Activation	Immediate										

Pr1.07	**Label**	2nd Integral Time Constant of Velocity Loop			**Mode**							**F**
	Range	1~10000	**Unit**	0.1ms	**Default**	10000		**PNU**		2007		
	Activation	Immediate										

Pr1.08	**Label**	2nd velocity detection filter			**Mode**							**F**
	Range	0~31	**Unit**	—	**Default**	15		**PNU**		2008		
	Activation	Immediate										

Pr1.09	**Label**	2nd Torque Filter Time Constant			**Mode**							**F**
	Range	0~2500	**Unit**	0.01ms	**Default**	126		**PNU**		2009		
	Activation	Immediate										
	Position loop, velocity loop, velocity detection filter, torque command filter each have 2 pairs of gain or time constant (1st and 2nd).											

Pr1.10	Label	Velocity feed forward gain			Mode							F
	Range	0~1000	Unit	0.10%	Default	300	PNU		2010			
	Activation	Immediate										

Velocity control command according to internal position command processing or through PN communication multiplied by Pr1.10 and add on to velocity command after position command processing

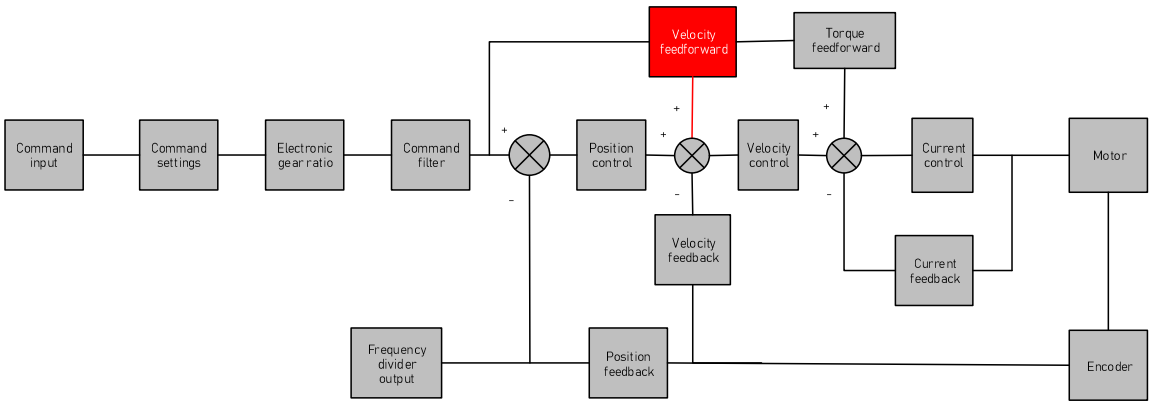

Used for decreasing following error caused by low responsiveness of velocity loop. Might cause overshoot or increase in noise if set value is too high.

Pr1.11	Label	Velocity feed forward filter time constant			Mode							F
	Range	0~6400	Unit	0.01ms	Default	50	PNU		2011			
	Activation	Immediate										

Set velocity feed forward low pass filter to eliminate high or abnormal frequencies in velocity feed forward command. Often used when position command with low resolution or high electronic gear ration to smoothen velocity feed forward.
Position deviation under constant velocity can be lowered with higher velocity feed forward gain. Please to refer to the equation below.

Position deviation[Uint]= $\frac{Set\ velocity[\frac{Uint}{s}]}{Position\ loop\ gain[Hz]}\ x\ \frac{100 - Velocity\ feed\ foward\ gain[\%]}{100}$

Pr1.12	**Label**	Torque feed forward gain			**Mode**							F
	Range	0~1000	**Unit**	0.1%	**Default**	0	**PNU**	2012				
	Activation	Immediate										
	Before using torque feed forward, please set correct inertia ratio Pr0.04. By increasing torque feed forward gain, position deviation on constant acceleration/deceleration can be reduced to close to 0. Under ideal condition and trapezoidal speed profile, position deviation of the whole motion can be reduced to close to 0. In reality, perturbation torque will always exist, hence position deviation can never be 0.											

Pr1.13	**Label**	Torque feed forward filter time constant			**Mode**							F
	Range	0~6400	**Unit**	0.01ms	**Default**	0	**PNU**	2013				
	Activation	Immediate										
	Low pass filter to eliminate abnormal or high frequencies in torque feed forward command. Usually used when encoder has lower resolution or precision. Noise reduces if torque feed forward filter time constant is set higher but position deviation will increase at acceleration varied points.											

Pr1.15	Label	Position control gain switching mode			Mode							F
	Range	0~11	Unit	—	Default	0	PNU	2015				
	Activation	Immediate										

Set Value	Condition	Gain switching condition
0	1st gain fixed	Fixed on using 1st gain(Pr1.00-Pr1.04)
1	2nd gain fixed	Fixed on using 2nd gain (Pr1.05-Pr1.09)
2	Reserved	
3	High set torque	Switch to 2nd gain when set torque command absolute value larger than (level + hysteresis)[%] Switch to 1st gain when set torque command absolute value smaller than (level + hysteresis)[%] 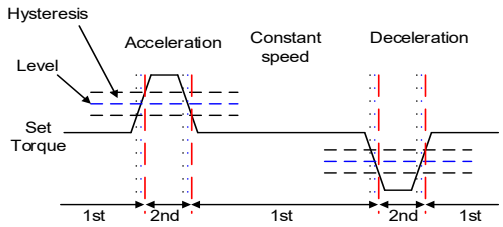
4	Reserved	Reserved
5	High set velocity	Valid for 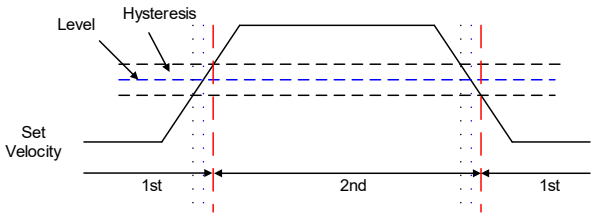 position and velocity control. Switch to 2nd gain when set velocity command absolute value larger than (level + hysteresis)[r/min] Switch to 1st gain when set velocity command absolute value smaller than (level-hysteresis)[r/min]

6	Large position deviation	Valid for position control. Switch to 2nd gain when position deviation absolute value larger than (level + hysteresis)[pulse] Switch to 1st gain when position deviation absolute value smaller than (level-hysteresis)[pulse] 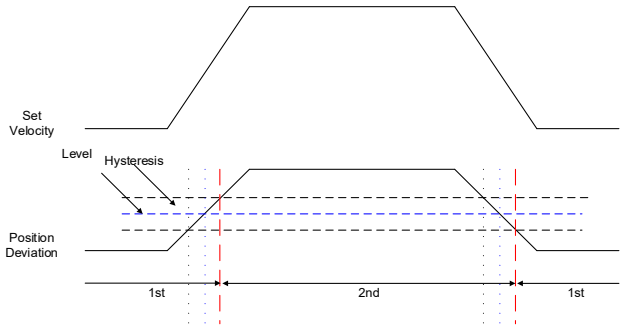
7	Pending position command	Valid for position control. Switch to 2nd gain if position command ≠ 0 Switch to 1st gain if position command remains = 0 throughout the duration of delay time. 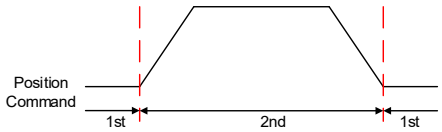
8	Not yet in position	Valid for position control. Switch to 2nd gain if position command is not completed. Switch to 1st gain if position command remains uncompleted throughout the duration of delay time. 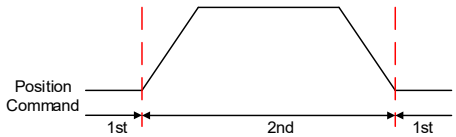
9	High actual velocity	Valid for position control. Switch to 2nd gain when actual velocity absolute value larger than (level + hysteresis)[r/min] Switch to 1st gain when actual velocity absolute value remains smaller throughout the duration of delay time than (level-hysteresis)[r/min]

		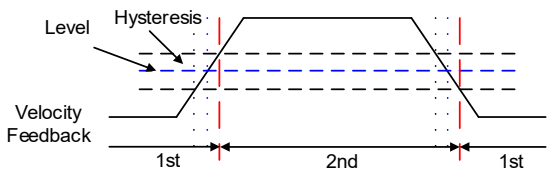
10	Pending position command +actual velocity	Valid for position control. Switch to 2nd gain if position command ≠ 0 Switch to 1st gain if positional command = 0 throughout the duration of delay time and absolute value of actual velocity remains smaller than (level - hysteresis) (r/min) 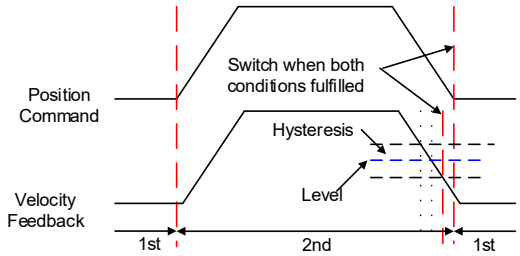

For position control mode, set Pr1.15=3,5,6,9,10;

For velocity control mode, set Pr1.15=3,5,9;

*** Above 'level' and 'hysteresis' are in correspondence to Pr1.17 Position control gain switching level and Pr1.18 Hysteresis at position control switching.*

Pr1.17	**Label**	Position control gain switching level			**Mode**							**F**
	Range	0~20000	**Unit**	Mode dependent	**Default**	50	**PNU**		2017			
	Activation	Immediate										

Set threshold value for gain switching to occur.
Unit is mode dependent.

Switching condition	**Unit**
Position	Encoder pulse count
Velocity	RPM
Torque	%

Please set level ≥ hysteresis

Pr1.18	Label	Hysteresis at position control switching			Mode							F
	Range	0~20000	Unit	Mode dependent	Default	33	PNU	2118h				
	Activation	Immediate										

To eliminate instability of gain switching. Used in combination with Pr1.17 using the same unit.
If level< hysteresis, drive will set internally hysteresis = level.

Pr1.19	Label	Position gain switching time			Mode							F
	Range	0~10000	Unit	0.1ms	Default	33	PNU	2019				
	Activation	Immediate										

During position control, if 1st and 2nd gain difference is too large, to ease torque changes and vibration due to rapid changes in position loop gain, set suitable Pr1.19 value
For example: 1st (pr1.00) <-> 2nd (Pr1.05)

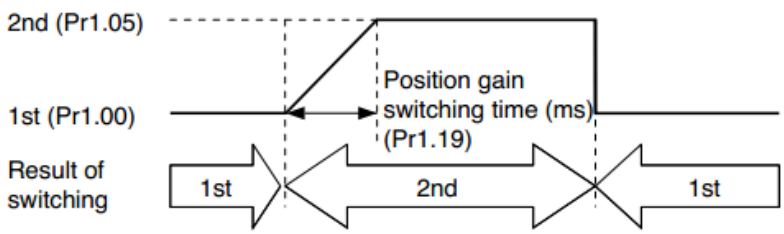

Pr1.37	Label	Unique Registry			Mode							F
	Range	0~0xFFFF	Unit	-	Default	0	PNU	2037				
	Activation	Immediate										

Bit	Pr1.37	Description	Bit	Pr1.37	Description
0	0x0001	Deactivate stall alarm 1A1	8	0x0100	Deactivate regenerative energy release error alarm 121
1	0x0002	Deactivate overspeed alarm 1A0	9	0x0200	Deactivate phase loss on motor power cable alarm 0A3
2	0x0004	Deactivate excessive deviation alarm 180	10	0x0400	Reserved
3	0x0008	Deactivate multiturn overflow alarm 157	11	0x0800	Deactivate software overcurrent alarm 0E0
4	0x0010	Deactivate overload alarm 100	12	0x1000	Deactivate encoder disconnection alarm 150
5	0x0020	Deactivate encoder parameter loading error at initialization alarm	13	0x2000	Deactivate encoder data error alarm 151
6	0x0040	Deactivate strong vibration alarm 190	14	0x4000	Deactivate encoder communication error alarm 170
7	0x0080	Deactivate regenerative energy overflow alarm 120	15	0x8000	Activate torque saturated alarm 105

Pr1.38	Label	Unique Registry 1			Mode							F
	Range	0~0xFFFF	Unit	-	Default	0		PNU		2038		
	Activation	Immediate										

3.2.3【Class 2】Vibration Suppression

Pr2.00	Label	Adaptive filtering mode settings			Mode							F
	Range	0~4	Unit	-	Default	0		PNU		3000		
	Activation	Immediate										

Set value	Explanation	
0	Adaptive filter: invalid	Parameters related to 3rd and 4th notch filter remain unchanged
1	Adaptive filter: 1 filter valid for once.	1 adaptive filter becomes valid. 3rd notch filter related parameters updated accordingly. Pr2.00 switches automatically to 0 once updated.
2	Adaptive filter: 1 filter remains valid	1 adaptive filter becomes valid. 3rd notch filter related parameters will keep updating accordingly.
3-4	Reserved	-

Pr2.01	Label	1st notch frequency			Mode							F
	Range	50~4000	Unit	Hz	Default	4000		PNU		3001		
	Activation	Immediate										

Set center frequency of 1st torque command notch filter.
Set Pr2.01 to 4000 to deactivate notch filter

Pr2.02	Label	1st notch bandwidth selection			Mode							F
	Range	0~20	Unit	-	Default	4		PNU		3002		
	Activation	Immediate										

Set notch bandwidth for 1st resonant notch filter.
Under normal circumstances, please use factory default settings. If resonance is under control, in combination with Pr2.01 and Pr2.03, Pr2.02 can be reduced to improve current loop responsiveness which allows higher mechanical stiffness settings.

Pr2.03	Label	1st notch depth selection			Mode							F
	Range	0~99	Unit	-	Default	0	PNU		3003			
	Activation	Immediate										
	Set notch depth for 1st resonant notch filter. Under normal circumstances, please use factory default settings. If resonance is under control, in combination with Pr2.01 and Pr2.02, Pr2.03 can be reduced to improve current loop responsiveness which allows higher mechanical stiffness settings.											

Pr2.04	Label	2nd notch frequency			Mode							F
	Range	50~4000	Unit	Hz	Default	4000	PNU		3004			
	Activation	Immediate										
	Set center frequency of 2nd torque command notch filter. Set Pr2.04 to 4000 to deactivate notch filter											

Pr2.05	Label	2nd notch bandwidth selection			Mode							F
	Range	0~20	Unit	-	Default	4	PNU		3005			
	Activation	Immediate										
	Set notch bandwidth for 2nd resonant notch filter. Under normal circumstances, please use factory default settings. If resonance is under control, in combination with Pr2.04 and Pr2.06, Pr2.05 can be reduced to improve current loop responsiveness which allows higher mechanical stiffness settings.											

Pr2.06	Label	2nd notch depth selection			Mode							F
	Range	0~99	Unit	-	Default	0	PNU		3006			
	Activation	Immediate										
	Set notch depth for 1st resonant notch filter. When Pr2.06 value is higher, notch depth becomes shallow, phase lag reduces. Under normal circumstances, please use factory default settings. If resonance is under control, in combination with Pr2.04 and Pr2.05, Pr2.06 can be reduced to improve current loop responsiveness which allows higher mechanical stiffness settings.											

Pr2.07	Label	3rd notch frequency			Mode							F
	Range	50~4000	Unit	Hz	Default	4000	PNU		3007			
	Activation	Immediate										
	Set center frequency of 3rd torque command notch filter. Set Pr2.07 to 4000 to deactivate notch filter											

Pr2.08	Label	3rd notch bandwidth selection			Mode							F
	Range	0~20	Unit	-	Default	4	PNU	3008				
	Activation	Immediate										

Set notch bandwidth for 3rd resonant notch filter.
Under normal circumstances, please use factory default settings.

Pr2.09	Label	3rd notch depth selection			Mode							F
	Range	0~99	Unit	-	Default	0	PNU	3009				
	Activation	Immediate										

Set notch depth for 3rd resonant notch filter.
When Pr2.09 value is higher, notch depth becomes shallow, phase lag reduces.

Pr2.14	Label	1st damping frequency			Mode							F
	Range	0~2000	Unit	0.1Hz	Default	0	PNU	3014				
	Activation	Immediate										

0: Deactivate

To suppress wobble at load end. Often used when wobble of flexible structure due to high deceleration upon stopping. Especially effective for wobble with frequencies under 100Hz. Set Pr2.15 to wobble frequency (wobble frequency can be determined using tracing function of Motion Studio)

Pr2.16	Label	2nd damping frequency			Mode							F
	Range	0~2000	Unit	0.1Hz	Default	0	PNU	3016				
	Activation	Immediate										

0: Deactivate

To suppress wobble at load end. Often used when wobble of flexible structure due to high deceleration upon stopping. Especially effective for wobble with frequencies under 100Hz. Set Pr2.16 to wobble frequency (wobble frequency can be determined using tracing function of Motion Studio)

Pr2.22	Label	Position command smoothing filter			Mode							F
	Range	0~32767	Unit	0.1ms	Default	0	PNU		3022			
	Activation	Stop axis										

To set time constant of 1 time delay filter of position command.
To set time constant of 1 time delay filter, according to target velocity Vc square wave command as show below.

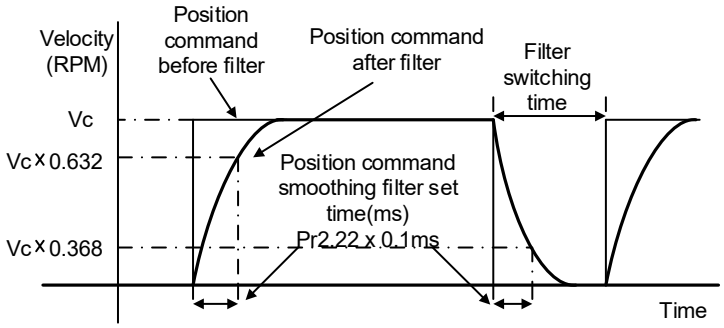

Usually applied when there is rather sharp acceleration which might cause motor overshoot or undershoot. To smoothen command signal, reduces impact to machines and eliminate vibration. If Pr2.22 is set too high, overall time will be lengthened.

Pr2.23	Label	Position command FIR filter			Mode							F
	Range	0~10000	Unit	0.1ms	Default	0	PNU		3023			
	Activation	Disable axis										

As shown below, when target velocity Vc square wave command reaches Vc, it becomes trapezoidal wave after filtering.

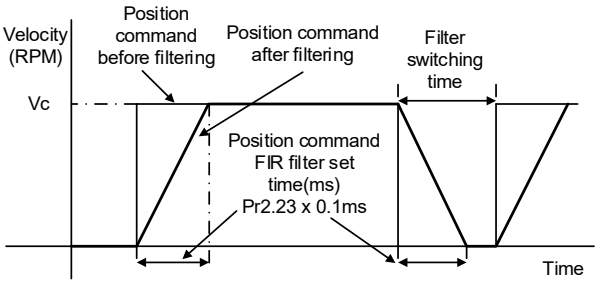

As shown below, when target velocity Vc trapezoidal command reaches Vc, it becomes S wave after filtering.

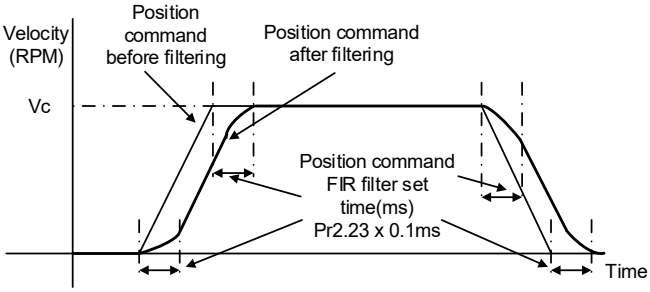

Usually applied when there is rather sharp acceleration which might cause motor overshoot or

undershoot. To smoothen command signal, reduces impact to machines and eliminate vibration. If Pr2.23 is set too high, overall time will be lengthened.

***Please wait for command to stop and after filter idle time to modify Pr2.23.*
Filter switching time = (Pr2.23 set value x 0.1ms + 0.25ms)

Pr2.31	**Label**	5th resonant frequency			**Mode**								**F**
	Range	50~4000	**Unit**	Hz	**Default**	4000	**PNU**		2031				
	Activation	Immediate											
	To set zero-valued eigenfrequency of 5th resonant notch filter. Pr2.31 corresponds to machine specific resonant frequency. Notch filter deactivated if Pr2.31 is set to any value.												

Pr2.32	**Label**	5th resonant Q value			**Mode**								**F**
	Range	0~1000 0	**Unit**	Hz	**Default**	0	**PNU**		2032				
	Activation	Immediate											
	To set notch Q value of 5th resonant notch filter												

Pr2.33	**Label**	5th anti-resonant frequency			**Mode**								**F**
	Range	50~40000	**Unit**	Hz	**Default**	4000	**PNU**		2033				
	Activation	Immediate											
	To set zero-valued eigenfrequency of 5th resonant notch filter. Pr2.31 corresponds to machine-specific anti-resonant frequency.												

Pr2.34	**Label**	5th anti-resonant Q value			**Mode**								**F**
	Range	0~9900	**Unit**	Hz	**Default**	0	**PNU**		2034				
	Activation	Immediate											
	To set resonant Q value of 5th resonant notch filter												

Pr2.35	Label	6th resonant frequency			Mode							F
	Range	50~4000	Unit	Hz	Default	4000	PNU		2035			
	Activation	Immediate										
	To set zero-valued eigenfrequency of 6th resonant notch filter. Pr2.35 corresponds to machine-specific resonant frequency. Notch filter deactivated if Pr2.31 is set to any value.											

Pr2.36	Label	6th resonant Q value			Mode							F
	Range	0~1000 0	Unit	Hz	Default	0	PNU		2036			
	Activation	Immediate										
	To set notch Q value of 6th resonant notch filter											

Pr2.37	Label	6th anti-resonant frequency			Mode							F
	Range	50~40000	Unit	Hz	Default	4000	PNU		2037			
	Activation	Immediate										
	To set zero-valued eigenfrequency of 6th resonant notch filter. Pr2.37 corresponds to machine-specific anti-resonant frequency.											

Pr2.38	Label	6th anti-resonant Q value			Mode							F
	Range	0~9900	Unit	Hz	Default	0	PNU		2038			
	Activation	Immediate										
	To set resonant Q value of 6th resonant notch filter											

5.2.4【Class 3】Velocity Control

Pr3.12	**Label**	Acceleration time settings			**Mode**								**F**
	Range	0~10000	**Unit**	ms/ (1000RPM)	**Default**	0	**PNU**		4012				
	Activation	Immediate											
Pr3.13	**Label**	Deceleration time settings			**Mode**								**F**
	Range	0~10000	**Unit**	ms/ (1000RPM)	**Default**	0	**PNU**		4013				
	Activation	Immediate											

Set max acceleration/deceleration for velocity command.

If target velocity = *x* [rpm], max acceleration = *a* [unit: rpm/ms], acceleration time = *t* [ms]
Pr3.12 = *1000/a*
Pr3.13 = *1000/a*
a = x/t

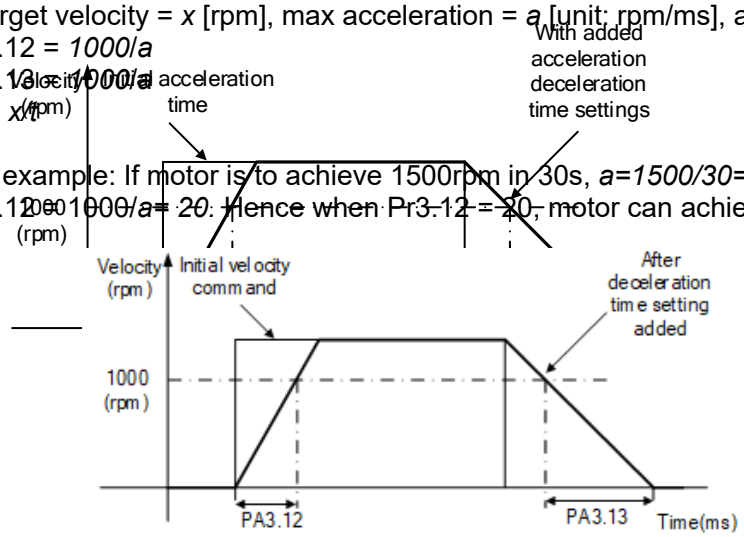

For example: If motor is to achieve 1500rpm in 30s, *a=1500/30=50rpm/ms*
Pr3.12 = *1000/a= 20*. Hence when Pr3.12 = 20, motor can achieve 1500rpm in 30s.

Usually used when there is rapid acceleration or trapezoidal wave velocity command due to many different internal speed segments under velocity control mode which causes instable while motor in motion.

Under AC1 velocity mode, please only use the parameter after freezing ramp function generator.

Pr3.14	**Label**	Sigmoid acceleration/deceleration settings			**Mode**								**F**
	Range	0~1000	**Unit**	ms	**Default**	0	**PNU**		4014				
	Activation	Axis disable											

To set sigmoid acceleration and deceleration turning point in accordance to Pr3.12 and Pr3.13.

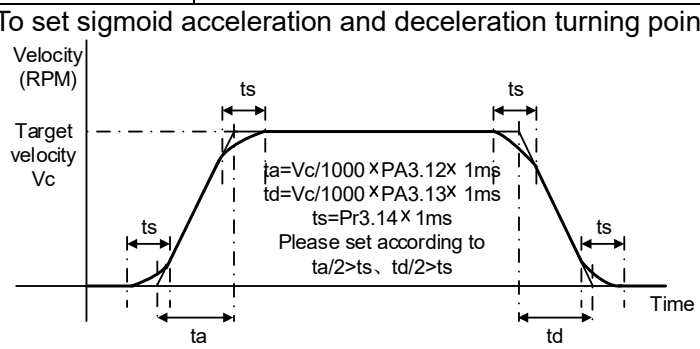

Pr3.16	Label	Zero speed clamp level			Mode								F
	Range	10~2000	Unit	RPM	Default	30		PNU			4016		
	Activation	Immediate											
	Velocity command is forced to 0 when actual velocity is lower than Pr3.16 and after static time set in Pr3.23												

Pr3.23	Label	Zero speed clamp static time			Mode								F
	Range	0~32767	Unit	ms	Default	0		PNU			4023		
	Activation	Immediate											
	To set delay time for zero speed clamp. To prevent creeping at low speed, velocity command forced to 0 when velocity goes under Pr3.16 after time set in Pr3.23												

Pr3.24	Label	Motor max rotational speed			Mode								F
	Range	0~10000	Unit	rpm	Default	0		PNU			4024		
	Activation	Immediate											
	Set max rotational speed for motor. Default = 0, max rated rotational speed.												

5.2.5【Class 4】I/O Interface Setting

Pr4.00	Label	Input selection DI1			Mode								F
	Range	0x0~0xFF	Unit	—	Default	0x0		PNU			5000		
	Activation	Immediate											
Pr4.01	Label	Input selection DI2			Mode								F
	Range	0x0~0xFF	Unit	—	Default	0x1		PNU			5001		
	Activation	Immediate											
Pr4.02	Label	Input selection DI3			Mode								F
	Range	0x0~0xFF	Unit	—	Default	0x2		PNU			5002		
	Activation	Immediate											
Pr4.03	Label	Input selection DI4			Mode								F
	Range	0x0~0xFF	Unit	—	Default	0x16		PNU			5003		
	Activation	Immediate											
Pr4.04	Label	Input selection DI5			Mode								F
	Range	0x0~0xFF	Unit	—	Default	0x0		PNU			5004		
	Activation	Immediate											
Pr4.05	Label	Input selection DI6			Mode								F
	Range	0x0~0xFF	Unit	—	Default	0x0		PNU			5005		

	Activation	Immediate

Digital input DI allocation using hexadecimal system

Input	Symbol	Set value	
		Normally open	Normally close
Invalid	—	0h	-
Positive limit switch	POT	1h	81h
Negative limit switch	NOT	2h	82h
Clear alarm	A-CLR	4h	-
Forced alarm	E-STOP	14h	94h
Home switch	HOME-SWITCH	16h	96h

- Please don't set anything other than listed in table above.
- Normally open: Valid when input = ON Normally close: Valid when input = OFF
- Er210 might occur if same function is allocated to different channels at the same time
- Channel that has no value doesn't affect driver motion.
- Front panel is of hexadecimal system.
- Pr4.00 – Pr4.05 corresponds to DI1 – DI6.

Pr4.10	**Label**	Output selection DO1			**Mode**					**F**
	Range	0x0~0xFF	**Unit**	—	**Default**	0x1	**PNU**		5010	
	Activation	Immediate								
Pr4.11	**Label**	Output selection DO2			**Mode**					**F**
	Range	0x0~0xFF	**Unit**	—	**Default**	0x3	**PNU**		5011	
	Activation	Immediate								
Pr4.12	**Label**	Output selection DO3			**Mode**					**F**
	Range	0x0~0xFF	**Unit**	—	**Default**	0x4	**PNU**		5012	
	Activation	Immediate								

Digital output DO allocation using hexadecimal system.

Output	Symbol	Set value	
		Normally open	Normally close
Master device control	—	00h	-
Alarm	ALM	01h	81h
Servo-Ready	S-RDY	02h	82h
External brake released	BRK-OFF	03h	83h
Positioning completed	INP	04h	84h
At-speed	AT-SPEED	05h	85h
Torque limit signal	TLC	06h	86h
Zero speed clamp detection	ZSP	07h	87h
Velocity coincidence	V-COIN	08h	88h
Position command ON/OFF	P-CMD	0Bh	8Bh
Velocity limit signal	V-LIMIT	0Dh	8Dh
Velocity command ON/OFF	V-CMD	0Fh	8Fh
Servo status	SRV-ST	12h	92h
Homing done	HOME-OK	22h	A2h

Please don't set any other than the outputs listed in the table above.

- Normally open：Active low
- Normally close：Active high
- Front panel is of hexadecimal system.
- Pr4.10 – Pr4.12 corresponds to DO1 – DO3.

Pr4.22	**Label**	Analog input 1 zero drift			**Mode**							**F**
	Range	-1860~1860	**Unit**	0.3mv	**Default**	0	**PNU**		5022			
	Activation	Immediate										
	To set zero drift compensation value for zero drift correction.											
Pr4.23	**Label**	Analog input 1 filter			**Mode**							**F**
	Range	0~6400	**Unit**	0.01ms	**Default**	0	**PNU**		5023			
	Activation	Immediate										
	To set a delay filter time coefficient for AI1 input voltage. When filter time takes effect, input voltage will be smoothen.											
Pr4.24	**Label**	Analog input 1 overvoltage			**Mode**							**F**
	Range	0~100	**Unit**	0.1V	**Default**	0	**PNU**		5024			
	Activation	Immediate										
	When Pr4.23 = 0, Pr4.23 invalid. Er270 might occur when the input voltage of AI1 is higher than the voltage after zero drift correction.											
Pr4.28	**Label**	Analog input 3 zero drift			**Mode**							**F**
	Range	-1860~1860	**Unit**	-	**Default**	0	**PNU**		5028			
	Activation	Immediate										
	To set zero drift compensation value for zero drift correction.											
Pr4.29	**Label**	Analog input 3 filter			**Mode**							**F**
	Range	0~6400	**Unit**	-	**Default**	0	**PNU**		5029			
	Activation	Immediate										
	To set a delay filter time coefficient for AI3 input voltage. When filter time takes effect, input voltage will be smoothen.											
Pr4.30	**Label**	Analog filter 3 overvoltage			**Mode**							**F**
	Range	0~100	**Unit**	-	**Default**	0	**PNU**		5030			
	Activation	Immediate										
	When Pr4.29 = 0, Pr4.29 invalid. Er270 might occur when the input voltage of AI3 is higher than the voltage after zero drift correction.											

Pr4.31	Label	Positioning complete range			Mode							F
	Range	0~10000	Unit	Command unit	Default	20	PNU	5031				
	Activation	Immediate										

To set position deviation range of INP1 positioning completed output signal.

Pr4.32	Label	Positioning complete output setting			Mode							F
	Range	0~4	Unit	-	Default	1	PNU	5032				
	Activation	Immediate										

Output conditions of INP1 positioning completed output signal

Set value	Positioning completed signal
0	Signal valid when the position deviation is smaller than Pr4.31
1	Signal valid when there is no position command and position deviation is smaller than Pr4.31
2	Signal valid when there is no position command, zero-speed clamp detection (ZSP) signal is ON and the positional deviation is smaller than Pr4.31
3	Signal valid when there is no position command and position deviation is smaller than Pr4.31. Signal ON when within the time set in Pr4.33 otherwise OFF.
4	When there is no command, position detection starts after the delay time set in Pr4.33. Signal valid when there is no position command and positional deviation is smaller than Pr4.31.

Pr4.33	Label	INP positioning delay time			Mode							F
	Range	0~15000	Unit	1ms	Default	0	PNU	5033				
	Activation	Immediate										

To set delay time when Pr 4.32 = 3

Set value	Positioning completed signal
0	Indefinite delay time, signal ON until next position command
1-15000	OFF within the time set; ON after time set. Switch OFF after receiving next position command.

Pr4.34	Label	Zero speed			Mode							F
	Range	1~2000	Unit	RPM	Default	50	PNU	5034				
	Activation	Immediate										

To set threshold value for zero speed clamp detection.
Zero speed clamp detection (ZSP) output signal valid when motor speed goes under the value set in Pr4.34

- Disregard the direction of rotation, valid for both directions.
- Hysteresis of 10RPM. Please refer to diagram on the right side.

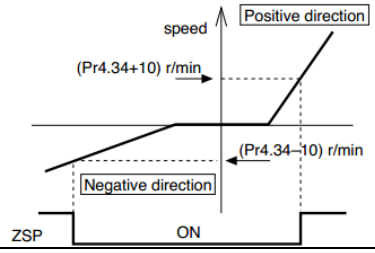

Pr4.35	Label	Velocity coincidence range			Mode							F
	Range	10~2000	Unit	RPM	Default	50	PNU	5035				
	Activation	Immediate										

If the difference between velocity command and motor actual speed is below Pr4.35, Velocity coincidence (V-COIN) output signal valid.

Due to 10RPM hysteresis:
Velocity coincidence output OFF -> ON timing (Pr4.35 -10) r/min
Velocity coincidence output ON -> OFF timing (Pr4.35 +10) r/min

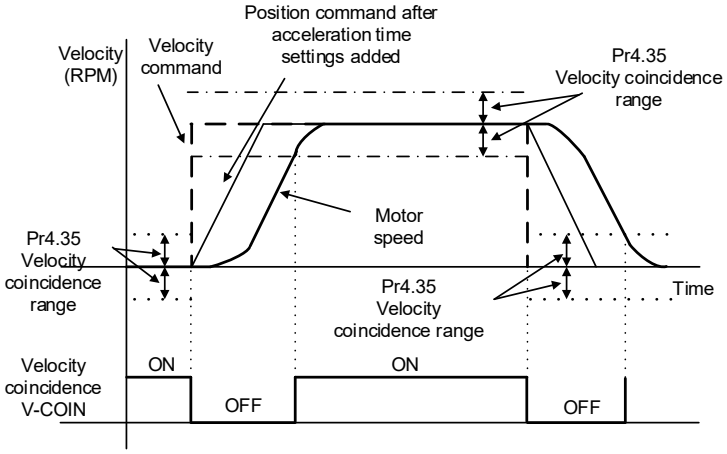

Pr4.36	Label	Velocity reached			Mode							F
	Range	10~2000	Unit	RPM	Default	1000	PNU				2436h	
	Activation	Immediate										

When motor velocity > Pr4.36, AT-speed output signal is valid.
Detection using 10RPM hysteresis.

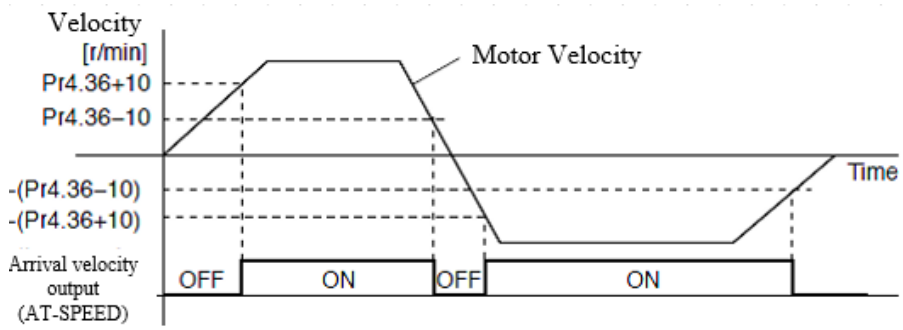

Pr4.37	Label	Motor power-off delay time			Mode							F
	Range	0~3000	Unit	1ms	Default	100	PNU				5037	
	Activation	Immediate										

To set delay time for holding brake to be activated after motor power off to prevent axis from sliding.

Pr4.38	Label	Delay time for holding brake release			Mode							F
	Range	0~3000	Unit	1ms	Default	0	PNU				5038	
	Activation	Immediate										

To set delay time for holding brake to be released after motor power on. Motor will remain at current position and input command is masked to allow holding brake to be fully released before motor is set in motion.

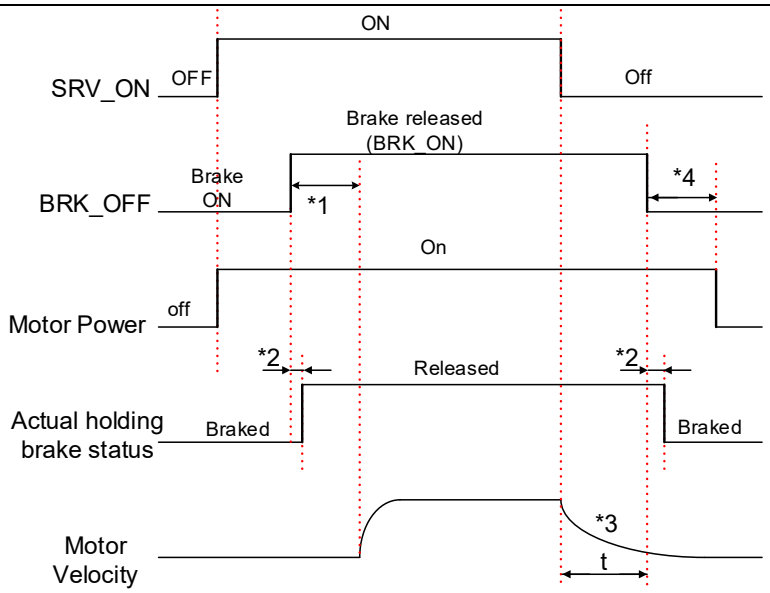

*1: Delay time set in Pr4.38
*2: Delay time from the moment BRK_OFF signal is given until actual holding brake is released or BRK_ON signal is given until actual holding brake is activated. It is dependent on the holding brake of the motor.
*3: Deceleration time is determined by Pr6.14 or if motor speed goes below Pr4.39, whichever comes first. BRK_OFF given after deceleration time.
*4: Pr4.37 set time value.

Delay time from the moment SRV_ON is given until BRK_OFF switch to BRK_ON, is less than 500ms.

Pr4.39	Label	Holding brake activation speed			Mode							F
	Range	30~3000	Unit	RPM	Default	30	PNU		5039			
	Activation	Immediate										

To set the activation speed for which holding brake will be activated.

When SRV-OFF signal is given, motor decelerates, after it reaches below Pr4.39 and Pr6.14 is not yet reached, BRK_OFF is given.
BRK_OFF signal is determined by Pr6.14 or if motor speed goes below Pr4.39, whichever comes first.

Application:
1. After disabling axis, Pr6.14 has been reached but motor speed is still above Pr4.39, BRK_OFF signal given.
2. After disabling axis, Pr6.14 has not been reached but motor speed is below Pr4.39, BRK_OFF signal given.

Pr4.43	Label	Emergency stop function			Mode							F
	Range	0~1	Unit	-	Default	0	PNU	5043				
	Activation	Immediate										
	0：Emergency stop is valid, servo driver will be forced to STOP and alarm occurs. 1：Emergency stop is invalid, servo driver will not be forced to STOP.											

Pr4.51	Label	Holding brake duty cycle			Mode							F
	Range	20~40	Unit	%	Default	30	PNU	5051				
	Activation	Immediate										

3.2.6【Class 5】Extension settings

Pr5.04	Label	Driver prohibition input settings			Mode							F
	Range	0~2	Unit	—	Default	0	PNU	6004				
	Activation	Immediate										

To set driver prohibition input (POT/NOT): If set to 1, no effect on homing mode.

Set value	Explanation
0	POT → Positive direction drive prohibited NOT → Negative direction drive prohibited
1	POT and NOT invalid
2	Any single sided input from POT or NOT might cause Er260

Pr5.06	Label	Servo-off mode			Mode							F
	Range	0~5	Unit	—	Default	0	PNU	6006				
	Activation	After restart										

To set servo driver disable mode and status.

Value	Explanation	
	Mode	*Status*
0	Servo braking	Dynamic braking
1	Free stopping	Dynamic braking
2	Dynamic braking	Dynamic braking
3	Servo braking	Free-run
4	Free stopping	Free-run
5	Dynamic braking	Free-run

Pr5.09	Label	Main power-off detection time			Mode							F
	Range	50~2000	Unit	ms	Default	50	PNU	6009				
	Activation	Immediate										
	To set duration time for detection of main power-off or low voltage supply.											

Pr5.10	Label	Servo-off due to alarm mode			Mode							F
	Range	0~2	Unit	-	Default	0	PNU				6010	
	Activation	After restart										

To set servo driver disable mode and status if alarm is triggered.
Alarm type 2:

Set value	Explanation	
	Mode	*Status*
0	Servo braking	Dynamic braking
1	Free stopping	Dynamic braking
2	Dynamic braking	Dynamic braking
3	Servo braking	Free-run
4	Free stopping	Free-run
5	Dynamic braking	Free-run

Alarm type 1:

Set value	Explanation	
	Mode	*Status*
0	Dynamic braking	Dynamic braking
1		
2		
3	Servo braking	Free-run
4	Free stopping	Free-run
5	Dynamic braking	Free-run

Pr5.11	Label	Servo braking torque setting			Mode							F
	Range	0~500	Unit	%	Default	0	PNU				6011	
	Activation	Immediate										

To set torque limit for servo braking mode.
If Pr5.11 = 0, use torque limit as under normal situation.

Pr5.12	Label	Overload level setting			Mode							F
	Range	0~115	Unit	%	Default	0	PNU				6012	
	Activation	Immediate										

If Pr5.12 = 0, overload level = 115%
Use only when overload level degradation is needed.

Pr5.13	Label	Overspeed level settings	Mode							F

	Range	0~10000	**Unit**	RPM	**Default**	0	**PNU**	6013
	Activation	Immediate						

If motor speed exceeds Pr5.13, Er1A0 might occur.
When Pr5.13 = 0, overspeed level = max. motor speed x 1.2

Pr5.15	**Label**	I/O digital filter			**Mode**							**F**
	Range	0~255	**Unit**	0.1ms	**Default**	10	**PNU**	6015				
	Activation	Immediate										

Digital filtering of I/O input. Overly large value set will cause control delay.

Pr5.20	**Label**	Position unit settings			**Mode**							**F**
	Range	0~2	**Unit**	—	**Default**	2	**PNU**	6020				
	Activation	Disable										

Set value	Unit
0	Encoder unit
1	Command unit
2	0.0001rev

Command unit: Pulse from host (Affected by electronic gear ratio)
Encoder unit: Pulse from encoder (Related to encoder resolution)
Pr5.20 can only be modified when axis is disabled as it will clear position data.

Pr5.21	**Label**	Torque limit selection			**Mode**							**F**
	Range	0~2	**Unit**	—	**Default**	2	**PNU**	6021				
	Activation	Immediate										

Set value	Positive limit value	Negative limit value
0	Pr0.13	Pr0.13
1	Pr0.13	Pr5.22
2	Negative or positive torque limit is controlled by Telegram 750. [Min. absolute value of either positive or negative limit value will be applied]	

Pr5.22	**Label**	2nd torque limit			**Mode**							**F**
	Range	0~500	**Unit**	%	**Default**	300	**PNU**	6022				
	Activation	Immediate										

Limited by motor max. torque.

Pr5.28	**Label**	LED initial status			**Mode**							**F**

	Range	0~35	**Unit**	—	**Default**	34	**PNU**	6028
	Activation	After restart						

To set content display on front panel of the servo driver at servo driver power on.

Set value	Content	Set value	Content	Set value	Content
0	Position command deviation	15	Overload rate	30	No. of encoder communication error
1	Motor speed	16	Inertia ratio	31	Accumulated operation time
2	Position command velocity	17	No rotation cause	32	Automatic motor identification
3	Velocity control command	18	No. of changes in I/O signals	33	Driver temperature
4	Actual feedback torque	19	Number of over current signals	34	Servo status
5	Sum of feedback pulse	20	Absolute encoder data	35	/
6	Sum of command pulse	21	Single turn position		
7	Maximum torque during motion	22	Multiturn position		
8	/	23	Communication axis address		
9	Control mode	24	Encoder position deviation		
10	I/O signal status	25	Motor electrical angle		
11	/	26	Motor mechanical Angle		
12	Error cause and history record	27	Voltage across PN		
13	Alarm code	28	Software version		
14	Regenerative load rate	29	/		

Pr5.37	**Label**	Torque limit duration during initialization			**Mode**							**F**
	Range	0~5000	**Unit**	ms	**Default**	500	**PNU**				2537h	
	Activation	Immediate										

To set time threshold for output torque to reach limit under torque initialization mode.
Only applicable for torque initialization method -6 to -1
Under torque initialization mode, motor torque reached Pr5.39 and the duration reaches Pr5.37 before moving into next step.

Pr5.39	**Label**	3rd torque limit			**Mode**							**F**
	Range	0~500	**Unit**	%	**Default**	80	**PNU**				6039	

	Activation	Immediate
To set torque limit during torque initialization Between max. torque 6072 and Pr5.22, actual torque limit will take smaller value.		

Pr5.40	**Label**	D41 set value			**Mode**								**F**
	Range	0x0~0xFFFFF	**Unit**	%	**Default**	0X30C		**PNU**		6040			
	Activation	Immediate											
Set object word monitored by D41, index (left 4 bits) + sub-index (right 1 bit), if monitoring 0x6092-01, set Pr5.40 to 0x60921.													

3.2.7【Class 6】Other settings

Pr6.01	**Label**	Encoder zero position compensation			**Mode**								**F**
	Range	0~360	**Unit**	°	**Defaul t**	0		**PNU**		7001			
	Activation	After restart											
Angle of the encoder after zero position calibration													

Pr6.03	**Label**	JOG trial run torque command			**Mode**								**F**
	Range	0~350	**Unit**	%	**Default**	350		**PNU**		7003			
	Activation	Immediate											
To set torque for JOG trial run command.													
Pr6.04	**Label**	JOG trial run velocity command			**Mode**								**F**
	Range	0~10000	**Unit**	r/min	**Default**	30		**PNU**		7004			
	Activation	Immediate											
To set velocity for JOG trial run command.													

Pr6.05	**Label**	Position 3rd gain valid time			**Mode**								**F**
	Range	0~10000	**Unit**	0.1ms	**Default**	0	**PNU**	7005					
	Activation	Immediate											

To set time for 3rd gain to be valid
When not in use, set Pr6.05=0, Pr6.06=100

Pr6.06	**Label**	Position 3rd gain scale factor			**Mode**								**F**
	Range	0~1000	**Unit**	100%	**Default**	100	**PNU**	7006					
	Activation	Immediate											

Set up the 3rd gain by multiplying factor of the 1st gain

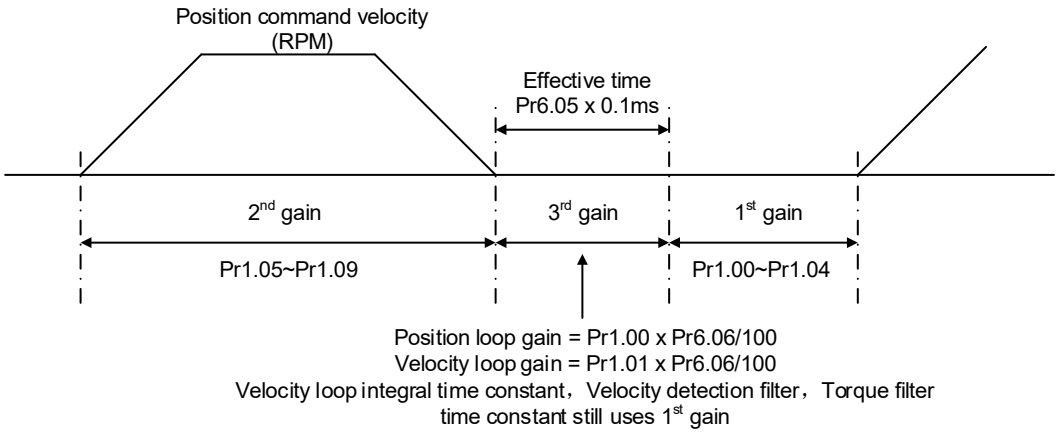

Above diagram is illustrated using Pr1.15 = 7.
3rd gain= 1st gain * Pr6.06/100
Only effective under position control mode. 3rd gain valid when Pr6.05 ≠ 0. Set 3rd gain value in Pr6.06. When 2nd gain switches to 1st gain, it will go through 3rd, switching time is set in Pr1.19.

Pr6.07	**Label**	Torque command additional value			**Mode**								**F**
	Range	-100~100	**Unit**	%	**Default**	0	**PNU**	7007					
	Activation	Immediate											

To set torque forward feed additional value of vertical axis.
Applicable for loaded vertical axis, compensate constant torque.
Application: When load move along vertical axis, pick any point from the whole motion and stop the load at that particular point with motor enabled but not rotating. Record output torque value from d04, use that value as torque command additional value (compensation value)

Pr6.08	**Label**	Positive direction torque compensation value			**Mode**								**F**
	Range	-100~100	**Unit**	%	**Default**	0	**PNU**	7008					
	Activation	Immediate											

Pr6.09	Label	Negative direction torque compensation value			Mode							F
	Range	-100~100	Unit	%	Default	0	PNU	7009				
	Activation	Immediate										

To reduce the effect of mechanical friction in the movement(s) of the axis. Compensation values can be set according to needs for both rotational directions.

Applications:

1. When motor is at constant speed, d04 will deliver torque values.

Torque value in positive direction = T1;

Torque value in negative direction = T2

Pr6.08/Pr6.09 = $T_f = \frac{|T1 - T2|}{2}$

Pr6.11	Label	Current response settings			Mode							F
	Range	50~100	Unit	%	Default	100	PNU	7011				
	Activation	Immediate										

To set driver current loop related effective value ratio

Pr6.14	Label	Max. time to stop after disabling			Mode							F
	Range	0~3000	Unit	ms	Default	500	PNU	7014				
	Activation	Immediate										

To set the max. time allowed for the axis to stop on emergency stop or normal axis disabling. After disabling axis, if motor speed is still higher than Pr4.39 but the time set in Pr6.14 is reached, BRK_ON given and holding brake activated.
BRK_ON given time is determined by Pr6.14 or when motor speed goes below Pr4.39, whichever comes first.

Applications:
1. After disabling axis, if motor speed is still higher than Pr4.39 but the time set in Pr6.14 is reached, BRK_ON given and holding brake activated.
2. After disabling axis, if motor speed is already lower than Pr4.39 but the time set in Pr6.14 is not yet reached, BRK_ON given and holding brake activated.

Pr6.20	Label	Trial run distance			Mode							F
	Range	0~1200	Unit	0.1rev	Default	10	PNU		7020			
	Activation	Immediate										
JOG (Position control) : Distance travel of each motion												

Pr6.21	Label	Trial run waiting time			Mode							F
	Range	0~30000	Unit	ms	Default	300	PNU		7021			
	Activation	Immediate										
JOG (Position control) : Waiting time after each motion												

Pr6.22	Label	No. of trial run cycles			Mode							F
	Range	0~32767	Unit	PCS	Default	5	PNU		7022			
	Activation	Immediate										
JOG (Position control) : No. of cycles												

Pr6.25	Label	Trial run acceleration			Mode							F
	Range	0~10000	Unit	ms/(1000rpm)	Default	200	PNU		7025			
	Activation	Immediate										
To set the acceleration/deceleration time for JOG command between 0 rpm to 1000 rpm												

Pr6.28	Label	Velocity observer gain			Mode							F
	Range	0~32767	Unit	—	Default	0	PNU		7028			
	Activation	Immediate										
0: Default stable gain; Modifications are not recommended.												

Pr6.29	Label	Velocity observer bandwidth			Mode							F
	Range	0~32767	Unit	ms	Default	0	PNU		7029			
	Activation	Immediate										
0: Default stable bandwidth; Modifications are recommended.												

Pr6.34	Label	Frame error window time			Mode							F
	Range	0~32767	Unit	ms	Default	100	PNU		7034			
	Activation	Immediate										
To set data frame error detection window time												

Pr6.35	Label	Frame error window			Mode							F
	Range	0~32767	Unit	-	Default	50	PNU		7035			
	Activation	Immediate										
	To set data frame error detection window											

Pr6.54	Label	Absolute value rotation mode denominator setting			Mode							F
	Range	0~32766	Unit	-	Default	0	PNU		7054			
	Activation	After restart										
	To set denominator of absolute encoder in rotational mode. When Pr0.15 = 2 and use in combination with Pr6.54: Feedback load position = $\frac{\text{Pr6.63}}{\text{Pr6.54}}$ x Electronic gear ratio											

Pr6.56	Label	Blocked rotor alarm torque threshold			Mode							
	Range	0~300	Unit	%	Default	300	PNU		7056			
	Activation	Immediate										
	To set the torque threshold of blocked rotor to trigger alarm. (Alarm triggered if torque output% larger than threshold value & under 10rpm) If Pr6.56 = 0, blocked rotor alarm deactivated. (This applicable only to 220VAC drivers) If motor speed is 10rpm or above, Er102 won't be triggered.											

Pr6.57	Label	Blocked rotor alarm delay time			Mode							
	Range	0~1000	Unit	ms	Default	400	PNU		7057			
	Activation	Immediate										
	To set delay time for blocked rotor alarm to trigger											

Pr6.59	Label	Homing mode position threshold			Mode							
	Range	0~100	Unit	0.00001rev	Default	5	PNU		7059			
	Activation	Immediate										
	To set position threshold for homing mode.											

Pr6.61	Label	Z signal holding time			Mode							F
	Range	0~100	Unit	ms	Default	10	PNU	7061				
	Activation	Immediate										

To set the holding time for Z signal to maintain active high

Application:

1. Z signal for homing process
2. Z-phase frequency output pulse width. Unit = 0.1ms;

Please set Pr6.61≥0.2ms if used for 2 applications as above

Pr6.63	Label	Absolute multiturn data upper limit			Mode							F
	Range	0~32766	Unit	rev	Default	0	PNU	7063				
	Activation	After restart										

To set upper limit of multiturn data with absolute encoder set as rotational mode.

When Pr0.15 = 2:

Feedback position =[0 ~ (Pr6.63+1)]x Encoder resolution

3.2.8【Class 7】Factory settings

Please take precaution when modifying Class 7 parameters. Might cause driver errors

Pr7.15	Label	Motor model			Mode							F
	Range	0x0~0x7FFF	Unit	-	Default	0x200	Property	R/W				
	Activation	After restart			Data length		16 bit					

Set value	Description
0x100	Read from EEPROM
[0x200]	Read from Encoder

When Pr7.15 = 0x200(2xx):

Parameter	Label
Pr7.00	Current loop gain
Pr7.01	Current loop integral time
Pr7.05	No. of motor pole pairs
Pr7.06	Motor phase resistance
Pr7.07	Motor D/Q induction
Pr7.08	Motor back EMF coefficient
Pr7.09	Motor torque coefficient
Pr7.10	Motor rated rotational speed
Pr7.11	Motor max. rotational speed
Pr7.12	Motor rated current
Pr7.13	Motor rotor inertia
Pr7.14	Driver power rating
Pr7.16	Encoder
Pr7.17	Motor max. current
Pr7.18	Encoder PNU angle compensation

Pr7.16	Label	Encoder			Mode							F
	Range	0x0~0x200	Unit	-	Default	As per encoder	Property	R/W				
	Activation	After restart			Data length	16 bit						

Set value	Description
0x0	17-bit encoder
0x7	23-bit encoder

3.2.9 【Class A】PN communication

PrA.00	Label	Heartbeat alarm threshold			Mode							F
	Range	0 ~ 65535	Unit	-	Default	50	PNU	925/11000				

Set heartbeat alarm threshold under IRT mode
Default P925 = 50, if error counter exceeds P925, alarm might occur(synchronization lost).

PrA.01	Label	Operation mode			Mode							F
	Range	0 ~ 3	Unit	-	Default	2	PNU	930/11001				

PROFIdrive operation mode

Bit	Description
1	Velocity control mode with ramp generator
2	Position control mode
3	Velocity control mode without ramp generator

PrA.14	Label	Homing			Mode							F
	Range	-2147482648~2147482647	Unit	-	Default	0	PNU	972/11014				

To home axis.

Bit	Description
0	Deactivated
1	Immediate homing
2	Ready to home

PrA.15	Label	Restore to factory default			Mode							F
	Range	-2147482648~2147482647	Unit	-	Default	0	PNU	976/11015				

Restore all driver's parameters back to default.

PrA.16	Label	Save parameters			Mode							F
	Range	-2147482648~2147482647	Unit	-	Default	0	PNU	977/11016				

Save all driver's parameters to ROM. Only configurable parameters are saved.

Bit	Description
0	Deactivated
1	Non-volatile saving. Load upon power on

PrA.22	Label	Sensor settings			Mode							F
	Range	0 ~ 4294967295	Unit	-	Default	2	PNU	979/11022				

Bit	Default	Description
0-3	2	Parameter structure version low bit
4-7	1	Parameter structure version high bit
8-11	1	No. of sensors
12-15	5	Array length of each sensor

PrA.23	Label	Sensor type			Mode							F
	Range	0 ~ 4294967295	Unit	-	Default	2	PNU	979/11023				

Bit	Description
0	0: Rotary encoder 1: Linear encoder
1	0: G1_XIST1 relative position 1: G1_XIST1 absolute position
29	0: 979 value Gx is static. Value won't change when status changes from "parking" to "normal" 1: 979 value changes when status changes from "parking" to "normal"
30	0: If P979 currently invalid (979[1]bit31 = 0), it could be valid when measuring system is in "parking" mode. 1: 979[1] bit31 will be static.
31	0: P979 value Gx invalid 1: P979 value Gx valid

PrA.24	Label	Sensor resolution			Mode							F
	Range	0 ~ 4294967295	Unit	-	Default	0	PNU	979/11024				

Rotary encoder: Single turn pulse count
Linear encoder: Signal period duration (Unit: nm)

PrA.25	Label	Sensor slip factor 1			Mode							F
	Range	0 ~ 4294967295	Unit	-	Default	0	PNU	979/11025				

Gx_XIST1 quadrant information and digit segments

PrA.26	Label	Sensor slip factor 2			Mode							F
	Range	0 ~ 4294967295	Unit	-	Default	0	PNU	979/11026				

Gx_XIST2 quadrant information and digit segments

PrA.27	Label	Sensor multiturn turn count			Mode							F
	Range	0 ~ 4294967295	Unit	-	Default	0	PNU	979/11027				

Bit	Description
0	Incremental encoder (Unable to read absolute value from G2_XIST2)
1	Single turn absolute value
XXX	Multiturn absolute value

PrA.38	Label	User defined receive data value			Mode							F
	Range	-32768~32767	Unit	-	Default	0	PNU	11038				

Display user defined receive data value (PLC -> Driver)

PrA.39	Label	User defined send data value			Mode							F
	Range	-32768~32767	Unit	-	Default	0	PNU	11039				

Display user defined send data value (Driver -> PLC)

PrA.40	Label	User defined receive data setting			Mode							F
	Range	0~5	Unit	-	Default	0	PNU	11040				

Bit	Description
0	Default: No function
1	Torque limit (0x4000 = 300%)
2	DO status (bit0 = D01)

PrA.41	Label	User defined send data setting			Mode							F
	Range	0~5	Unit	-	Default	0	PNU	11041				

Bit	Description
0	Default: No function
1	Actual torque (0x4000 = 300%)
2	DI status (bit0 = DI1)

PrA.42	Label	Communication timeout setting			Mode							F
	Range	0 ~ 100	Unit	-	Default	0	PNU	11042				

To set PROFINET communication timeout duration

PrA.43	Label	Synchronization cycle			Mode							F
	Range	0 ~ 4294967295	Unit	ns	Default	0	PNU	11043				

To set PROFINET communication synchronization cycle duration

PrA.46	Label	IP address			Mode							F
	Range	0 ~ 4294967295	Unit	-	Default	0	PNU	61001/11046				

To set slave IP address

PrA.47	Label	Subnet mask			Mode							F
	Range	0 ~ 4294967295	Unit	-	Default	0	PNU	61001/11047				
	To set slave subnet mask											

PrA.48	Label	Default gateway			Mode							F
	Range	0 ~ 4294967295	Unit	-	Default	0	PNU	61003/11048				
	To set slave gateway											

PrA.49	Label	MAC address low bit			Mode							F
	Range	0 ~ 4294967295	Unit	-	Default	0	PNU	61002/11049				
	To set slave MAC address low 4-bit											

PrA.50	Label	MAC address mid bit			Mode							F
	Range	0 ~ 4294967295	Unit	-	Default	0	PNU	61002/11050				
	To set slave MAC address mid 4-bit											

PrA.51	Label	MAC address high bit			Mode							F
	Range	0 ~ 4294967295	Unit	-	Default	0	PNU	61002/11051				
	To set slave MAC address high 4-bit											

PrA.62	Label	Telegram selection			Mode							F
	Range	1~65535	Unit	-	Default	111	PNU	922/11062				
	To set telegram for slave axis, include Telegram 1/2/3/5/102/105/7/9/110/111											

PrA.63	Label	Auxiliary telegram selection			Mode							F
	Range	0 ~65535	Unit	-	Default	0	PNU	10063				
	To set auxiliary telegram for slave axis, include Telegram 750/900/901											

3.2.10 【Class B】PN-EPOS

PrB.00	Label	Synchronization offset baseline			Mode							F
	Range	0 ~2147483647	Unit	0.1μs	Default	20	PNU	12000				
	Synchronization offset baseline time duration											

PrB.01	Label	Min synchronization cycle time			Mode							F
	Range	0 ~4294967295	Unit	μs	Default	250	PNU	12001				
	Minimum value of synchronization cycle time											

PrB.02	Label	Max synchronization cycle time			Mode							F
	Range	0 ~4294967295	Unit	μs	Default	100000	PNU	12002				
	Maximum value of synchronization cycle time											

PrB.04	Label	Planner state machine			Mode							F
	Range	0 ~4294967295	Unit	-	Default	0	PNU	12004				
	Internal planner state machine											

PrB.05	Label	Internal motion state machine			Mode							F
	Range	0 ~4294967295	Unit	-	Default	0	PNU	12005				

PrB.06	Label	Internal control data			Mode							F
	Range	0 ~2147483647	Unit	-	Default	0	PNU	12006				

PrB.07	Label	Internal positioning data			Mode							F
	Range	0 ~4294967295	Unit	-	Default	0	PNU	12007				

PrB.08	Label	Internal settings data			Mode							F
	Range	0 ~4294967295	Unit	-	Default	0	PNU	12008				

PrB.09	Label	Homing Z-signal recorded position			Mode							F
	Range	-2147483647~2147483647	Unit	-	Default	0	PNU	12009				
	Position value which Z-signal is recorded in homing process											

PrB.10	Label	Homing position			Mode							F
	Range	-2147483647 ~2147483647	Unit	-	Default	0	PNU	12010				
	Position value after homing is done.											

PrB.11	Label	Homing trigger position			Mode							F
	Range	-2147483647 ~2147483647	Unit	-	Default	0	PNU	12011				
	Position value at the start of homing process											

PrB.12	Label	Homing simulated input			Mode							F
	Range	0 ~4294967295	Unit	-	Default	0	PNU	12012				

PrB.13	Label	Homing settings			Mode							F
	Range	0 ~32767	Unit	-	Default	0x106	PNU	12013				
	To set homing mode											

PrB.14	Label	Max. homing distance			Mode							F
	Range	0 ~2147483647	Unit	-	Default	0	PNU	12014				
	Max. distance in a single homing process.											

PrB.15	Label	Planner command position			Mode							F
	Range	-2147483647 ~2147483647	Unit	-	Default	0	PNU	12015				
	Internal planner command position value											

PrB.16	Label	Planner command velocity			Mode							F
	Range	-2147483647 ~2147483647	Unit	-	Default	0	PNU	12016				
	Internal planner command velocity value											

PrB.17	Label	Planner command torque			Mode							F
	Range	0 ~4294967295	Unit	-	Default	0	PNU	12017				
	Internal planner command torque value											

PrB.18	Label	Planner actual position			Mode							F
	Range	0 ~4294967295	Unit	-	Default	0	PNU	12018				
	Internal planner actual position value											

PrB.19	Label	Planner actual velocity			Mode							F
	Range	0 ~4294967295	Unit	-	Default	0	PNU	12019				
	Internal planner actual velocity value											

PrB.20	Label	Planner actual torque			Mode							F
	Range	0 ~4294967295	Unit	-	Default	0	PNU	12020				
	Internal planner actual torque value											

PrB.24	Label	EPOS max. velocity			Mode							F
	Range	1~40000000	Unit	1000LU/min	Default	30000	PNU	12024				
	Max.velocity under Basic Positioner EPOS											

PrB.25	Label	EPOS max. acceleration			Mode							F
	Range	1 ~20000000	Unit	$1000LU/s^2$	Default	100	PNU	12025				
	Max.acceleration under Basic Positioner EPOS											

PrB.26	Label	EPOS max. deceleration			Mode							F
	Range	1~20000000	Unit	$1000LU/s^2$	Default	100	PNU	12026				
	Max.deceleration under Basic Positioner EPOS											

PrB.27	Label	EPOS software negative position limit			Mode							F
	Range	-2147483647 ~2147483647	Unit	LU	Default	0	PNU	12027				
Basic Positioner EPOS software negative position limit set value												

PrB.28	Label	EPOS software positive position limit			Mode							F
	Range	-2147483647 ~2147483647	Unit	LU	Default	0	PNU	12028				
Basic Positioner EPOS software positive position limit set value												

PrB.29	Label	EPOS deviation threshold			Mode							F
	Range	0 ~40000000	Unit	LU	Default	30000	PNU	12029				
Deviation threshold under Basic Positioner EPOS												

PrB.30	Label	EPOS deviation window time			Mode							F
	Range	0 ~2147483647	Unit	ms	Default	1	PNU	12030				
Deviation window time under Basic Positioner EPOS												

PrB.31	Label	EPOS position deviation			Mode							F
	Range	0 ~2147483647	Unit	LU	Default	10	PNU	12031				
Position deviation under Basic Positioner EPOS												

PrB.32	Label	EPOS positioning window time			Mode							F
	Range	0 ~2147483647	Unit	ms	Default	300	PNU	12032				
Duration time which positioning needs to be done under Basic Positioner EPOS												

PrB.33	Label	EPOS JOG1 velocity			Mode							F
	Range	-40000000 ~40000000	Unit	1000LU/ min	Default	-300	PNU	12033				
Set velocity for EPOS JOG1												

PrB.34	Label	EPOS JOG2 velocity			Mode							F
	Range	-40000000 ~40000000	Unit	1000LU/ min	Default	300	PNU	12034				
Set velocity for EPOS JOG2												

PrB.35	Label	EPOS JOG1 distance			Mode							F
	Range	0 ~2147483647	Unit	LU	Default	1000	PNU	12035				
Set travel distance for EPOS JOG1												

PrB.36	Label	EPOS JOG2 distance			Mode							F
	Range	0 ~2147483647	Unit	LU	Default	1000	PNU	12036				
	Set travel distance for EPOS JOG2											

PrB.37	Label	EPOS Homing mode			Mode							F
	Range	-6~37	Unit	-	Default	19	PNU	12037				
	Homing mode under EPOS, same as CiA402 Home Mode											

PrB.38	Label	EPOS home position			Mode							F
	Range	-2147483647 ~2147483647	Unit	LU	Default	0	PNU	12038				
	Position after EPOS homing											

PrB.39	Label	EPOS home position deviation			Mode							F
	Range	0 ~2147483647	Unit	LU	Default	0	PNU	12039				
	EPOS home position deviation when homing is completed											

PrB.40	Label	EPOS homing high velocity			Mode							F
	Range	1~40000000	Unit	1000LU/ min	Default	5000	PNU	12040				
	Set high velocity for EPOS homing											

PrB.41	Label	EPOS homing low velocity			Mode							F
	Range	1~40000000	Unit	1000LU/ min	Default	300	PNU	12041				
	Set low velocity for EPOS homing											

PrB.42	Label	EPOS homing acceleration/deceleration rate			Mode							F
	Range	0.1~100	Unit	0x4000= 100%	Default	100	PNU	12042				
	Synchronization offset baseline time duration											

PrB.43	Label	MDI target position			Mode							F
	Range	-2147483647 ~2147483647	Unit	LU	Default	0	PNU	12043				
	Target position under MDI mode											

PrB.44	Label	MDI max. velocity			Mode							F
	Range	1~40000000	Unit	1000LU/ min	Default	600	PNU	12044				
	Max. velocity under MDI mode											

PrB.45	Label	MDI ending velocity			Mode							F
	Range	1~40000000	Unit	1000LU/ min	Default	0	PNU	12045				
	Ending velocity under MDI mode											

PrB.46	Label	MDI acceleration rate			Mode							F
	Range	0.1~100	Unit	0x4000= 100%	Default	100	PNU	12046				
	Acceleration rate under MDI mode											

PrB.47	Label	MDI deceleration rate			Mode							F
	Range	0.1~100	Unit	0x4000= 100%	Default	100	PNU	12047				
	Deceleration rate under MDI mode											

PrB.48	Label	Emergency stop deceleration rate			Mode							F
	Range	0.1~100	Unit	0x4000= 100%	Default	0	PNU	12048				
	Deceleration rate during an emergency stop											

PrB.49	Label	I/O function			Mode							F
	Range	-2147483647 ~2147483647	Unit	-	Default	20	PNU	12049				
	Reserved											

PrB.50	Label	Function expansion			Mode							F
	Range	0 ~4294967295	Unit	-	Default	0	PNU	12050				

Bit	Description
0	EPOS mode, position limit switch needs to be activated.
1	EPOS mode, software position limit needs to be activated.
2	EPOS mode, Homing switch can be controlled using PLC.

PrB.58	Label	Ramp stoppage deceleration time			Mode							F
	Range	100~10000	Unit	ms/ 1000rpm	Default	0	PNU	12058				
	Activation	Immediate										
	To set deceleration duration time for ramp stoppage in AC1											

PrB.59	Label	Quick stop deceleration time			Mode							F
	Range	0~10000	Unit	ms/ 1000rpm	Default	0	PNU	12059				
	Activation	Immediate										
	TO set deceleration duration time for quick stop in AC1											

Chapter 4 Servo Drive Operation

4.1 Start with Driver Operation

4.1.1 Checklist before operation

No.	Description
Power supply	
1	The voltage of main and control circuit power supply is within rated values.
2	Power supply polarity is rightly connected.
Wiring	
1	Power supply input is rightly connected.
2	Driver's power output UVW matches UVW terminals on the main circuit.
3	No short circuit of driver's input and output UVW terminals.
4	Signal cables are correctly and well connected.
5	Drivers and motors are connected to ground
6	All cables under stress within recommended range.
7	No foreign conductive objects inside/outside the driver.
Mechanical	
1	Driver and external holding brake are not place near combustibles.
2	Installations of driver, motor and axis is fastened.
3	Movement of motors and mechanical axes are not obstructed.

Power On

Connect 220V power supply into main power supply R, S, T terminals and 220V power supply into control circuit power supply L1C, L2C. After power on, light indicator will light up and front panel will display **rEAdy**, then LED initial status will be displayed. Driver is ready for operation if no alarm occurs.

4.1.2 Trial Run

Servo drive must be disabled before performing trial run. For safety precautions, please JOG under minimal velocity.

Related Parameters

No.	Parameters	Label	Set value	Unit
1	Pr0.01	Control mode settings	10	/
2	Pr6.04	JOG trial run command velocity	User defined	r/min
3	Pr6.25	Trial run acc-/deceleration time	User defined	ms/1000rpm

- *Please make sure the mechanical axis is within the range of motion and travelled distance should not be too long to avoid collision.*
- *Set optimal velocity and acceleration for trial run (not too high!)*
- *Do not modify any gain related parameters during motion to avoid vibration.*

Please refer to “AF_Jog Trial Run” for detailed explanations on how to perform trial run using front panel operation

4.1.3 Motor rotational direction settings

Motor rotational direction can be changed through Pr0.06 without changing the polarity of the input command.

Pr0.06	Name	Command polarity inversion			Mode							F
	Range	0 ~ 1	Unit	—	Default	0		PNU		1006		
	Activation	After restart										

Used to change the rotational direction of the motor.

Set value	Details
0	Polarity of the command is not inversed. The direction of rotation is consistent with the polarity of command.
1	Polarity of command is inversed. The direction of rotation is opposite to the polarity of command.

4.1.4 Holding Brake Settings

Holding brake is designed to hold the axis in position to prevent it from sliding due to applied external forces when the driver is disabled. Holding brake is optional and depends on the model of motor chosen for the application.

- *Please only use holding brake when motor is stopped. No applicable when motor is in motion.*
- *Holding brake coil has no polarity.*
- *Motor should be disabled after stopped.*
- *There is some noise when motors with brake are in motion but that doesn't affect its functionality.*
- *Magnetic sensors might be affected when the holding brake is on. Please be aware.*

Holding brake wiring

EL7-PN series AC Servo Drives supports direct drive holding brakes. Please connect motor holding brake to BRK+ and BRK- on CN1 to control holding brake activation. External relay is not required.

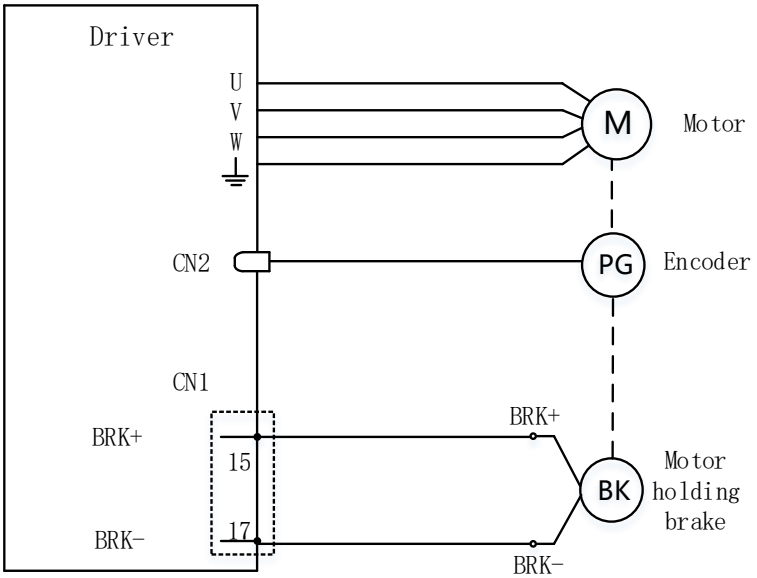

Wiring diagram of motor holding brake

4.1.5 Servo stop

Servo stopping are of 3 different methods: Servo braking method, free stopping method, dynamic braking method.

Stopping method	Description	Details
Servo braking	Servo driver delivers braking torque in opposite direction	Quick stopping but mechanical impact might exist
Free stopping	Motor power cut off. Free to move until velocity = 0. Affected inertia, friction and other factors	Smooth deceleration, low mechanical impact but slow stopping
Dynamic braking	Brake activated when in motion	Quick stopping but mechanical impact might exist

Stopping status	Status after stopped
Free moving	Motor is powered off, rotor is free to rotate
Dynamic braking	Motor is powered off, rotor is not free to rotate
Holding brake stopping	Motor axis is locked, cannot rotate freely

Motor stopping（Servo disabled）- Sequence Diagram

Servo braking method. Status after stopping: Dynamic braking

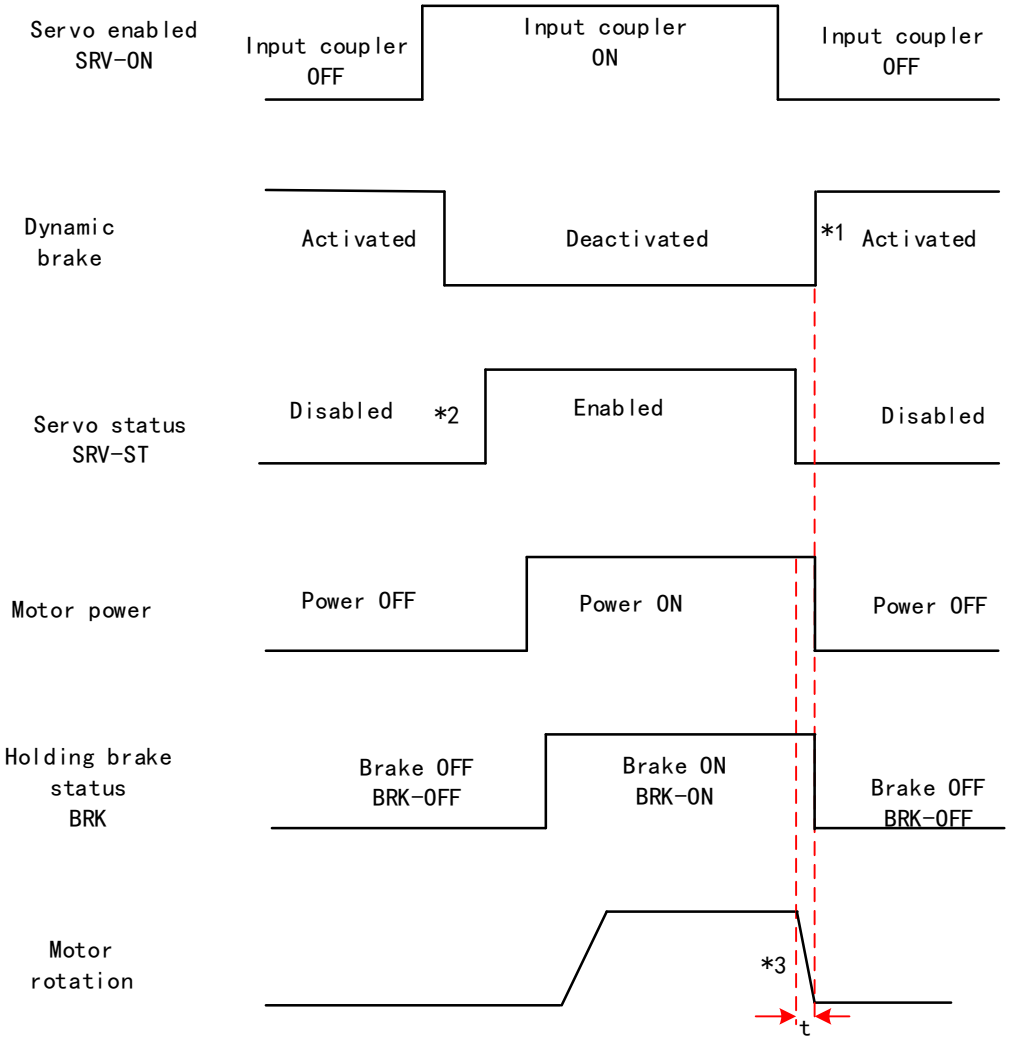

Servo stopping method. Status after stopping: free moving

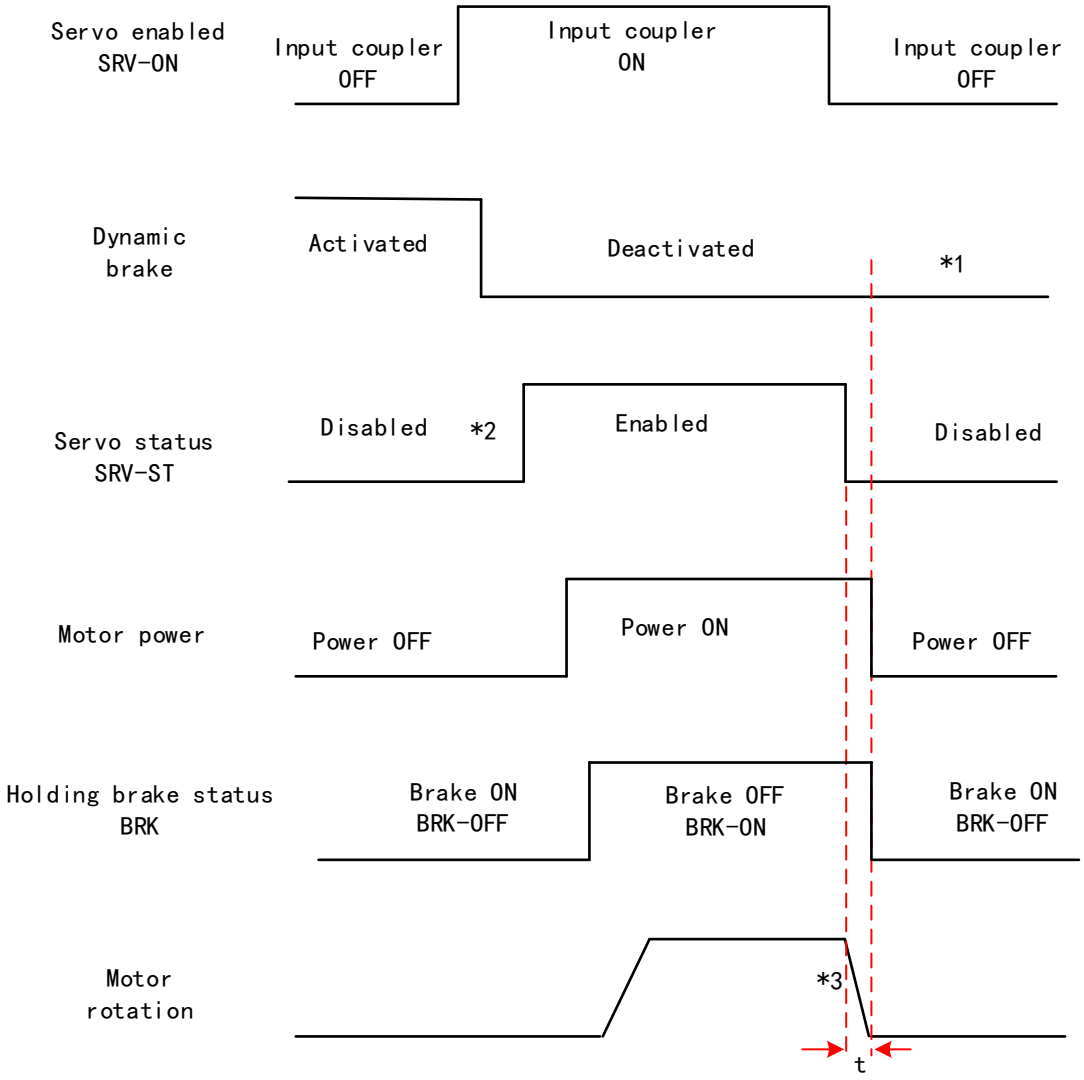

Free stopping method. Status after stopping: Free moving

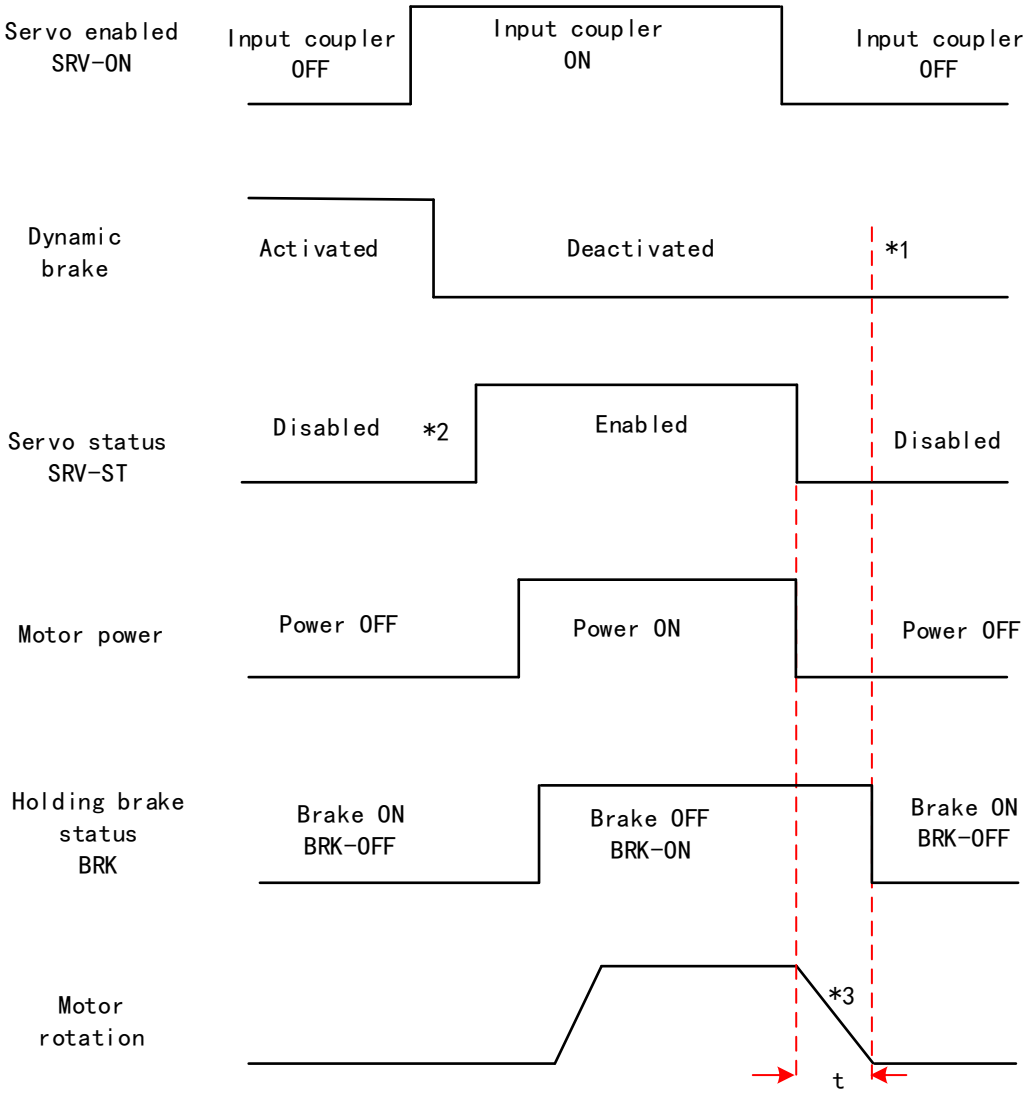

Dynamic braking method. Status after stopping: Free moving

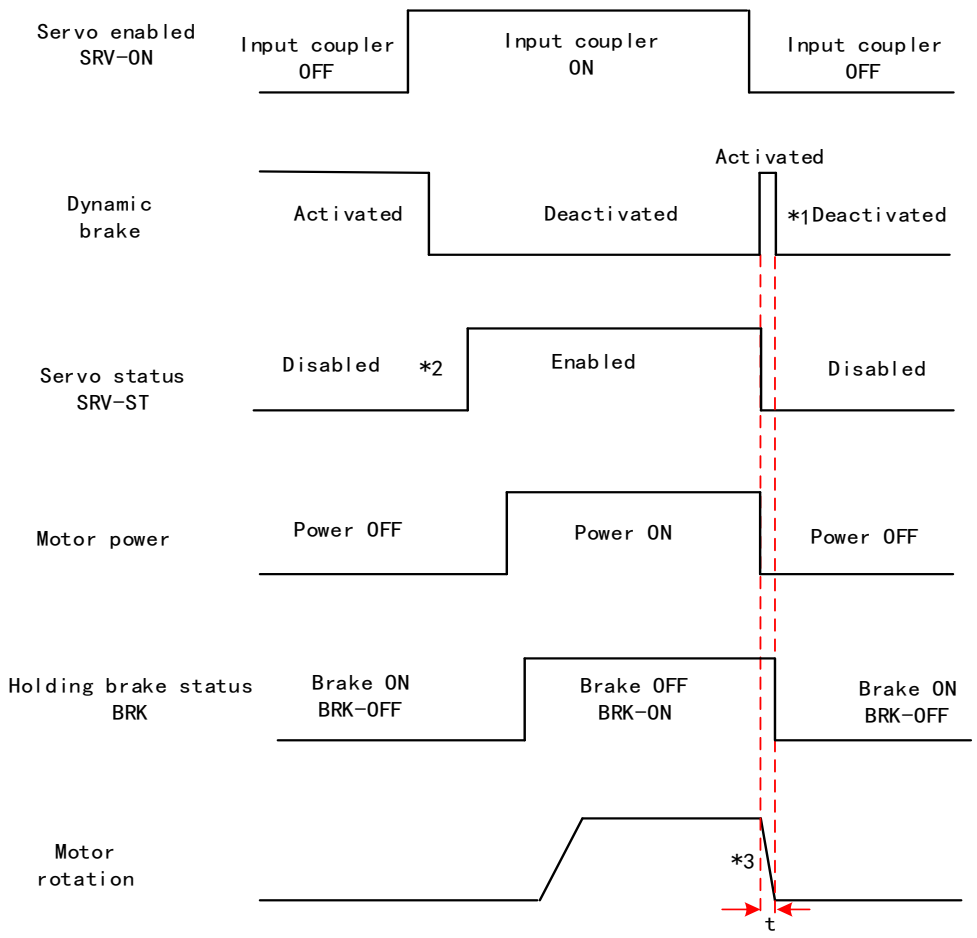

*** 1. Status after stopping is as defined in Pr5.06.*

2. SRV-ST signal is received when servo driver is enabled. Command input is not allowed yet.

3. Servo stopping method is as defined in Pr5.06; braking torque in opposite direction to decelerate the motor is as defined in Pr5.11. Deceleration time t is determined by whichever comes first between time set in Pr6.14 and time needed for motor to drop below velocity set in Pr4.39. After deceleration time t, dynamic braking will be off and holding brake signal will be set to OFF (Holding brake is activated. Although BRK-OFF signal is valid, actual activation of holding brake is dependent on whether the motor comes with holding brake).

4. BRK-ON signal doesn't indicate the activation of holding brake but the validation of the signal. Holding brake is not applied when BRK-ON signal is valid. Same idea goes for BRK-OFF signal.

Stopping when alarm occurs – Sequence Diagram

Servo braking method. Status after stopping: Dynamic braking

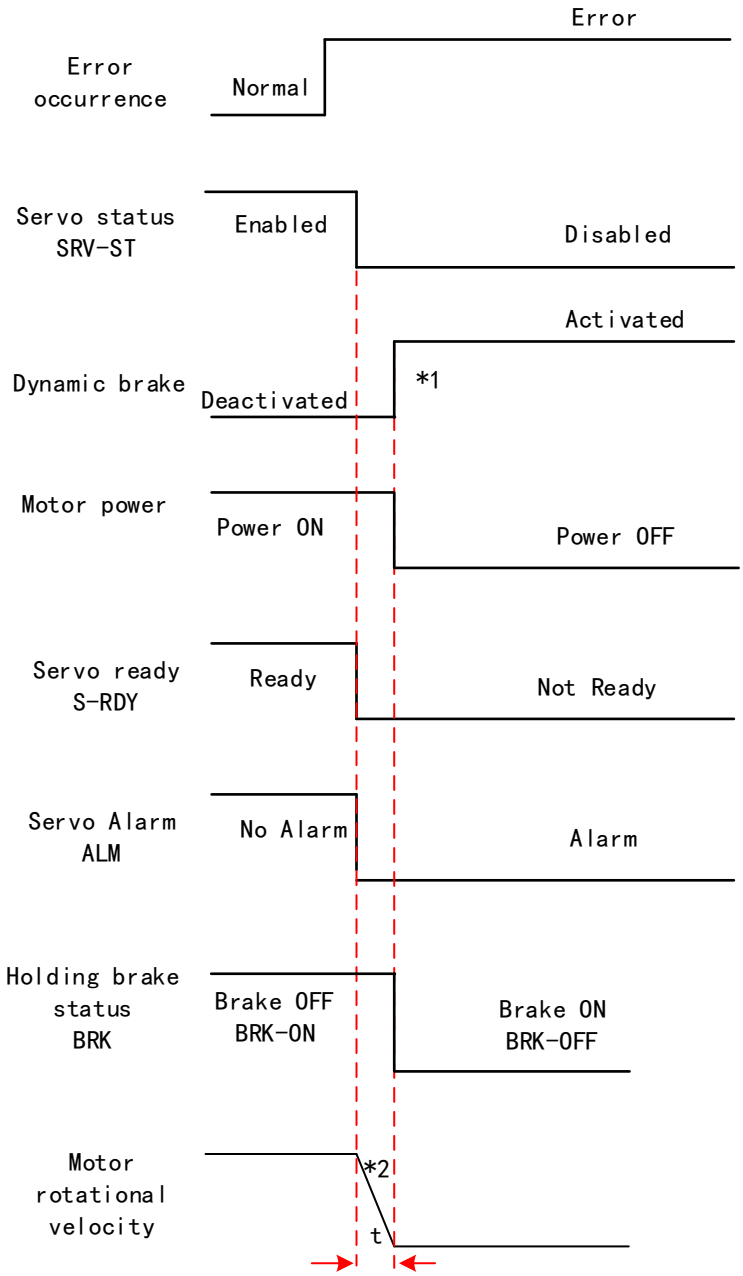

Free stopping method. Status after stopping: Dynamic braking

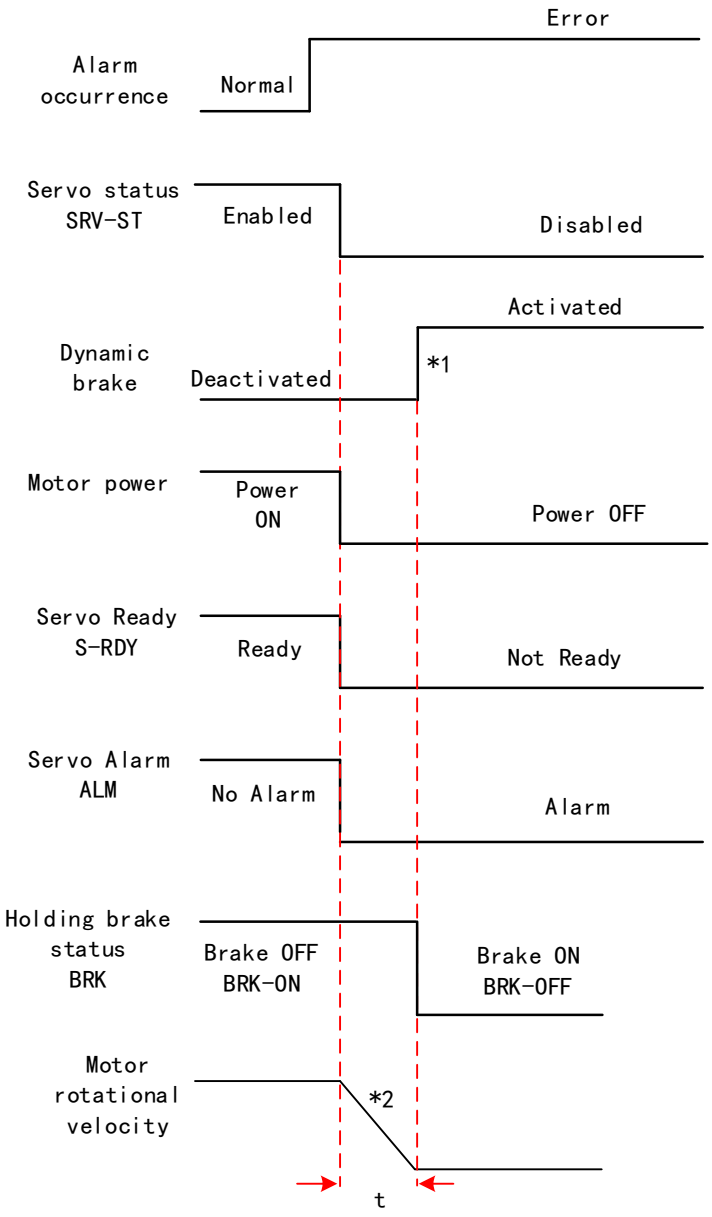

Dynamic braking method. Status after stopping: Dynamic braking

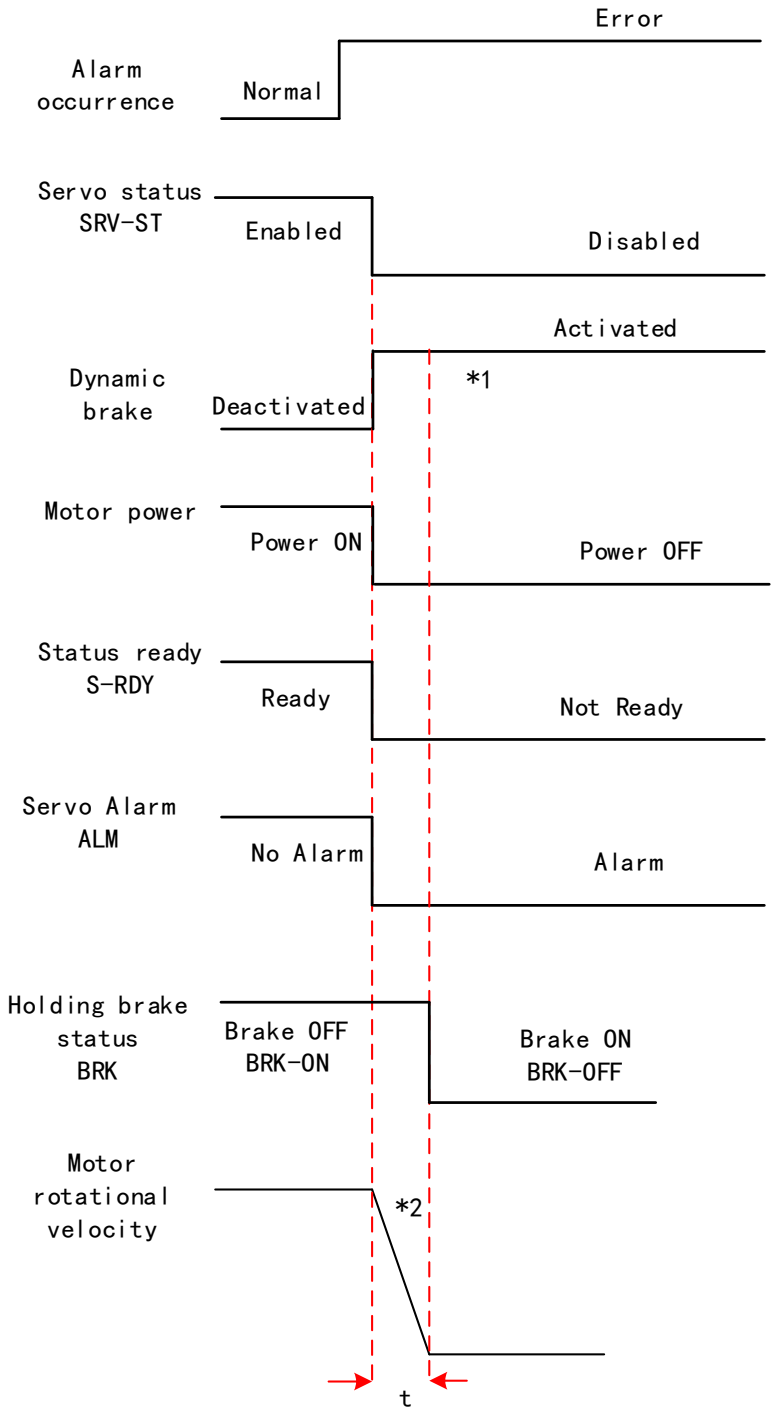

Servo braking method. Status after stopping: Free moving

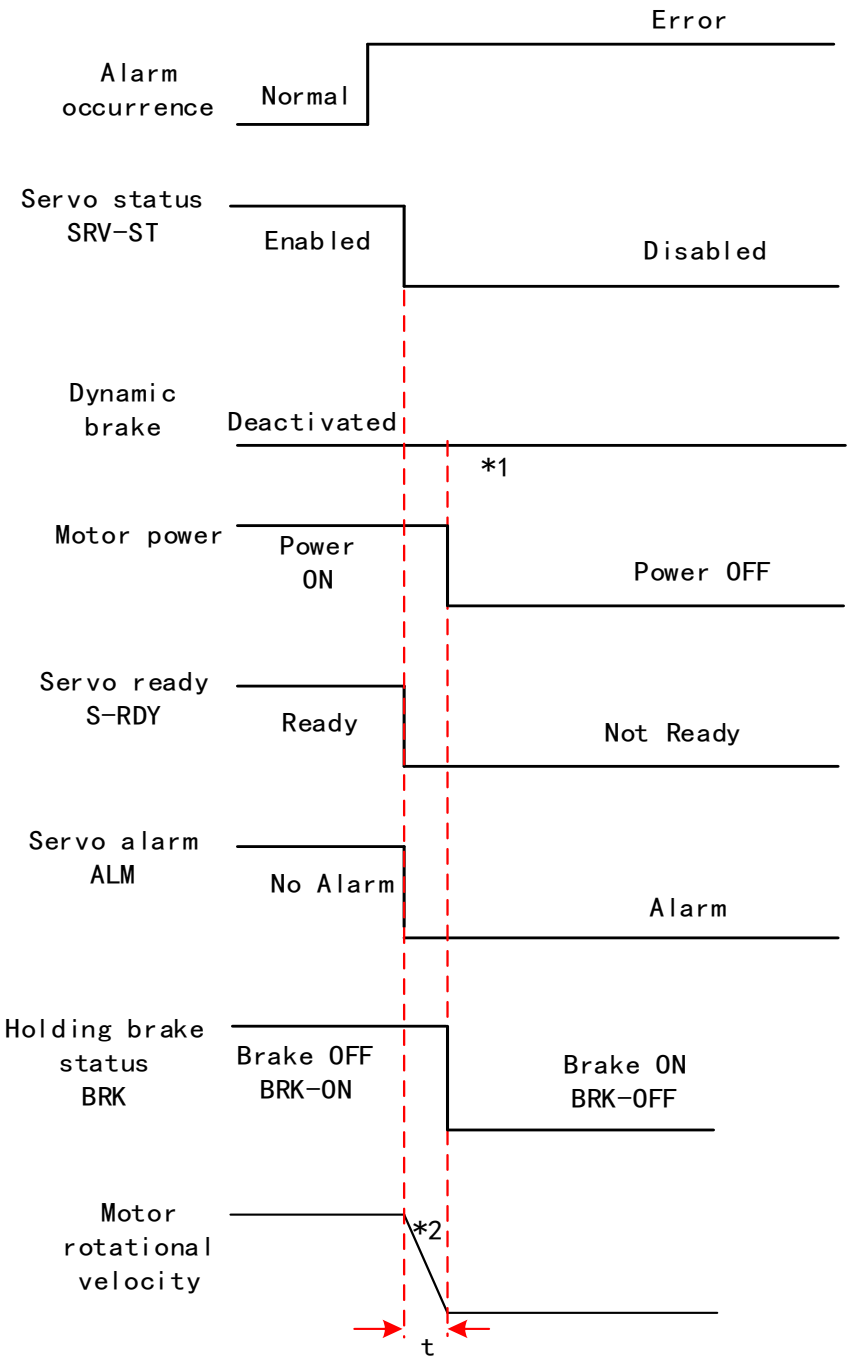

Free stopping method. Status after stopping: Free moving

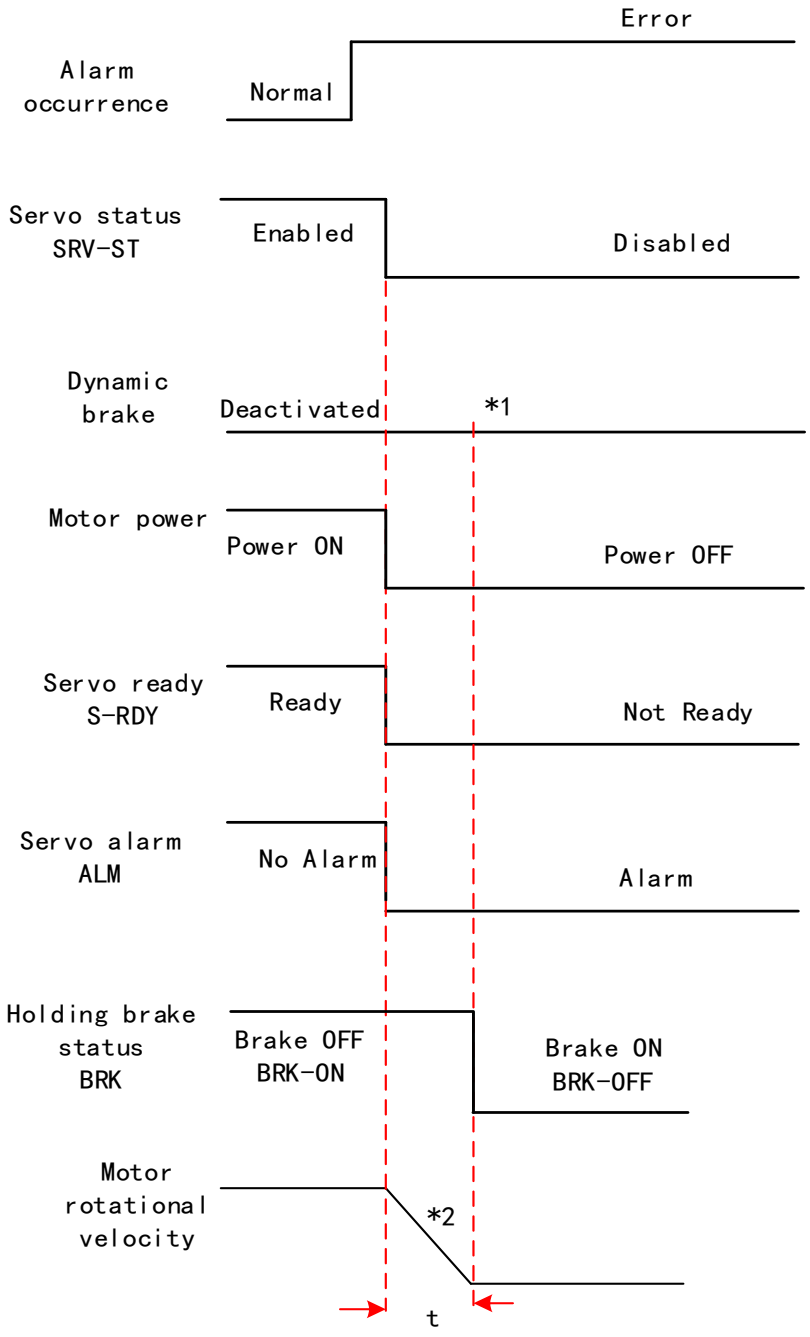

Dynamic braking. Status after stopping: Free moving

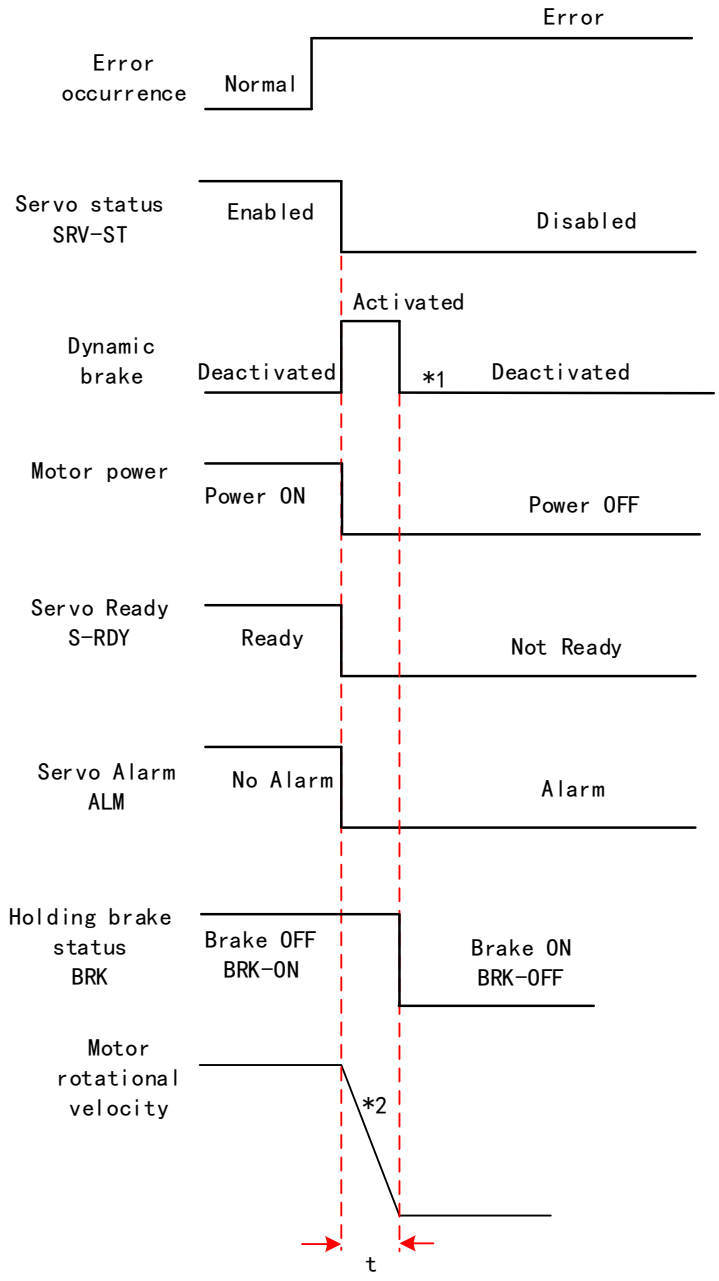

** *1. Status after stopping is as defined in Pr5.10.*

2. Servo stopping method is as defined in Pr5.10. Deceleration time t is determined by whichever comes first between time set in Pr6.14 and time needed for motor to drop below velocity set in Pr4.39. After deceleration time t, dynamic braking will be off and holding brake signal will be set to OFF (Holding brake is activated. Although BRK-OFF signal is valid, actual activation of holding brake is dependent on whether the motor comes with holding brake).

3. BRK-ON signal doesn't indicate the activation of holding brake but the invalidation of the signal. Holding brake is not applied when BRK-ON signal is valid. Same idea goes for BRK-OFF signal.

Alarm clearing - Sequence diagram

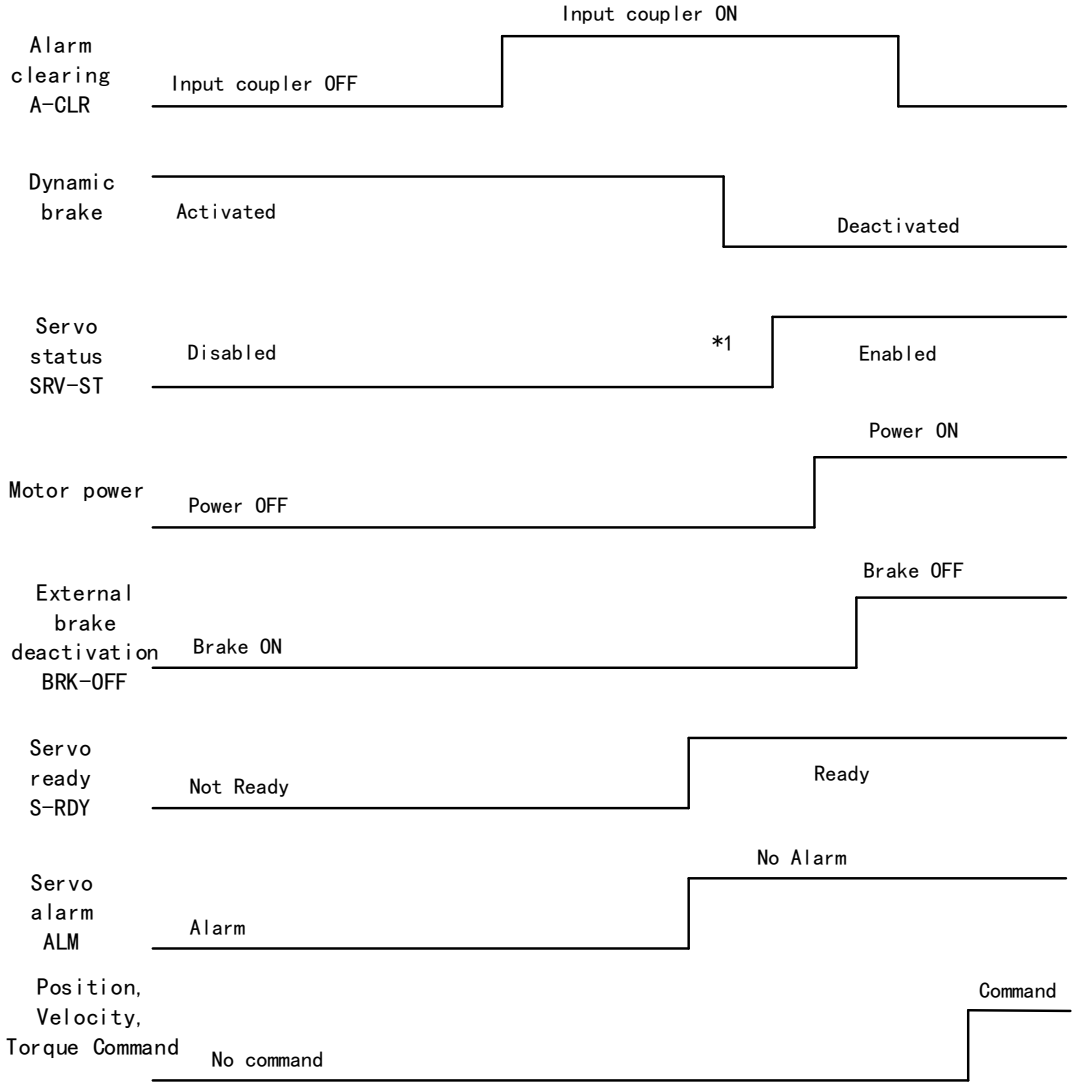

*** 1.SRV-ST signal is received when servo driver is enabled. Command input is not allowed yet*

2. BRK-OFF signal doesn't indicate the deactivation of holding brake but the invalidation of the signal. Holding brake is applied when BRK-OFF signal is invalid.

4.1.6 Electronic gear ratio

When loaded axis moved for 1 command unit, it corresponds to motor encoder unit which is converted in more comprehensible physical units such as μm. The use of electronic gear ratio is to turn the movement in physical units to required pulse count equivalency.

Electronic gear ratio = $\frac{Rotor\ movement\ (Encoder\ unit)}{Loaded\ axis\ movement(Command\ unit)}$

Rotor might be connected to load through reducer or other mechanical structures. Hence, the gear ratio is closely related to reducer gear ratio, position encoder resolution and mechanical dimensions related parameters.

Electronic gear ratio = $\frac{Encoder\ resolution}{Loaded\ axis\ resolution}$

Electronic gear can be set through Pr0.08. If Pr0.08 ≠ 0, Pr0.08 is valid. If Pr0.08 = 0, object dictionary 6092-01 is valid.
Command pulse count per motor revolution needs to be ≥ Encoder Pulse Count per Revolution / 8000.

EL7-RS series comes with motors with 23-bit encoder. Pulse count per revolution for 23-bit encoder = 8388608. From the condition above, the command pulse count per motor revolution for 23-bit encoder ≥ 1049.

Pr0.08	Name	Command pulse counts per revolution			Mode							F
	Range	0~8388608	Unit	-	Default	10000	PNU				2008h	
	Activation	After restart										
To set command pulse counts per motor revolution												

4.2 Front Panel

Servo Driver front panel consists of 5 push buttons and a 8-segments display. Can be used for displaying of status, alarms, functions, parameters setting and auxiliary functions.

Front panel

Buttons and functions

Label	Symbol	Function
Display	/	Consists of 5 push buttons and a 8-segments display
Mode	**M**	To switch between 3 modes: 1. Data monitoring mode : To monitor changes of motion data values 2. Parameters setting mode : To set parameters 3. Auxiliary functions mode: To operate common functions, such as trial run, alarm clearing
Enter	**S**	To enter or confirm
Up	▲	To switch between sub-menus / Increase
Down	▼	To switch between sub-menus / Decrease
Left	◀	To switch between values

4.2.1 Panel Display and Operation

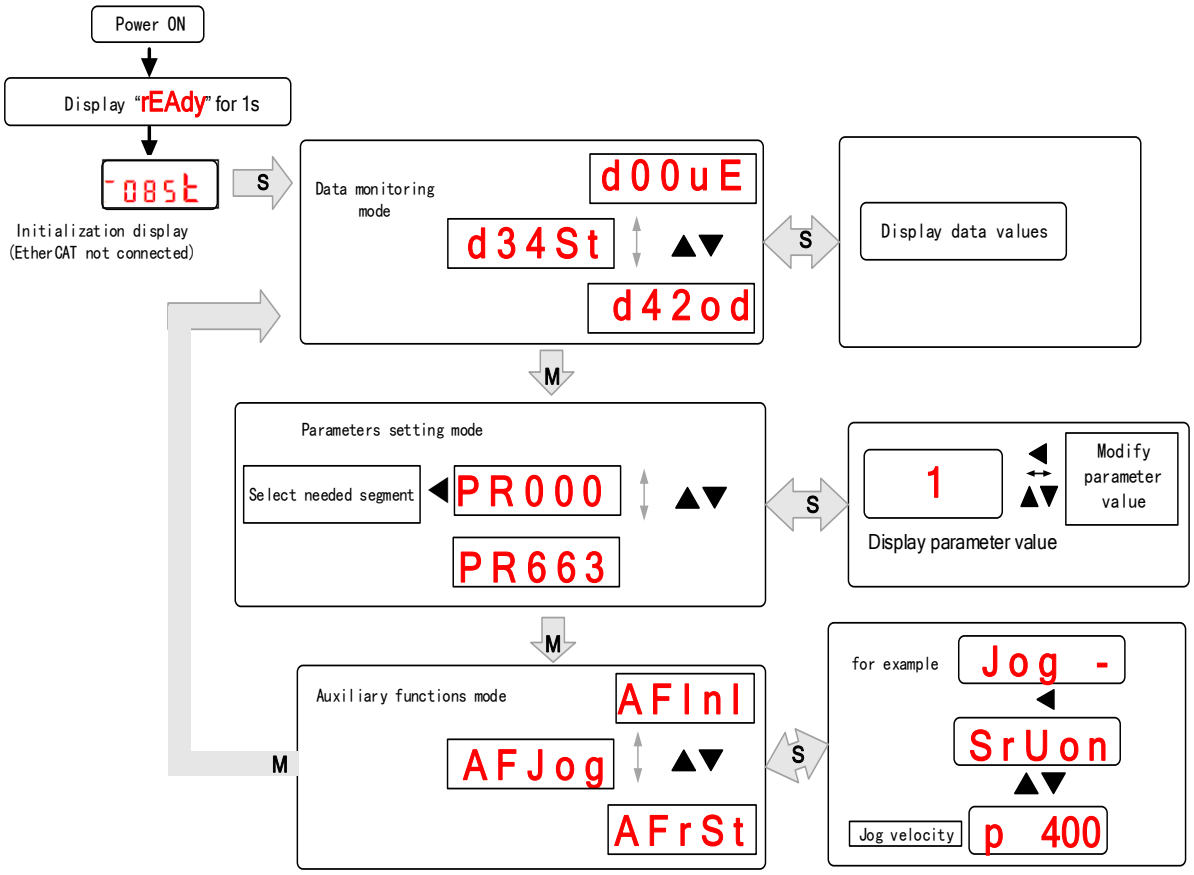

Flow diagram of panel operation

(1) **rEAdY** will be displayed for about 1 second after driver is powered on. Then, automatically enters data monitoring mode and displays initial data value. Otherwise, alarm code will be displayed if error occurs.
(2) Press **M** key to switch between modes.
Data monitoring mode → Parameters setting mode → Auxiliary functions mode
Alarm code will be displayed regardless of any mode if alarm occurs. Press **M** to switch to other modes.
(3) Press ▲or▼to select the type of parameters in data monitoring mode. Press **S** to confirm.
(4) Press ◀ to select current segment in parameters settings mode. Press ▲ or ▼ to increase/decrease the value of segment. Press **S** to confirm the modified value(s) and save the parameters.

4.2.2 Front Panel Locking

To prevent any misuse of the front panel, it can be locked. Limitations when locked are as shown below.

Mode	Limitation
Data monitoring	Not limited
Parameters setting	Parameters can only be read, not modified.
Auxiliary functions	Not limited

To lock and unlock the front panel

	Front Panel	Motion Studio
Lock	①Set Pr5.35 = 1. ②Restart driver. ③Front panel is now locked.	
Unlock	① Please refer to auxiliary function A F U n L. ② Front panel is now unlocked.	① Set Pr5.35 = 0. ② Front panel is now unlocked.

4.2.3 Data Monitoring Mode

EL7 series servo driver offers the function to monitor different types of data in data monitoring mode. After entering this mode, press **S** to monitor any data that starts with **d**. Press **S** again to get back to data monitoring mode and **M** to switch to any other modes.

Data list in data monitoring mode

No.	Label	Descriptions	Display	Unit	Data Format (x = numerical value)
0	d00uE	Position command deviation	**d00uE**	pulse	“xxxx”
1	d01SP	Motor velocity	**d01SP**	r/min	“r xxxx”
2	d02CS	Position control command velocity	**d02CS**	r/min	“xxxx”
3	d03Cu	Velocity control command velocity	**d03Cu**	r/min	“xxxx”
4	d04tr	Actual feedback torque	**d04tr**	%	“xxxx”
5	d05nP	Feedback pulse sum	**d05nP**	pulse	“xxxx”
6	d06cP	Command pulse sum	**d06CP**	pulse	“xxxx”
7	d07	Maximum torque during motion	**d07**	/	“ xxxx”
8	d08FP	Internal command position sum	**d08FP**	pulse	“xxxx”
9	d09cn	Control mode	**d09Cn**	/	EtherCAT: “**CtPoS**”
10	d10Io	I/O signal status	**d10 Io**	/	-
11	d11Ai	Internal usage	**d11Ai**	V	-

12	d12Er	Error cause and record	**d12Er**	/	“Er xxx”
13	d13rn	Warning	**d13rn**	/	“xxx”
14	d14r9	Regeneration load factor	**d14r9**	%	“xxx”
15	d15oL	Overload factor	**d15oL**	%	“xxx”
16	d16Jr	Inertia ratio	**d16Jr**	%	“xxx”
17	d17ch	Motor not running cause	**d17Ch**	/	“CP xxx”
18	d18ic	No. of changes in I/O signals	**d18ic**	/	“xxx”
19	d19	No. of times of overcurrent	**d19**	/	“ xxxx”
20	d20Ab	Position command sum	**d20Ab**	pulse	“ xxxx”
21	d21AE	Single turn encoder data	**d21AE**	pulse	“ xxxx”
22	d22rE	Multiturn encoder data	**d22rE**	r	“ xxxx”
23	d23 id	Communication axis address	**d23id**	/	“id xxx” “Fr xxx”
24	d24PE	Position deviation	**d24PE**	Unit	“ xxxx”
25	d25PF	Motor electrical angle	**d25PF**	pulse	“ xxxx”
26	d26hy	Motor mechanical angle	**d26hy**	pulse	“ xxxx”
27	d27 Pn	Voltage across PN	**d27Pn**	V	“ xxxx”
28	d28 no	Software version	**d28no**	/	“d xxx Servo software” “F xxx Communication software” “p xxx Servo power rating”
29	d29AS	Internal usage	**d29AS**	/	“xxx”
30	d30NS	No. of times of encoder communication error	**d30sE**	/	“xxx”
31	d31 tE	Accumulated operation time	**d31tE**	/	“ xxxx”
32	d32Au	Automatic motor identification	**d32Au**	/	“r xxx Motor no.” “E xxx Servo no.”
33	d33At	Driver temperature	**d33At**	℃	“xxx”
34	d34	Servo status	**d34**	/	“xxx”
35	d35 SF	Internal usage	**d35SF**	/	“xxxxxx”

Description of data monitoring function

When using the front panel to monitor data, data is divided in low/high bit and positive/negative.

Data is differentiated as below.

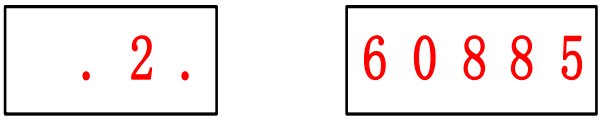

High bit: 1st and 2nd values on the right has two decimal points
Low bit: 1st and 2nd values on the right has no decimal point.

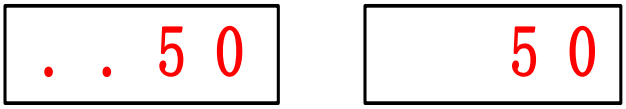

Positive: 1st and 2nd values on the left has no decimal point.
Negative: 1st and 2nd values on the left has two decimal points

1. d00uE Position command deviation

Shows high bit and low bit of position deviation

Position command deviation

Positive: 1st and 2nd values on the left has no decimal point.
Negative: 1st and 2nd values on the left has two decimal points

Press ◀ to switch between low and high bit
Example : Position command deviation=260885

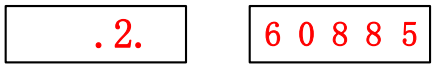

High bit: 1st and 2nd values on the right has two decimal points
Low bit: 1st and 2nd values on the right has no decimal point.

2. d01SP Motor velocity,d02CS Position control command velocity,d03CU Velocity control command velocity

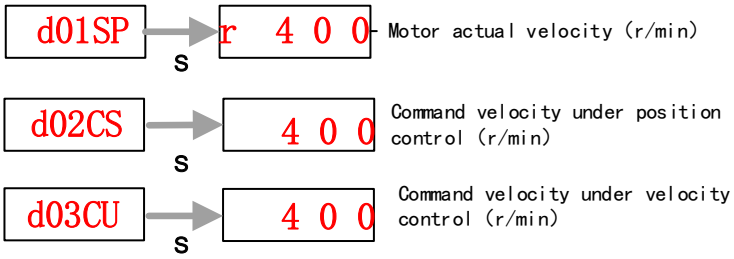

3. d04tr Actual torque feedback

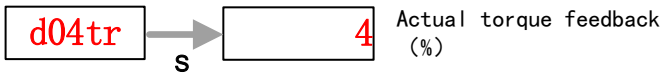

4. d05nP Feedback pulse sum d06CP Command pulse sum

Feedback pulse sum(Encoder feedback pulse)

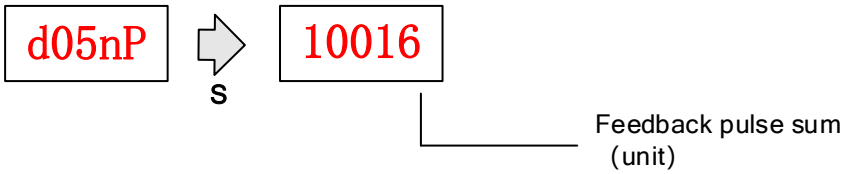

Press ◀ to switch between high/low bit
Example: Feedback pulse sum=210016

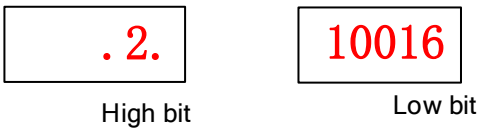

Command pulse sum (Command pulse)

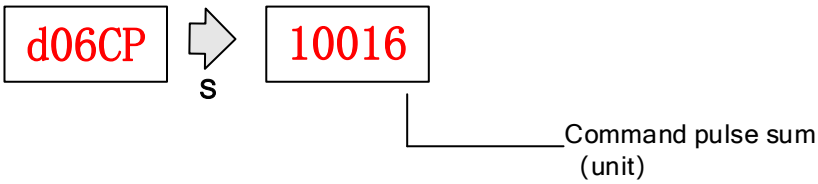

Press ◀ to switch between high/low bit
Example: Command pulse sum=210017

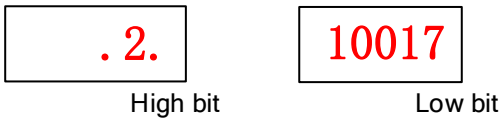

5. d07 Maximum torque during motion

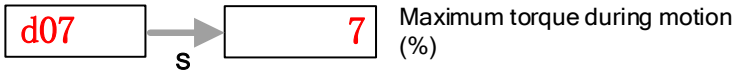

6. d08FP Internal command pulse sum

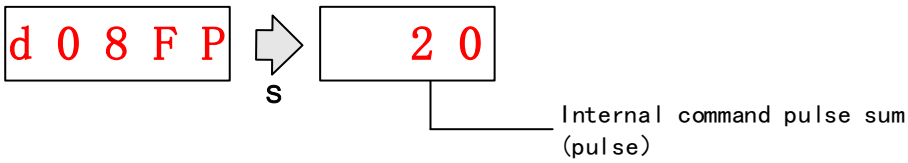

7. d09Cn Control mode

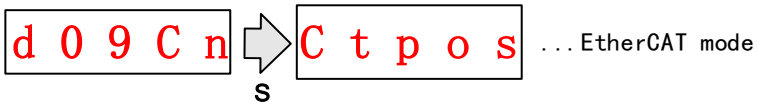

8. d10Io I/O signal status

When the top half of the digital tube is lighted, the signal is valid; when the bottom half of the digital tube is lighted, the signal is not valid. Decimal points represent I/O status, input when lighted, output when not lighted.

- **Input:** From low to high bit(Right to left) DI1,DI2….DI10. Decimal point is lighted to represent input signals.
  In the example below, DI1, DI8 and DI10 input signal is valid; DI2-DI7, DI9 input signal is invalid.

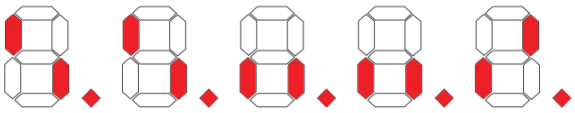

- **Output:** From low to high bit(Right to left) DO1,DO2….DO10. Decimal point is not lighted to represent output signals.
  In the example below, DO1 output signal is valid; DO2-DO10 output signal is invalid.

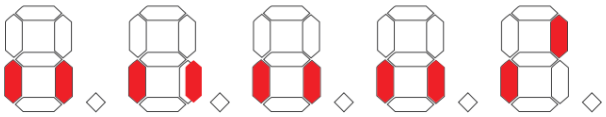

9. d12Er Alarm cause and historical record

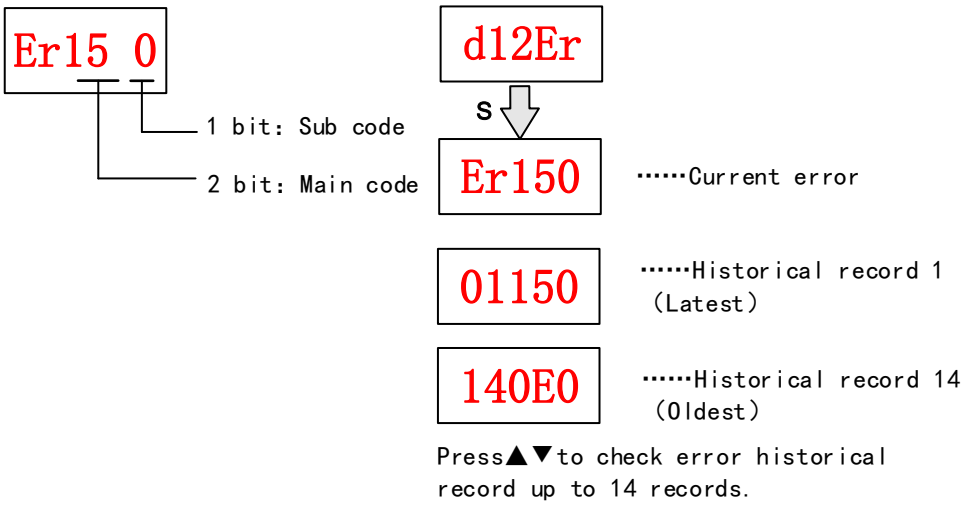

10. d14rg Regenerative load factor d15oL Overload factor

Regenerative load factor（Er120 might occur, if the value increases indefinitely）

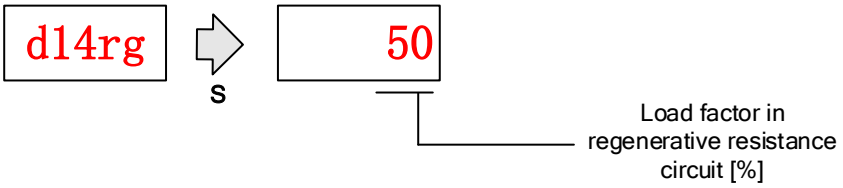

Overload factor（Er100 might occur, if the value increases indefinitely）

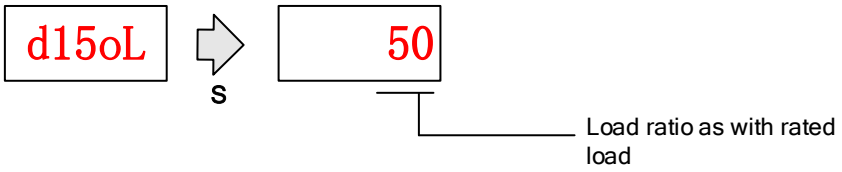

11、d16Jr Inertia ratio

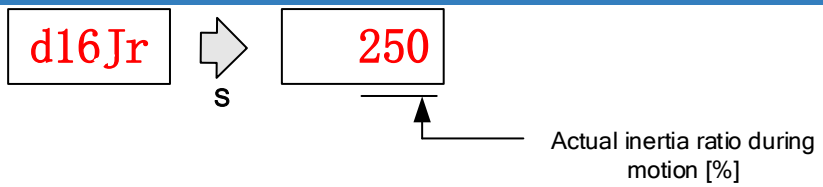

Please refer to Inertia Measuring section for detailed explanations.

12、d17Ch Motor not running cause

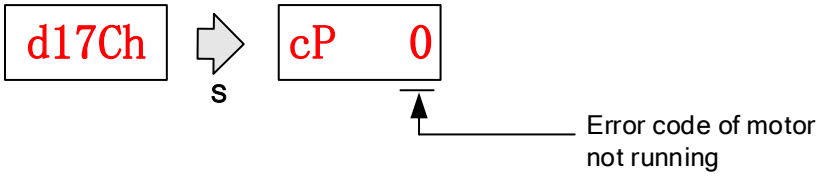

"d17Ch" Motor No Running Cause - Codes & Descriptions

Display Code	Description	Content
cP 1	DC bus undervoltage	/
cP 2	No SRV-ON signal	Servo-ON input (SRV-ON) is not connected to COM-
cP 3	POT/NOT input valid	Pr5.04 = 0, POT is in open circuit, velocity command is in positive direction NOT is in open circuit, velocity command is in negative direction
cP 4	Driver alarm	/
cP 5	Relay not clicked	/
cP 6	Emergency stop valid	/
cP 7	Position command too low	/
cP 8	Torque limitation	/
cP 9	Zero speed clamp valid	Pr3.15 = 1, Zero speed clamp input is open
cP 10	Velocity mode command velocity too low	In velocity mode, the command velocity is too low
cP 12	Torque mode command torque too low	In torque mode, the torque limit is too low.
cP 13	Velocity limit	Emergency stop command from main bus is valid

13、d21AE Single turn encoder data d22rE Multiturn encoder data

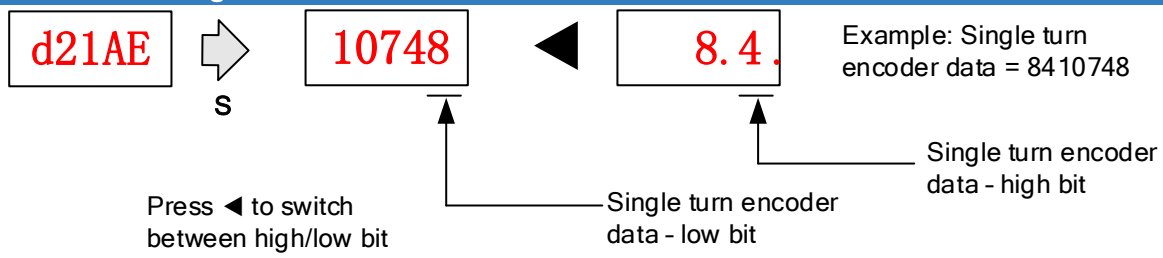

For 23-bit encoder, single turn encoder data = 0~8388607.Each value corresponds to certain position in a single revolution of the rotor, clockwise motion as negative, counter clockwise motion as positive. When counter clockwise single turn data > 8388607, multiturn data +1, clockwise single turn data < 0, multiturn data -1.

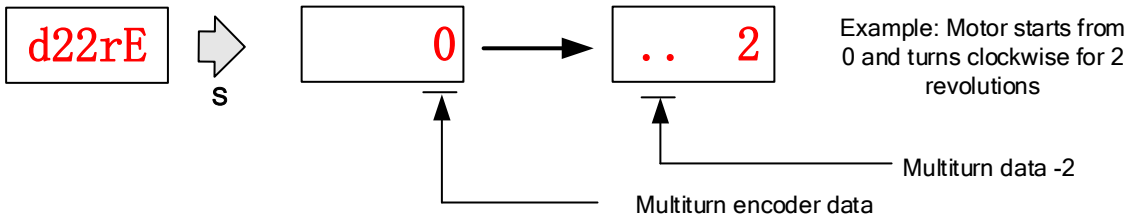

Multiturn encoder data range:-32768~+32767, As no. of revolution goes over range,32767 will jump to -32768、 -32767(counter clockwise)； -32768 will jump to 32767、 32766 (clockwise)

14.d23id Communication axis address

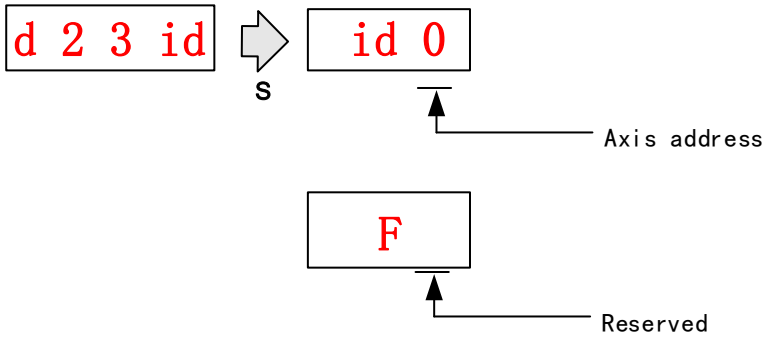

15. d27Pn DC bus voltage

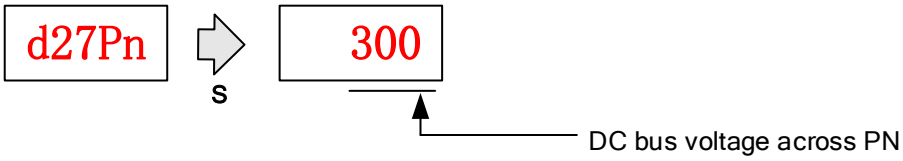

16. d28no Software version

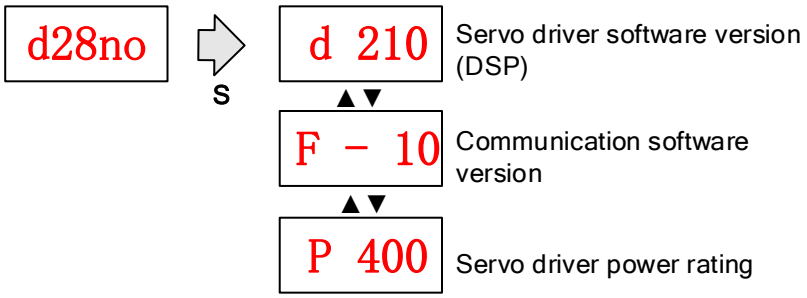

17. d31tE Accumulated operation time

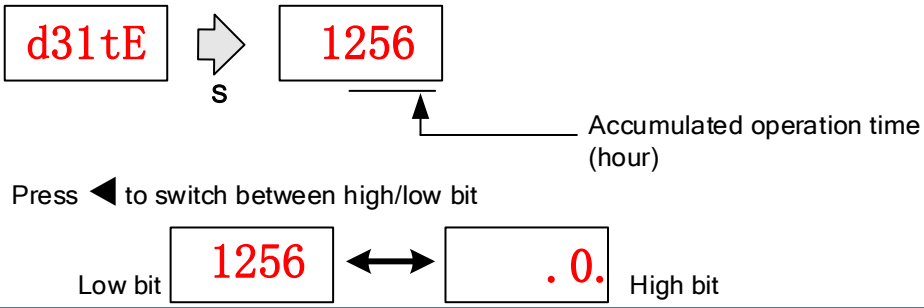

18. d34 Servo driver status display

Driver status: 402 state machine, EtherCAT communication, running mode, running

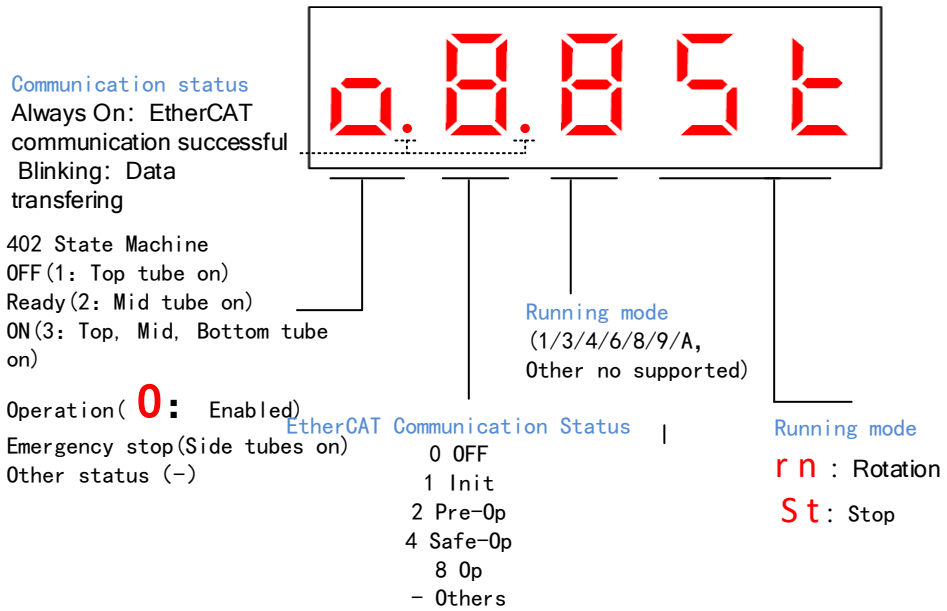

Display setting at power on

- Default setting for initialization display settings at power on is **d34**,if any other display is required, please set on Pr5.28.

Please refer to Pr5.28 for any display content required on the front panel during initialization

Pr5.28	Label	LED initial status			Mode							F
	Range	0~35	Unit	—	Default	34	PNU	6028				
	Activation	After restart										

To set content display on front panel of the servo driver at servo driver power on.

Set value	Content	Set value	Content	Set value	Content
0	Position command deviation	15	Overload rate	30	No. of encoder communication error
1	Motor speed	16	Inertia ratio	31	Accumulated operation time
2	Position command velocity	17	No rotation cause	32	Automatic motor identification
3	Velocity control command	18	No. of changes in I/O signals	33	Driver temperature
4	Actual feedback torque	19	Number of over current signals	34	Servo status
5	Sum of feedback pulse	20	Absolute encoder data	35	/
6	Sum of command pulse	21	Single turn position		
7	Maximum torque during motion	22	Multiturn position		
8	/	23	Communication axis address		
9	Control mode	24	Encoder position deviation		
10	I/O signal status	25	Motor electrical angle		
11	/	26	Motor mechanical Angle		
12	Error cause and history record	27	Voltage across PN		
13	Alarm code	28	Software version		
14	Regenerative load rate	29	/		

4.2.4 Parameter saving using front panel

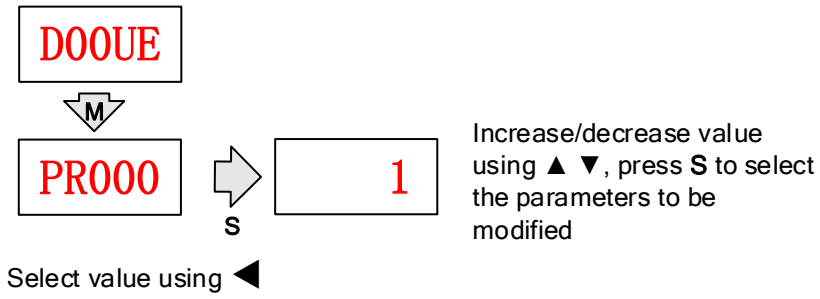

After modifying the selected parameter to desired values, press **S** to confirm and save the changes.

4.3 Auxiliary functions

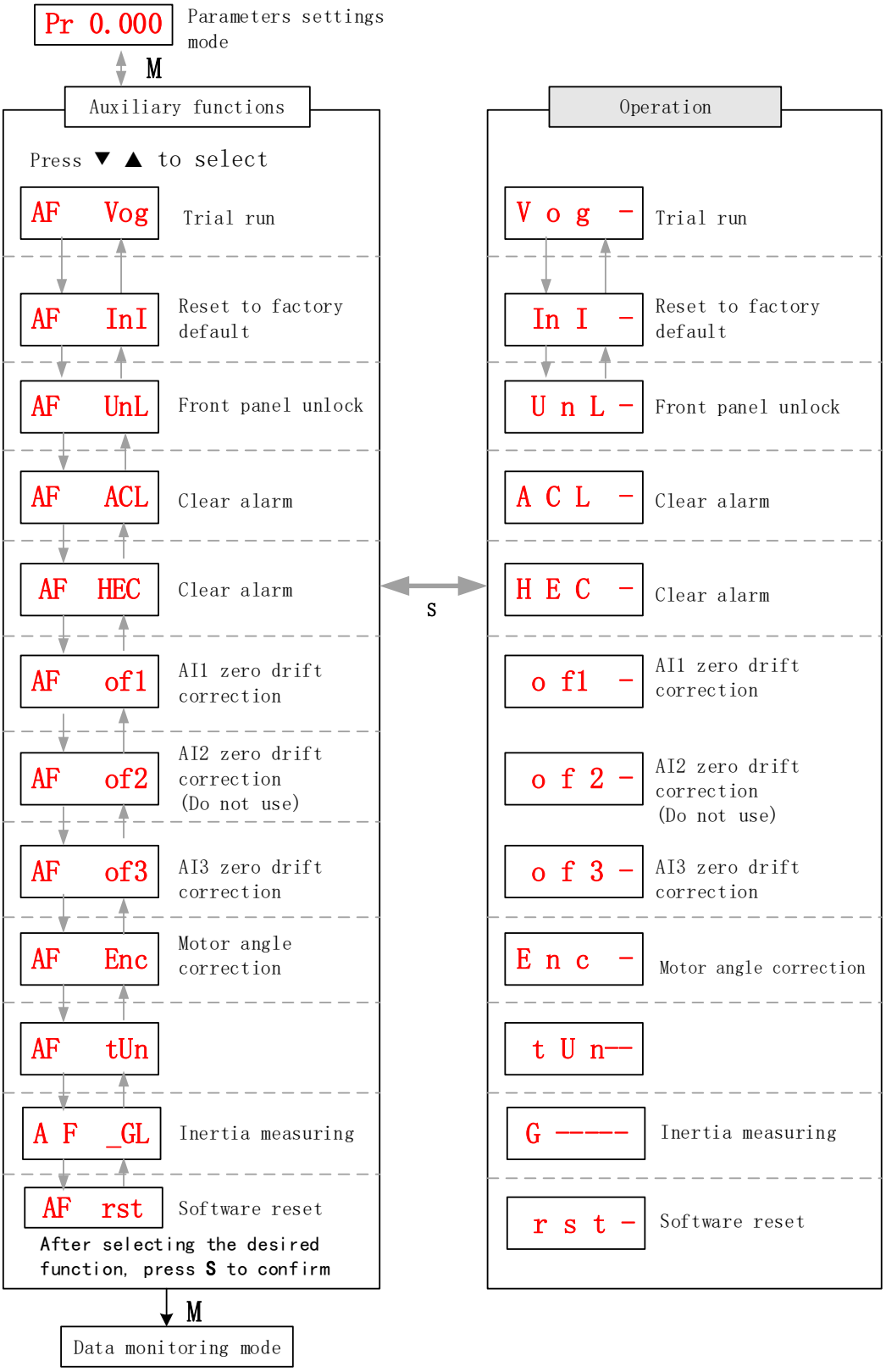

AF jog Trial run

Please disable servo driver before performing any trial run. Please don't modify gain related parameters during trial run to prevent any occurrence of mechanical vibrations. Press **S** to exit trial run.

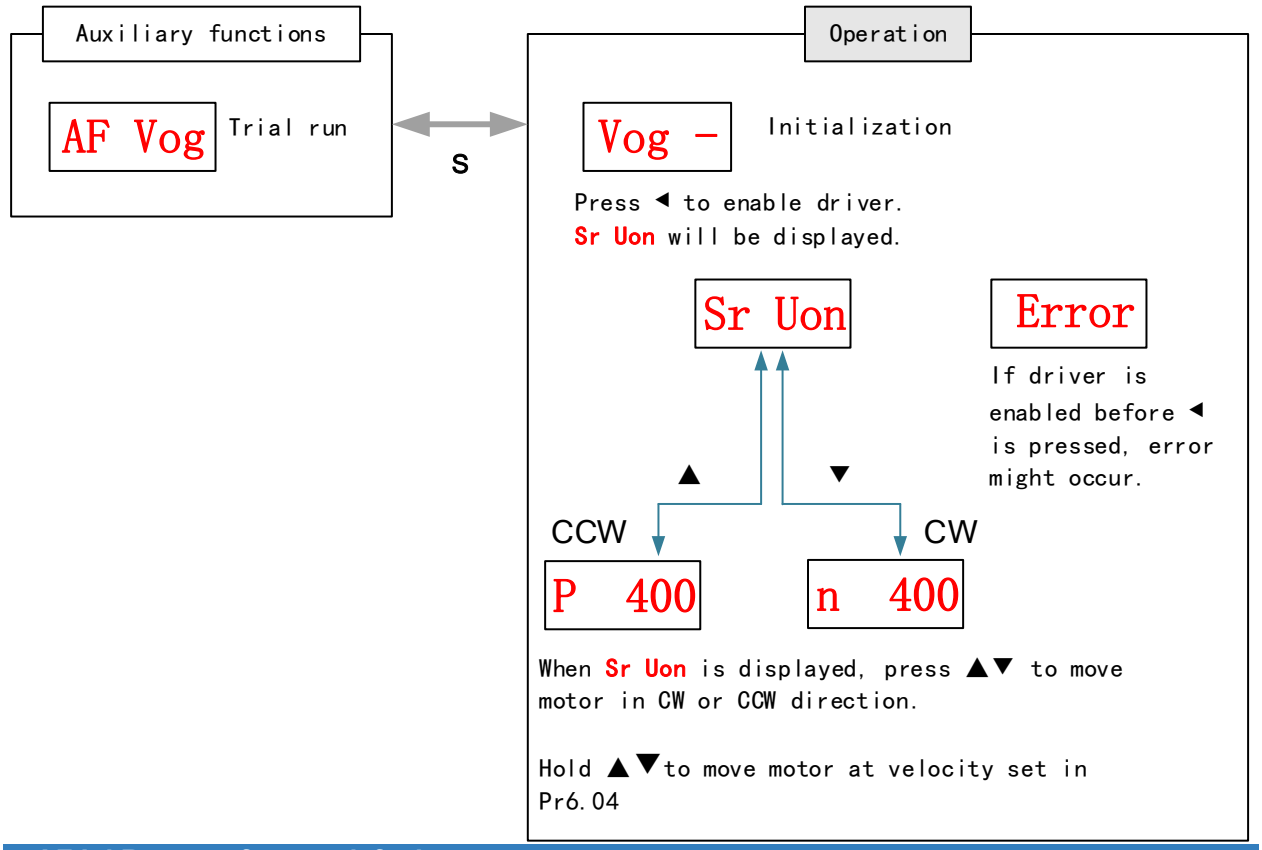

AF InI Reset to factory default

To reset parameters settings to factory default. Can be used to reset parameters using auxiliary function on front panel or using object dictionary.

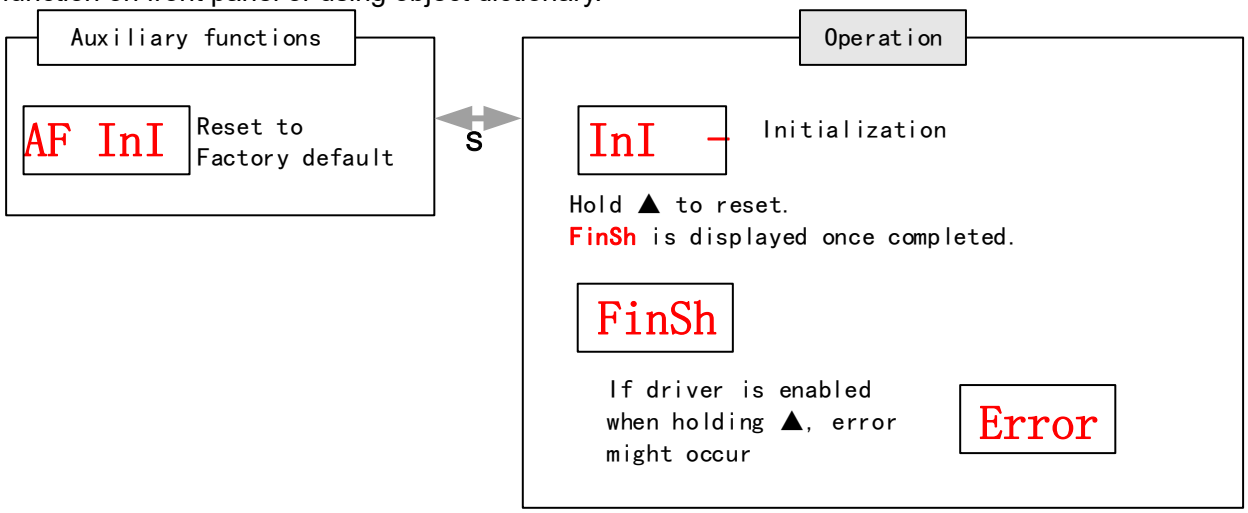

AF unL Front panel unlock

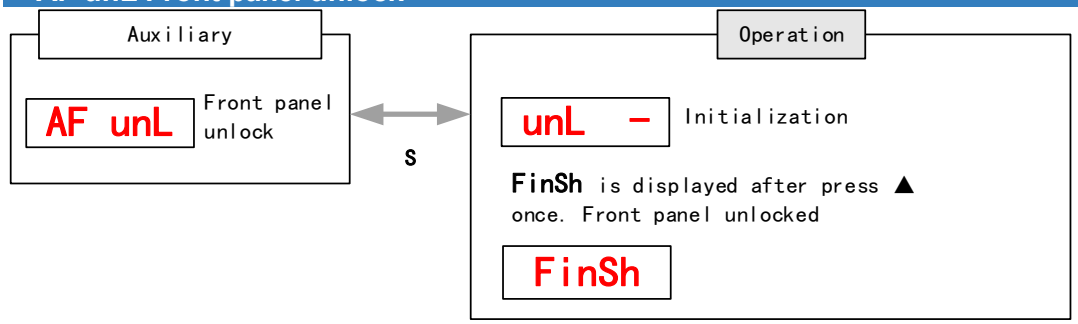

AF ACL Clear alarm

Alarm can be cleared using this auxiliary function but before that, the error needs to be solved and driver needs to be restarted.

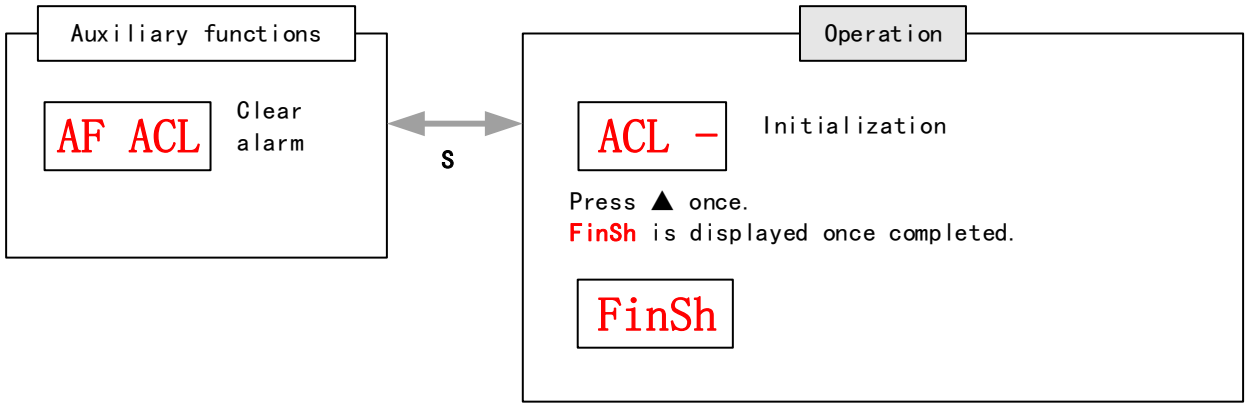

For alarms that can be cleared using this function, please refer to alarm table in Chapter 7.

AF of1 - AF of3 Analog input AI1-3 zero drift correction

Auto adjustment of analog input zero drift settings

Analog input	Parameter (Zero drift settings)
AI1	Pr4.22
AI2	Pr4.25
AI3	Pr4.28

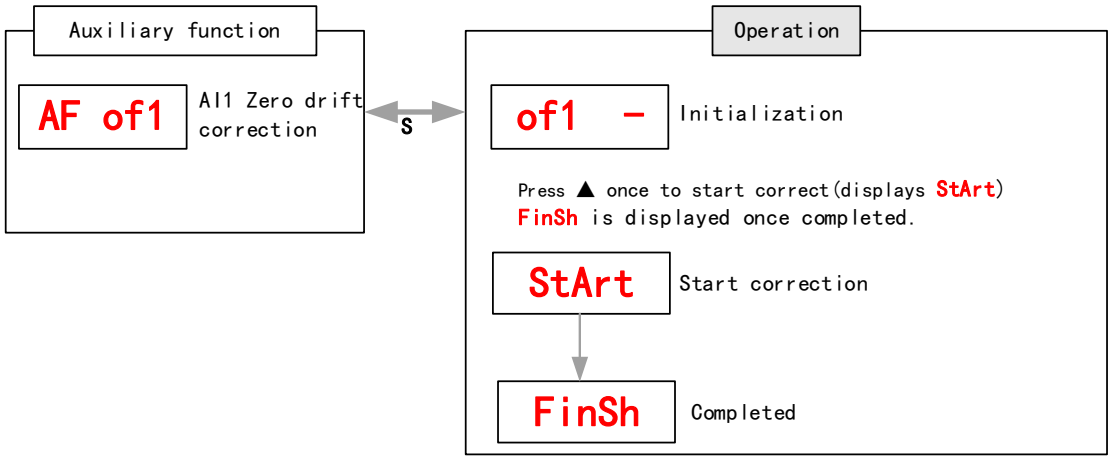

AF Enc Motor angle correction

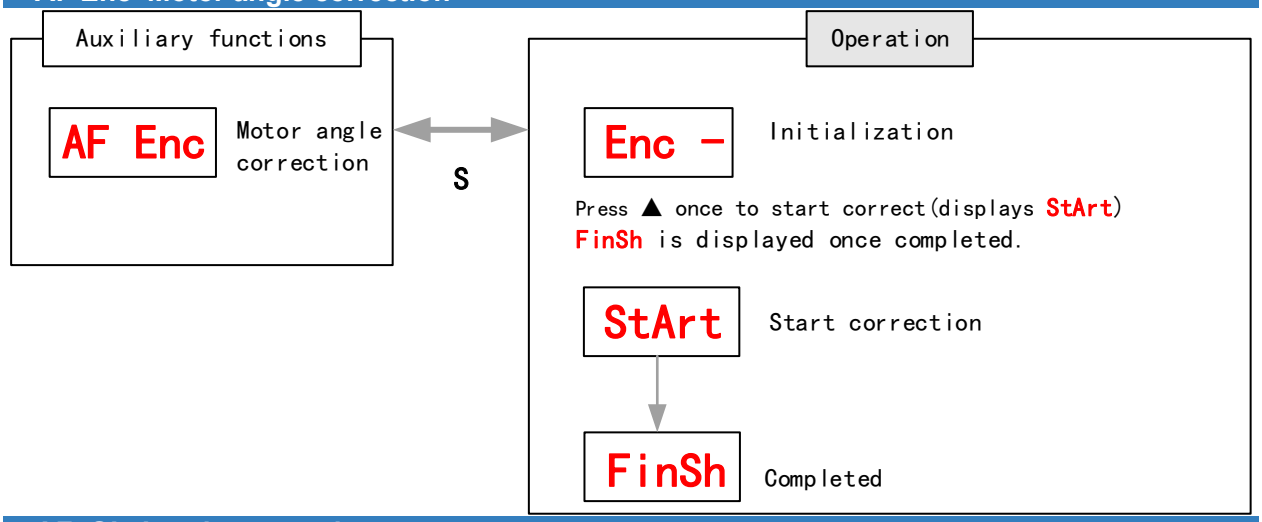

AF_GL Inertia measuring

Please make sure to use suitable velocity and acceleration for the measuring process. Press **S** to exit and disable the driver once completed.

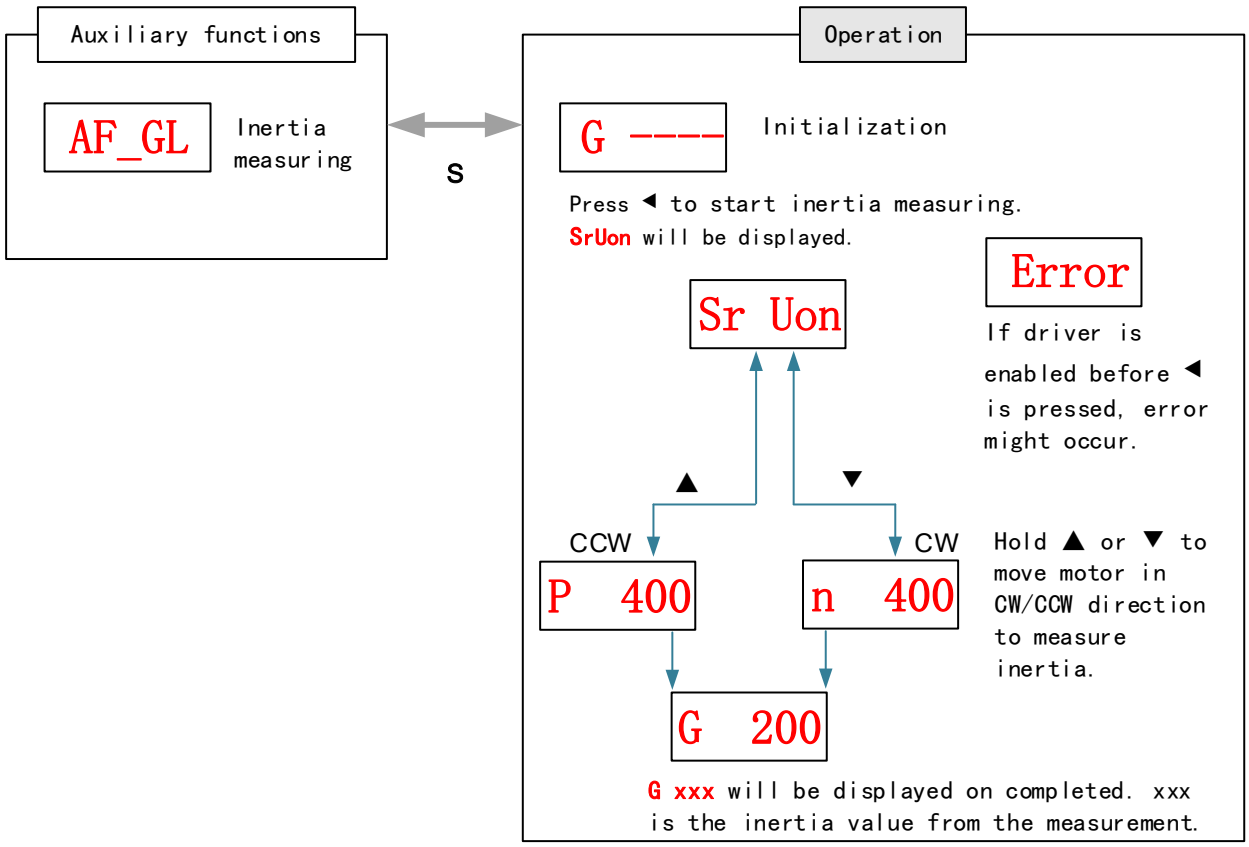

AF rSt Software reset

Software reset is used mainly on parameters modification that takes effect only after driver restart.

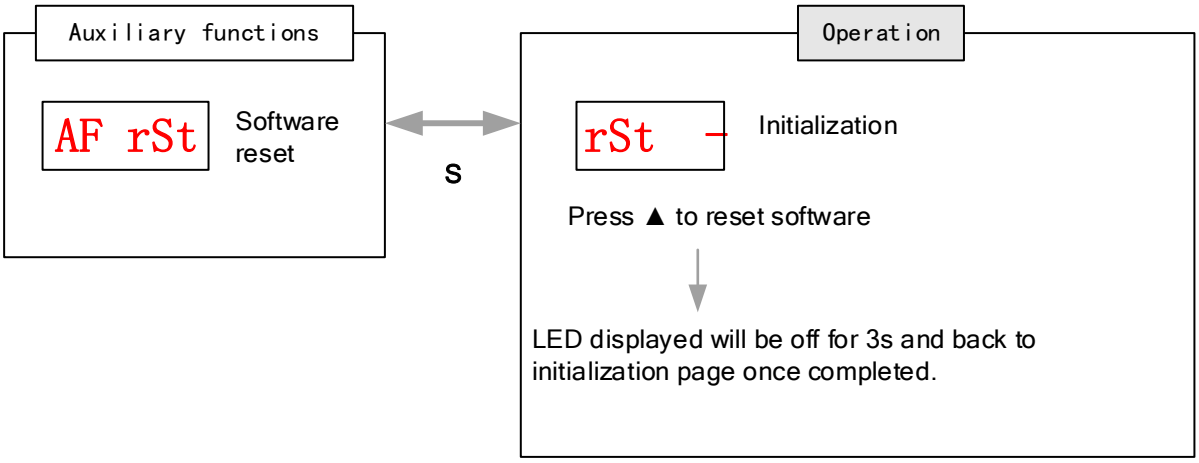

Chapter 5 Application Case

5.1 Gain Adjustment

In order for servo driver to execute commands from master device without delay and to optimize machine performance, gain adjustment has to be done yet.

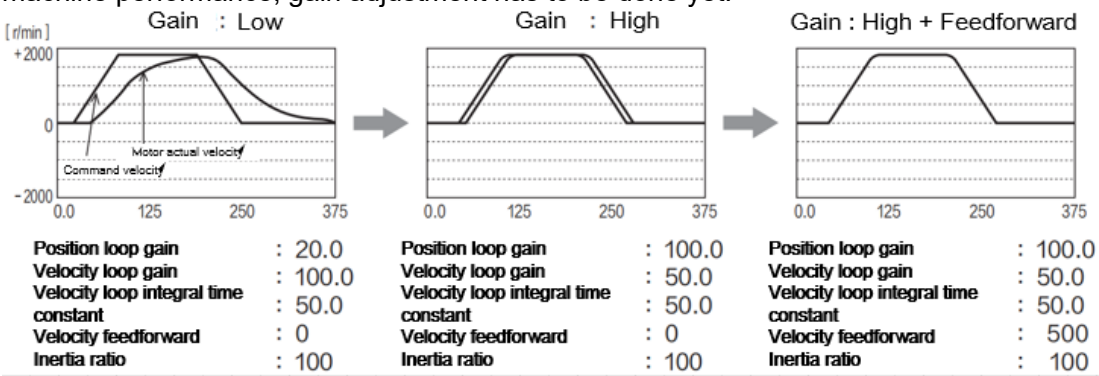

Servo driver gain adjustment is done in combination with a few other parameters (Inertia ratio, Position loop gain, Velocity loop gain and Filters settings). These parameters will have an effect on each other so it always advisable to tune each parameter according in order to achieve optimal machine performance. Please refer to the steps below

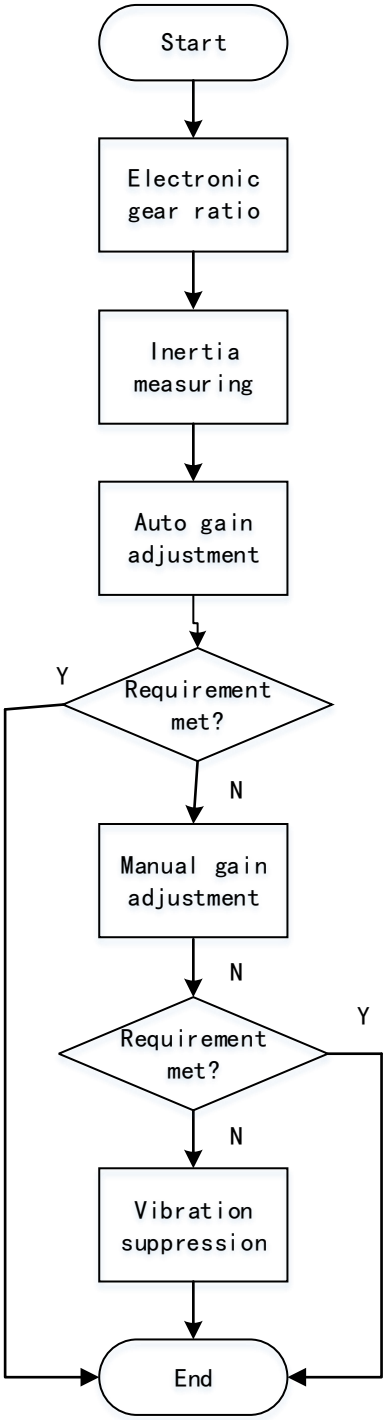

Steps	Functions	Explanation
Inertia measuring	Online	Motor moves with command from controller, servo driver will automatically calculate load-inertia ratio
	Offline	Using servo driver inertia determining function, servo driver can automatically calculate load-inertia ratio

Auto gain adjustment	Auto gain adjustment	Real time determining of mechanical load, gain value is set accordingly.
Manual gain adjustment	Basic gain	On top of auto gain adjustment, manually adjust related parameters so that machine can have better responsiveness and following
	Command pulse filter	Set filter for position, velocity and torque command pulse.
	Gain feedforward	Enable feedforward function to improve following behaviour
Vibration suppression	Mechanical resonance	Using notch filtering function to suppress mechanical resonance.

5.2 Inertia measuring function

Inertia ratio = Total mechanical load rotational inertia / Electronic gear rotational inertia

Inertia ratio is an important parameter. Setting a suitable value can help with the precise tuning of the servo system. Inertia ratio can be set manually and also be determined automatically through servo driver

5.2.1 Online inertia determination

Enable motor using controller. Let motor run at above 400rpm, make sure there are acceleration, constant velocity and deceleration phase during the whole run. Cycle through 2-3 times to calculate load-inertia ratio. Result can be found on the front panel d16 or through Motion Studio system monitoring page. Enter the calculated value into Pr0.04 and save.

5.2.2 Offline inertia determination

Can be achieved through driver front panel or on Motion Studio.
Please make sure: 1. Servo driver is disabled.
2. Axis is within safe and allowed range and limit switch is not triggered to prevent axis from over travelling.

Auxiliary function to determine inertia on front panel

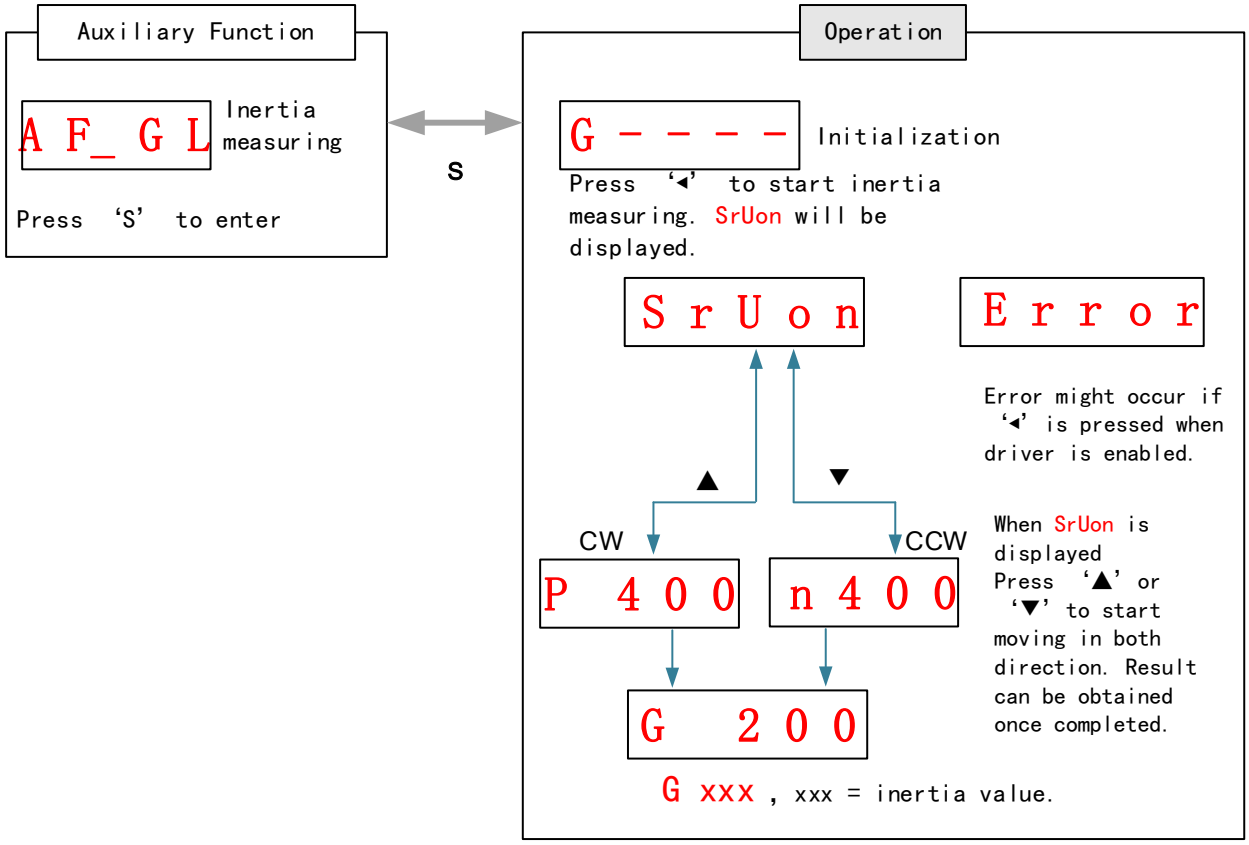

Steps:

1、Set the trial run velocity **Pr6.04**. Value set shouldn't be too large, please keep it at around **400 r/min**.

2、Enter AF_GL for auxiliary function – Inertia ratio determination into front panel

3、Press S once to enter. "G---" will be displayed on the front panel.

4、Press ◀ once to display "StUon"

5、Press ▲ or ▼ once to start to calculate the inertia.

6、After the calculation is done, G **xxx** will be displayed and **xxx** is the value of inertia calculated.

7、Write the corresponding value into Pr0.04. Please refer to for parameter saving on servo driver.

Inertia measuring using Motion Studio

1. Start Motion Studio and maneuver to inertia ratio identification page under performance tuning. Set trial run velocity Pr6.04 and acc-/deceleration time Pr6.25, click on 'Upload' to upload parameters to servo driver.
2. Tick "Prohibit external enabling" and click on "servo on".
3. Click and hold "CCW" to start the motor. Current position will show motor cycles of revolution. Click on POS 1 to save current position as starting point. Click and hold "CW" to start the motor again. Click on POS 2 to save current position as ending point.
4. Set the waiting time between each cycle in Pr6.21 and no. of cycles in Pr6.22. Click on 'Run' and motor will run according to the parameters set.

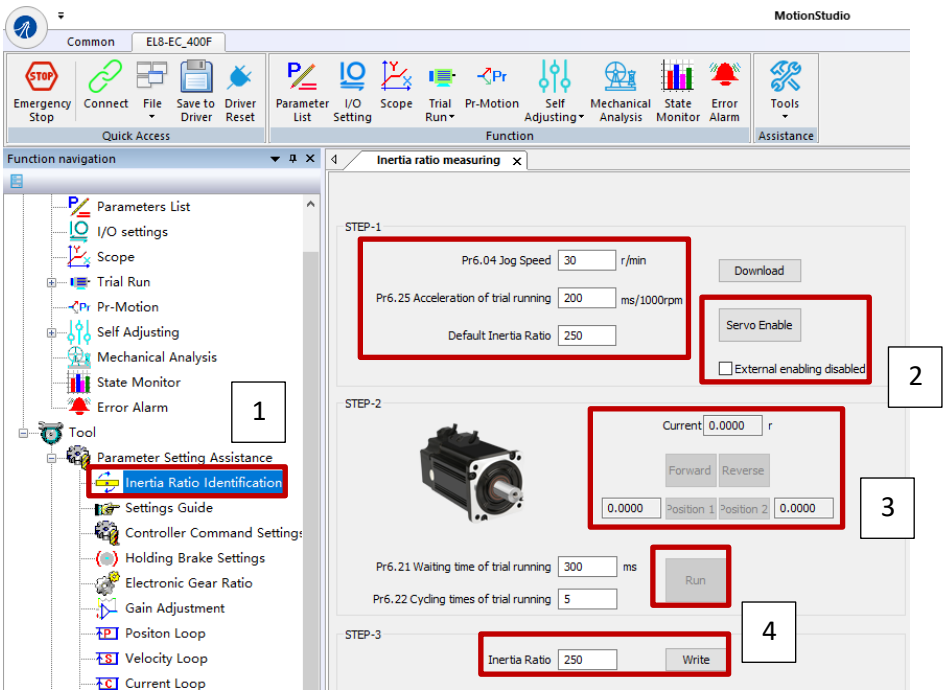

5. After the calculation is done, inertia ratio will be calculated automatically and click on 'write' to enter the calculated value into Pr0.04.

6. Click on “Parameter List” to enter parameters management to check or modify Pr0.04. Then, click on “Save” to save parameters to driver.

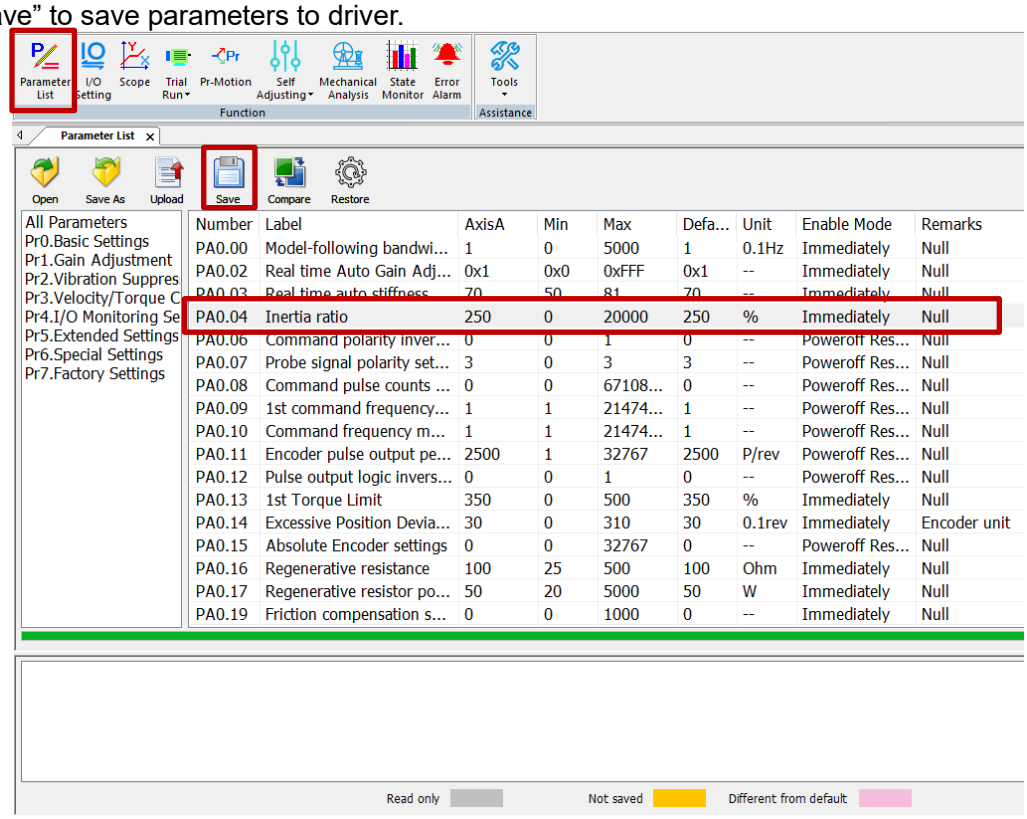

Please take note:

1. Trial run velocity and distance should be optimal to prevent any axis from bumping into objects.

2. It is recommended to move only in 1 direction for vertically mounted axis. Take precaution before moving the axis.

3. For applications with higher frictional drag, please set a minimal travel distance.

Pr0.04	**Label**	Inertia ratio			**Mode**							**F**
	Range	0~10000	**Unit**	%	**Default**	250		**PNU**			1004	

Pr0.04=(load inertia/motor rotational inertia)×100%

Set inertia ratio according to actual load inertia. When both are uniform, actual motor velocity loop responsiveness and gain settings will be consistent. If inertia ratio is greater than actual value, velocity loop gain settings will be higher and vice versa.

For motor with high inertia, Pr0.04 can be left unfilled but optimal setting of Pr0.04 could improve system performance.

5.3 Auto gain adjustment

This function will measure real time mechanical properties and set gain values in accordance to mechanical stiffness. Can be used in any control mode

Conditions to implement	
Control mode	Please refer to Pr0.02 for detailed explanations. Auto gain adjustment is different for each control mode.
Other	・Servo driver needs to be enabled ・Set up input signals such as deviation counter clearing and command input; Torque limit and other motion control parameters to enable motor to move normally without obstacles.

Under certain conditions, external factors might affect automatic gain adjustment functions. If the conditions as listed exist or unfavorable, please disable the automatic gain adjustment function.

Affecting conditions	
Load inertia	・If inertia is less than 3 times or over 20 times of rotor inertia. ・Changes in load inertia
Load	・Very low mechanical stiffness ・If gear backlash is a non-linear property
Motion	・Velocity less than 100r/min or continuously in low velocity mode ・Acc-/deceleration to 2000r/min within 1s. 。 ・Acc-/deceleration torque lower than eccentric load, frictional torque. ・Velocity < 100r/min, acc-/deceleration to 2000r/min within 1s but not longer than 50ms

To enable automatic gain adjustment:

1. Disable the servo driver.
2. Set Pr0.02 = 0x01/0x11 or 0x02/0x12. Then, set Pr0.03
3. Servo enabled. Run motion as normal to start measuring load properties. Related parameters will be automatically set.
4. Increase motor responsiveness by increasing Pr0.03. Please check if there is any vibration before setting Pr0.03 to max. value.
5. Save the parameters.

Please take note:
- Please stop the motor before modifying any parameter. Pr0.02 only takes effect after saving modified parameter values into EEPROM and restarting the driver.
- After enabling the servo driver for the first time or when increasing Pr0.03, mechanical noise or vibration might occur for the first run, it is normal. If it persists, please set Pr0.03 to lower value.

Parameters that change in accordance to real time gain adjustment

No.	Parameters	Label	Remarks
1	Pr1.00	1st position loop gain	When stiffness setting is valid, parameters will be updated to match stiffness value
2	Pr1.01	1st velocity loop gain	
3	Pr1.02	1st velocity integral time	

		constant	
4	Pr1.03	1st velocity detection filter	
5	Pr1.04	1st torque filter	
6	Pr1.05	2nd position loop gain	
7	Pr1.06	2nd velocity loop gain	
8	Pr1.07	2nd velocity integral time constant	
9	Pr1.08	2nd velocity detection filter	
10	Pr1.09	2nd torque filter	

If auto gain adjustment is valid, the parameters listed above can't be manually modified. Only when Pr0.02 = 0x00 or 0x10, can the gain related parameters be modified manually.

Gain related parameters that don't change with the real time gain adjustment

No.	Parameter	Label
1	Pr1.10	Velocity feedforward gain constant
2	Pr1.11	Velocity feedforward filter time constant
3	Pr1.12	Torque feedforward gain
4	Pr1.13	Torque feedforward filter time constant
5	Pr1.15	Position control gain switching mode
6	Pr1.17	Position control switching level
7	Pr1.18	Position control switching hysteresis
18	Pr1.19	Position gain switching time

Pr0.02	Label	Real time Auto Gain Adjusting			Valid Mode							F
	Range	0~1F	Unit	—	Default	2	PNU	1002				

Set up the mode of the real time auto gain adjusting.

Data bits	Category	Settings	Application
0x00_	Motion setting mode	Used to set motion setting mode, which can be selected according to the motion characteristics or setting requirements. Generally, it is recommended to select mode 1 with good generality when there is no special requirement, mode 2 when rapid positioning is needed If mode 1 and mode 2 cannot meet the requirements, please choose mode 0.	
		0:Manual	Pr0.03 invalid. Gain value must be adjusted manually and accordingly.
		1:Standard	Pr0.03 valid. Quick gain adjusting can be achieved by changing Pr0.03 stiffness value. Gain switching is not used in this mode, suitable for applications with requirements for stability.
		2:Positioning	Pr0.03 valid. Quick gain adjusting can be achieved by changing Pr0.03 stiffness value. This mode is suitable for applications requiring quick positioning. Not recommended for load mounted vertical to ground, or please compensate for the load using Pr6.07
0x0_0	Load type setting	Used to select the load type, choose according to load-inertia ratio and mechanical structure.	

		0: Rigid structure	This mode prioritizes system responsiveness. Use this mode when there is a relatively rigid structure with low load inertia. Typical application including directly connected high-precision gearbox, lead screw, gears, etc.
		1:High inertia	For applications with higher load inertia (10 times or above), gain settings take into account both machine stability and responsiveness. Not recommended to set stiffness above 15 for high load inertia.
		2: Flexible structure	This mode prioritizes system stability. Use this mode when there is low rigidity structure with high load inertia. Typical applications included belts and chains.
0x_00	reserved		

The setting type combination is a hexadecimal standard, as follows:

Setting type combination	Application type
0X000	Rigid structure + Manual
0X001	Rigid structure +Standard
0X002	Rigid structure +Positioning
0X010	High inertia + Manual
0X011	High inertia + Standard
0X012	High inertia + Positioning
0X020	Flexible structure + Manual
0X021	Flexible structure +Standard
0X022	Flexible structure +Positioning

Pr0.03	Label	Real time auto stiffness adjusting			Mode							F
	Range	50 ~ 81	Unit	—	Default	70	PNU	1003				

Valid when Pr0.02 = 1,2

Low ⟶ Mechanical stiffness ⟶ High

Low ⟶ Servo gain ⟶ High

81.80 ····· 70.69.68 ····· 51.50

Low ⟶ Responsiveness ⟶ High

Lower values ensure better system responsiveness and mechanical stiffness but machine vibration might occur, please set accordingly.

5.4 Manual gain adjustment

Due to limitation of load conditions, automatic gain adjustment might not achieve expected performance. Control can be improved through manual gain adjustment
The servo system is made up of 3 control loops. From outer to inner: position loop, velocity loop, current loop as shown in the diagram below.

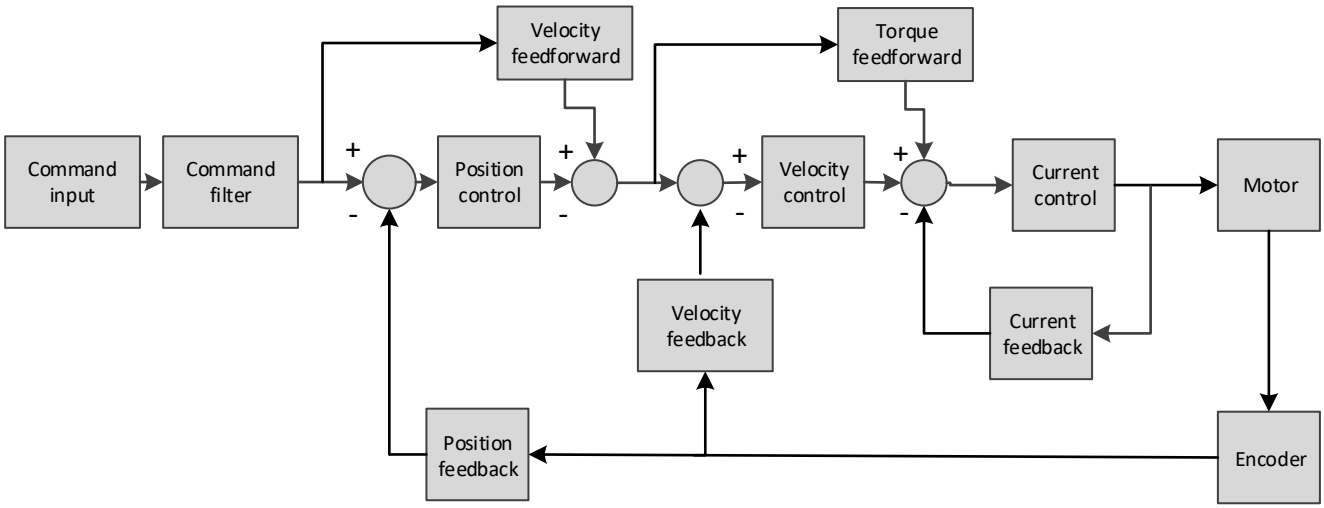

Inner control loop demands higher responsiveness. In order to avoid system instability, please tune in accordance to this principle. Current loop gain usually satisfies the responsiveness demand without tuning. When gain adjustment is done under position control mode, in order to keep the system stabile, position and velocity loop gain have to be increased at the same time to make sure the responsiveness of the position loop is lower than velocity loop.

Steps to tuning (Position and velocity control)

Step	Parameter	Label	Tuning method
1	Pr1.01	Velocity loop gain	Determine if velocity loop is able to follow the changes in velocity command at highest frequency. If Pr0.04 is set correctly, velocity loop highest following frequency = Pr1.01 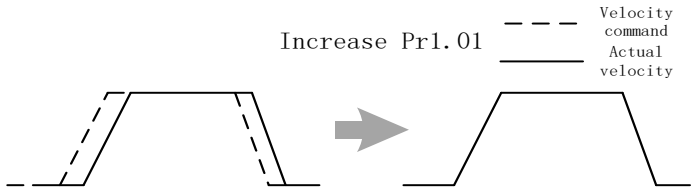 Increase Pr1.01 provided there is no noise or vibration to reduce positioning time, better velocity stability and following. Reduce Pr1.01 if there is mechanical noise. Set up vibration suppression if there is mechanical vibration.

Step	Parameter	Label	Tuning method
2	Pr1.02	Velocity loop integral time constant	To eliminate velocity loop deviation 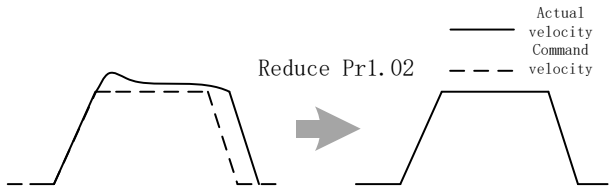 Velocity loop integral time constant (ms) = 4000 / （2*π*Velocity loop gain(Hz)） Reduce Pr1.02 to reduce positioning time. Mechanical vibration might occur if set value is too low; Velocity loop deviation can't be zeroed if set value is too high. Reduce Pr1.02 to increase systemic stiffness, reduce deviation, provided that there is no resonance or noise in the system. If load-inertia ratio is high or resonance exists in mechanical system, increase Pr1.02.
3	Pr1.00	Position loop gain	Determine if position loop is able to follow the changes in position command at highest frequency. Position loop highest following frequency = Pr1.00 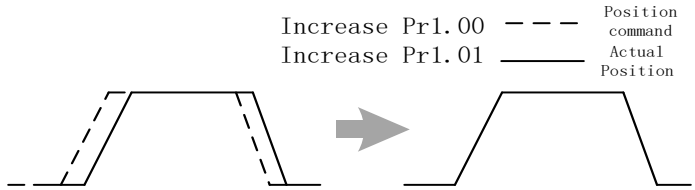 Increase Pr1.00 to reduce position following deviation, reduce positioning time provided that there is no resonance or noise in the system. If Pr1.00 is set too high, it might cause trembling in the mechanical system or positioning overshoot
4	Pr1.04	1st torque filter time constant	Eliminate high frequency noise, suppress mechanical resonance. 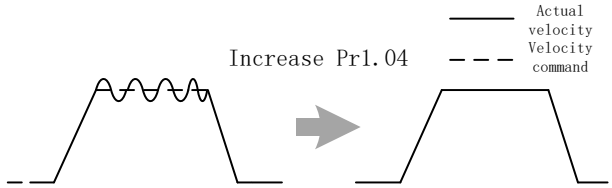 System response improves with lower set value but there is mechanical limitations ; High frequency resonance suppression improves with higher set value but it might cause reduction in response bandwidth and phase margin, resulting in system turbulence. Torque filtering frequency is 4 times higher than velocity loop max following frequency: 1000000/(2π×Pr1.04)≥Pr1.01×4 For example, when Pr1.01=180（0.1 Hz）, Pr1.04 should satisfy： Pr1.01≤221（0.01ms）

1. If vibration occurs with increasing Pr1.01, please modify Pr1.04 to suppress vibration.
2. If the parameters are set too high, it might cause current loop response to reduce.
3. To suppress vibration at stop, increase Pr1.01 and decrease Pr1.04.
4. Decrease Pr1.04 if motor vibrates too much at rest.
5. Pr1.04 cannot be set to overly high value as it might cause control system instability because the torque loop response is much higher than velocity loop.

Example for position and velocity control tuning

For servo gain, if any one of the parameters is changed, please modify other gain related parameters accordingly. Make sure to the change at around 5% and follow the rules as below.

1) Increase responsiveness
   a) Reduce torque command filter time
   b) Increase velocity loop gain
   c) Decrease velocity loop integral time
   d) Increase position loop gain
2) Decrease responsiveness, prevent vibration and over shoot
   a) Reduce position loop gain
   b) Increase velocity loop integral time
   c) Reduce velocity loop gain
   d) Increase torque filter time

5.5 Gain switching

Gain switching function can be triggered internally in servo driver. Only valid under position or velocity control mode. Following effects can be realized by gain switching:

1. Switch to lower gain when motor stops to suppress vibration
2. Switch to higher gain when motor is moving at a low velocity to shorten positioning time
3. Switch to higher gain when motor is moving at a high velocity to improve command following behavior.

Diagram below shows gain switching when motor stops.

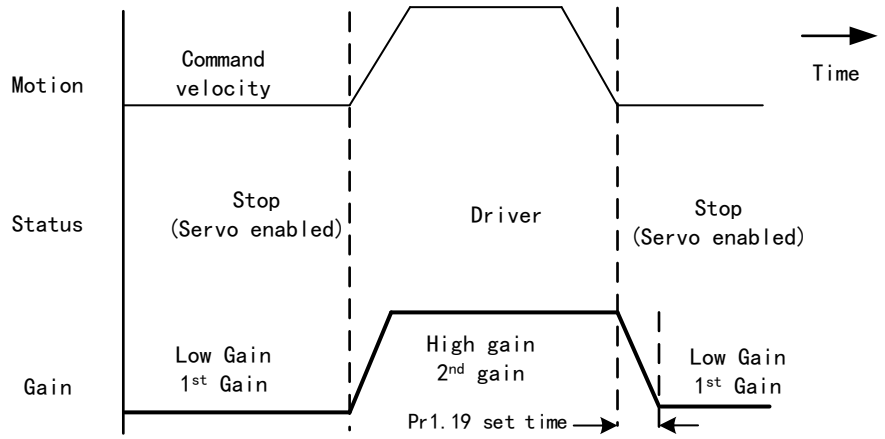

1st gain (Pr1.00-Pr1.04) and 2nd gain (Pr1.05-Pr1.09) switching can be realized through manual and positioning mode. Switching condition is set through Pr1.15. Gain switching is invalid under standard mode.

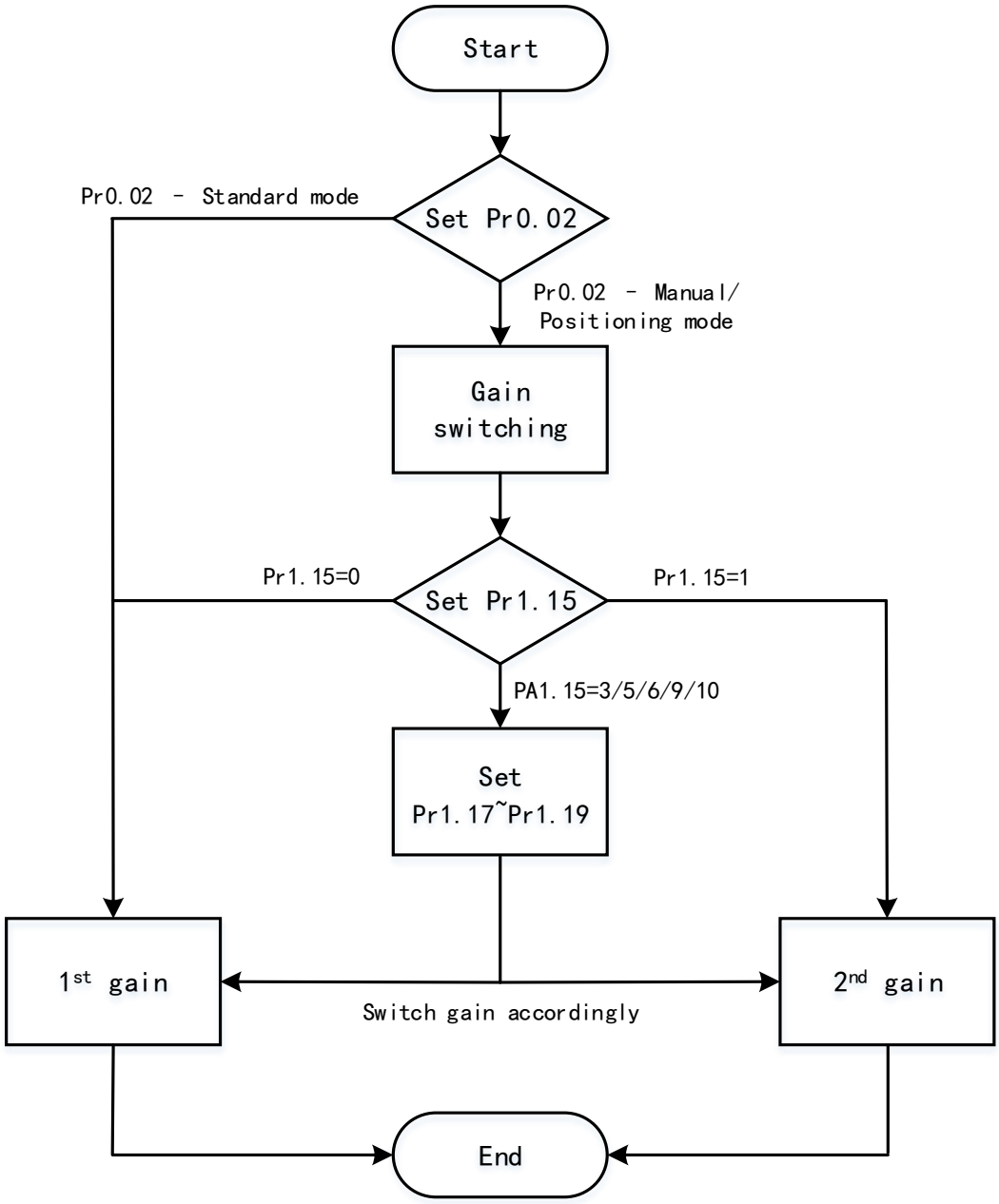

Related parameters on gain switching

No.	Parameter	Label	Remarks
1	Pr1.15	Position control gain switching mode	In position control, set Pr1.15=3、5、6、9、10。 In velocity control, set Pr1.15=3、5、9
2	Pr1.17	Position control level switching	Please set Pr1.17≥Pr1.18
3	Pr1.18	Position control hysteresis switching	If Pr1.17＜Pr1.18, driver will set Pr1.17＝Pr1.18
4	Pr1.19	Position gain time switching	

Pr1.15	Label	Position control gain switching mode			Mode							F
	Range	0~11	Unit	—	Default	0	PNU	2115h				
	Activation	Immediate										

Set Value	Condition	Gain switching condition
0	1st gain fixed	Fixed on using 1st gain(Pr1.00-Pr1.04)
1	2nd gain fixed	Fixed on using 2nd gain (Pr1.05-Pr1.09)
2	Reserved	
3	High set torque	Switch to 2nd gain when set torque command absolute value larger than (level + hysteresis)[%] Switch to 1st gain when set torque command absolute value smaller than (level + hysteresis)[%] 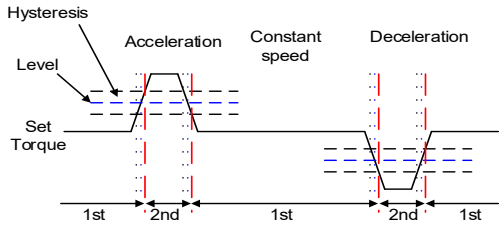
4	Reserved	Reserved
5	High set velocity	Valid for position and velocity control. Switch to 2nd gain when set velocity command absolute value larger than (level + hysteresis)[r/min] Switch to 1st gain when set velocity command absolute value smaller than (level-hysteresis)[r/min]

		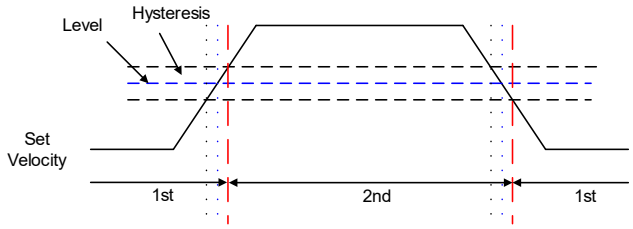
6	Large position deviation	Valid for position control. Switch to 2nd gain when position deviation absolute value larger than (level + hysteresis)[pulse] Switch to 1st gain when position deviation absolute value smaller than (level-hysteresis)[pulse] 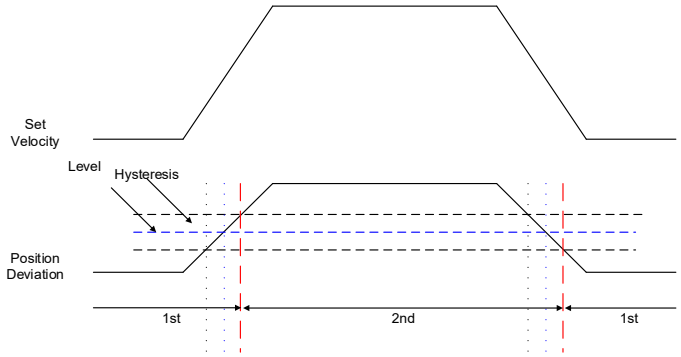
7	Pending position command	Valid for position control. Switch to 2nd gain if position command ≠ 0 Switch to 1st gain if position command remains = 0 throughout the duration of delay time. 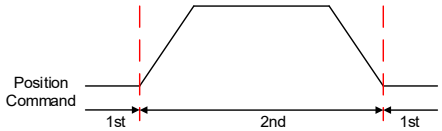
8	Not yet in position	Valid for position control. Switch to 2nd gain if position command is not completed. Switch to 1st gain if position command remains uncompleted throughout the duration of delay time. 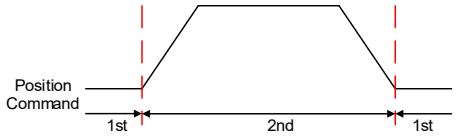
9	High actual velocity	Valid for position control. Switch to 2nd gain when actual velocity absolute value larger than (level + hysteresis)[r/min]

		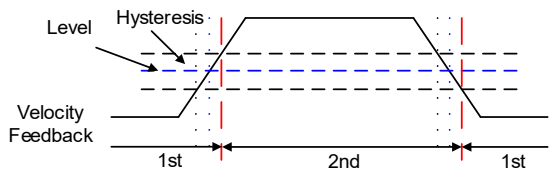 Switch to 1st gain when actual velocity absolute value remains smaller throughout the duration of delay time than (level-hysteresis)[r/min]
10	Pending position command +actual velocity	Valid for position control. Switch to 2nd gain if position command ≠ 0 Switch to 1st gain if positional command = 0 throughout the duration of delay time and absolute value of actual velocity remains smaller than (level - hysteresis) (r/min) 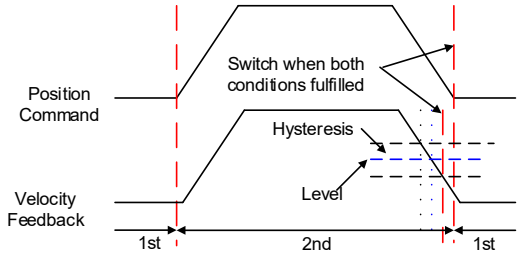

For position control mode, set Pr1.15=3,5,6,9,10;

For velocity control mode, set Pr1.15=3,5,9;

*** Above 'level' and 'hysteresis' are in correspondence to Pr1.17 Position control gain switching level and Pr1.18 Hysteresis at position control switching.*

Pr1.17	**Label**	Position control gain switching level			**Mode**							**F**
	Range	0~20000	**Unit**	Mode dependent	**Default**	50	**PNU**		2017			
	Activation	Immediate										

Set threshold value for gain switching to occur.
Unit is mode dependent.

Switching condition	Unit
Position	Encoder pulse count
Velocity	RPM
Torque	%

Please set level ≥ hysteresis

Pr1.18	Label	Hysteresis at position control switching			Mode							F
	Range	0~20000	Unit	Mode dependent	Default	33		PNU		2118h		
	Activation	Immediate										

To eliminate the instability of gain switching. Used in combination with Pr1.17 using the same unit.

If level< hysteresis, drive will set internally hysteresis = level.

Pr1.19	Label	Position gain switching time			Mode							F
	Range	0~10000	Unit	0.1ms	Default	33		PNU		2019		
	Activation	Immediate										

During position control, if 1st and 2nd gain difference is too large, to ease torque changes and vibration due to rapid changes in position loop gain, set suitable Pr1.19 value
For example: 1st (pr1.00) <-> 2nd (Pr1.05)

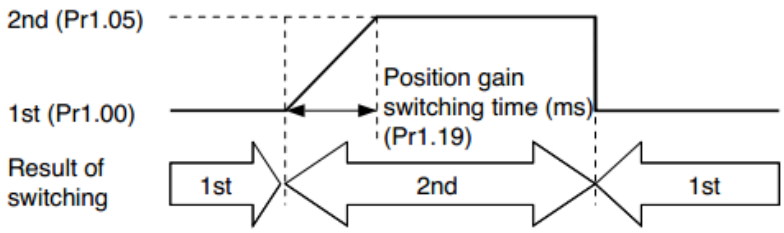

5.6 Feedforward gain

In position control, velocity feedforward is calculated by comparing the velocity control command calculated internally and velocity command calculated from position feedback. Comparing to control only using feedbacks, this will reduce position deviation and increase responsiveness. Besides, by comparing the torque needed during motion from velocity control command in comparison with velocity feedback, torque feedback can be calculated to improve system responsiveness.

5.6.1 Velocity feedforward

Velocity feedforward can be used in position control mode. When the function is enabled, it can increase velocity responsiveness, reduce position deviation during constant velocity.

Velocity feedforward application
Set Pr1.11 to around 50 (0.5ms), then tune Pr1.10 from 0 to bigger values until the velocity feedforward achieves better performance. Under constant velocity, the position deviation in a motion will decrease as the velocity feedforward gain increase.

Pr1.10	Label	Velocity feed forward gain			Mode	**PP**			**HM**	**CSP**		
	Range	0~1000	Unit	0.10%	Default	300	PNU			2110h		
	Activation	Immediate										

Velocity control command according to internal position command processing or through PN communication multiplied by Pr1.10 and add on to velocity command after position command processing

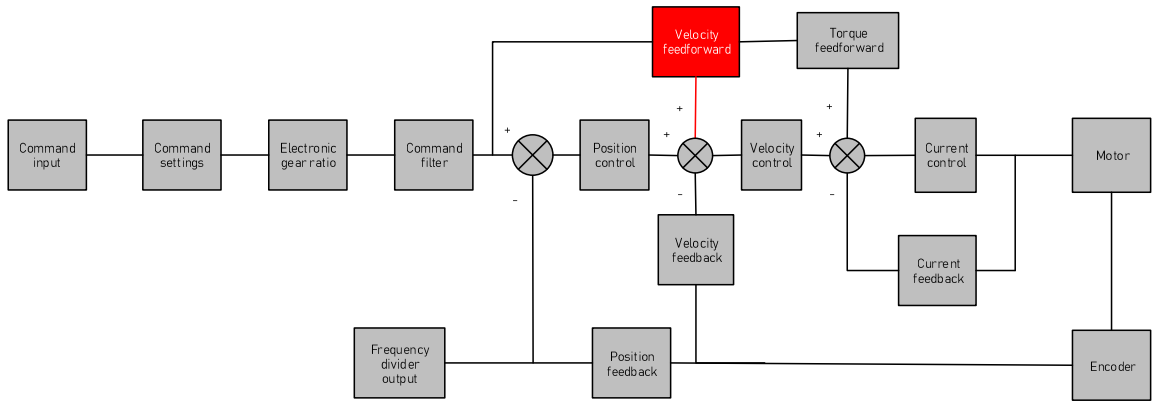

Used for decreasing following error caused by low responsiveness of velocity loop. Might cause overshoot or increase in noise if set value is too high.

Pr1.11	Label	Velocity feed forward filter time constant			Mode							F
	Range	0~6400	Unit	0.01ms	Default	50	PNU		2011			
	Activation	Immediate										

Set velocity feed forward low pass filter to eliminate high or abnormal frequencies in velocity feed forward command. Often used when position command with low resolution or high electronic gear ration to smoothen velocity feed forward.
Position deviation under constant velocity can be lowered with higher velocity feed forward gain. Please to refer to the equation below.

Position deviation[Uint]= $\frac{Set\ velocity[\frac{Uint}{s}]}{Position\ loop\ gain[Hz]} x \frac{100 - Velocity\ feed\ foward\ gain[\%]}{100}$

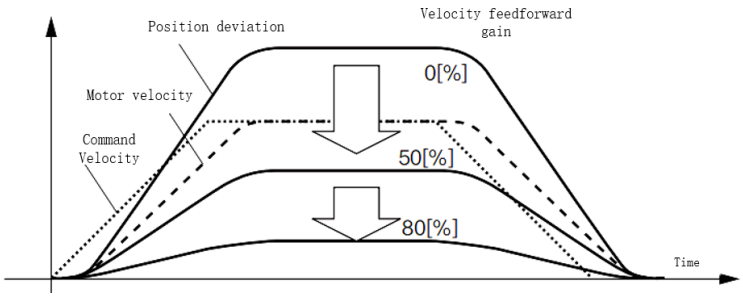

Steps to tuning:

1. Increase Pr1.10 to increase responsiveness but velocity overshoot might occur during acc-/deceleration.
2. By reducing Pr1.11, velocity feedforward would be more effective and vice versa. Pr1.10 and Pr1.11 need to be tuned to a balance.
3. If mechanical noise exists under normal working conditions, please increase Pr1.11 or use position command filter (1 time delay/ FIR smoothing filter)

5.6.2 Torque feedforward

Position control mode: Torque feedforward can increase the responsiveness of torque command, decrease position deviation during constant acc-/deceleration.
Velocity control mode: Torque feedforward can increase the responsiveness of torque command, decrease velocity deviation during constant velocity.

Pr1.12	Label	Torque feed forward gain			Mode							F
	Range	0~1000	Unit	0.1%	Default	0	PNU		2012			
	Activation	Immediate										
	Before using torque feed forward, please set correct inertia ratio Pr0.04. By increasing torque feed forward gain, position deviation on constant acceleration/deceleration can be reduced to close to 0. Under ideal condition and trapezoidal speed profile, position deviation of the whole motion can be reduced to close to 0. In reality, perturbation torque will always exist, hence position deviation can never be 0.											
Pr1.13	Label	Torque feed forward filter time constant			Mode							F

	Range	0~6400	**Unit**	0.01ms	**Default**	0	**PNU**	2013
	Activation	Immediate						
	Low pass filter to eliminate abnormal or high frequencies in torque feed forward command. Usually used when encoder has lower resolution or precision. Noise reduces if torque feed forward filter time constant is set higher but position deviation will increase at acceleration varied points.							

Torque feedforward application

Set Pr1.13 to around 50 (0.5ms), then tune Pr1.10 from 0 to bigger values until torque feedforward achieves better performance. Under constant acc-/deceleration, the position deviation in a motion will decrease as the velocity feedforward gain increase.

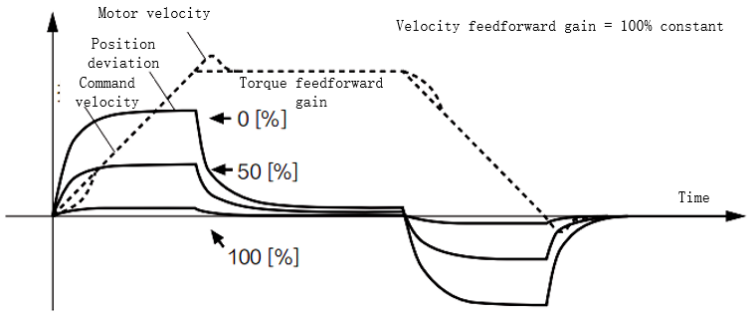

Steps to tuning:

2. Increase Pr1.12 to increase responsiveness but velocity overshoot might occur during acc-/deceleration.
3. By reducing Pr1.13, torque feedforward would be more effective and vice versa. Pr1.12 and Pr1.13 need to be tuned to a balance and reduce noise.

5.7 Model following control

Model following control is a type of closed loop control system. First, an ideal model is constructed and acts as a reference for actual model in a closed loop control. Model following control can be treated as a control mode with 2 flexibilities: Model reference can be used to improve command responsiveness and closed loop control used to increase responsiveness of the system towards interference. They don't affect each other.
Model following control can be used in position loop control to increase responsiveness to commands, reduce positioning time and following error. This function is only available in position control mode.

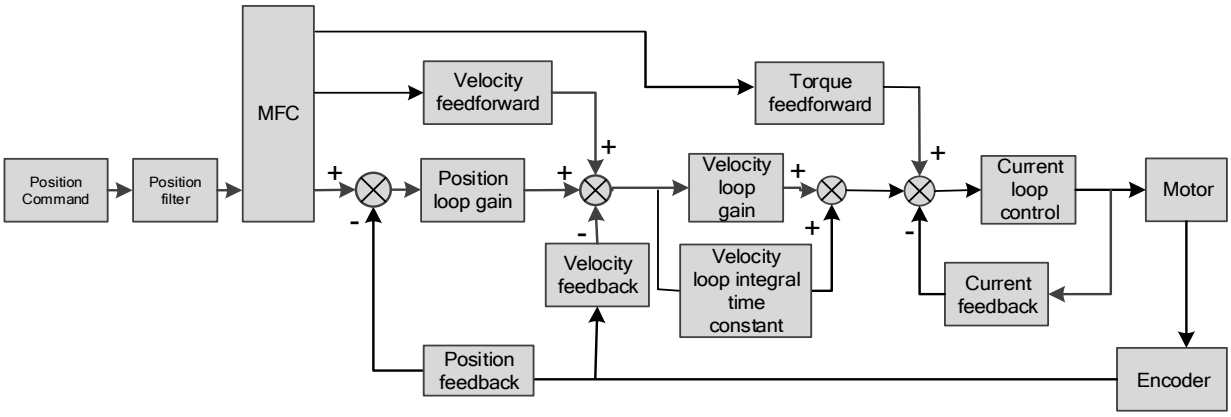

To adjust model following control

1. Automatic adjustment
   Set model following bandwidth Pr0.00 = 1 for automatic adjustment. Now, Pr0.00 = Pr1.01, model following bandwidth is adjusted automatically according to different velocity loop gain.
2. Manual adjustment
   Please used manual adjustment if
   - Automatic adjustment is not satisfactory.
   - Responsiveness needs further improvement in comparison with automatic adjustment.
   - There is a need to set servo gain or model following control parameters manually.

Steps to manually adjust

Step	Content
1	Set up vibration suppression.
2	Set up the right inertia ratio.
3	Manually adjust gain.
4	Increase Pr0.00 provided that there is no overshoot and vibration. Usually Pr0.00 ≥ Pr1.01 is recommended.

Model following bandwidth determines the responsiveness of the servo system. Increase the value set will increase responsiveness and reduce positioning time. Overshoot can be prevented if it is set at a lower value but responsiveness will be lowered. Model following bandwidth shouldn't be too large for mechanical structure with lower stiffness, excessive position deviation alarm might occur under high velocity.

5.8 Friction compensation function

This function is to compensation for changes in load to reduce the effect of friction in motion. The compensation value is directional.

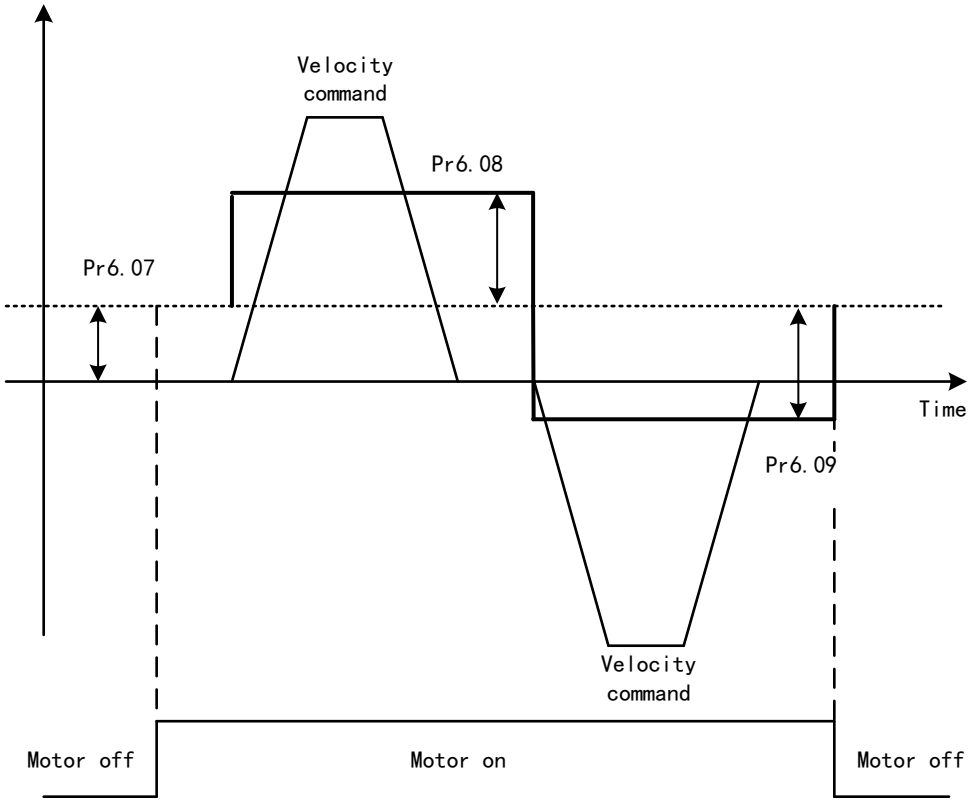

Vertically loaded axis: A constant eccentric load torque is applied on the motor. By adjusting Pr6.07, positioning deviation due to different motional direction can be reduced.
Belt-driven axis: Due to large radial load with dynamic frictional torque. Positioning time delay and deviation can be reduced by adjusting Pr6.08 and Pr6.09.

Pr6.07	**Label**	Torque command additional value			**Mode**							**F**
	Range	-100~100	**Unit**	%	**Default**	0		**PNU**		7007		
	Activation	Immediate										
	To set torque forward feed additional value of vertical axis. Applicable for loaded vertical axis, compensate constant torque. Application: When load move along vertical axis, pick any point from the whole motion and stop the load at that particular point with motor enabled but not rotating. Record output torque value from d04, use that value as torque command additional value (compensation value)											
Pr6.08	**Label**	Positive direction torque compensation value			**Mode**							**F**
	Range	-100~100	**Unit**	%	**Default**	0		**PNU**		7008		
	Activation	Immediate										

Pr6.09	Label	Negative direction torque compensation value			Mode							F
	Range	-100~100	Unit	%	Default	0	PNU		7009			
	Activation	Immediate										

To reduce the effect of mechanical friction in the movement(s) of the axis. Compensation values can be set according to needs for both rotational directions.

Applications:
1. When motor is at constant speed, d04 will deliver torque values.
Torque value in positive direction = T1;
Torque value in negative direction = T2

Pr6.08/Pr6.09 = $T_f = \frac{|T1 - T2|}{2}$

5.9 Safety Functions

5.9.1 Torque limiting function

Pr5.21	Label	Torque limit selection			Mode							F
	Range	0~2	Unit	—	Default	2	PNU		6021			
	Activation	Immediate										

Set value	Positive limit value	Negative limit value
0	Pr0.13	Pr0.13
1	Pr0.13	Pr5.22
2	Negative or positive torque limit is controlled by Telegram 750. [Min. absolute value of either positive or negative limit value will be applied]	

Pr0.13	Label	1st Torque Limit			Mode							F
	Range	0~500	Unit	%	Default	300	PNU		1013			
	Activation	Immediate										

1st torque limit is set according to ratio percentage of motor rated current. Do not exceed max driver output current.
Actual torque limit is the smaller value of Pr0.13 and object dictionary 6072

Pr5.22	Label	2nd torque limit			Mode							F
	Range	0~500	Unit	%	Default	300	PNU		6022			
	Activation	Immediate										

Limited by motor max. torque.

5.9.2 External brake deactivation output signal BRK-OFF

Please refer to Pr4.15 to set up the I/O output function parameters. When enabled and timing conditions in Pr4.39 and Pr6.14 are fulfilled, the set I/O output will deliver ON signal.

The relation between SRV-ON and Pr4.37/Pr4.38:

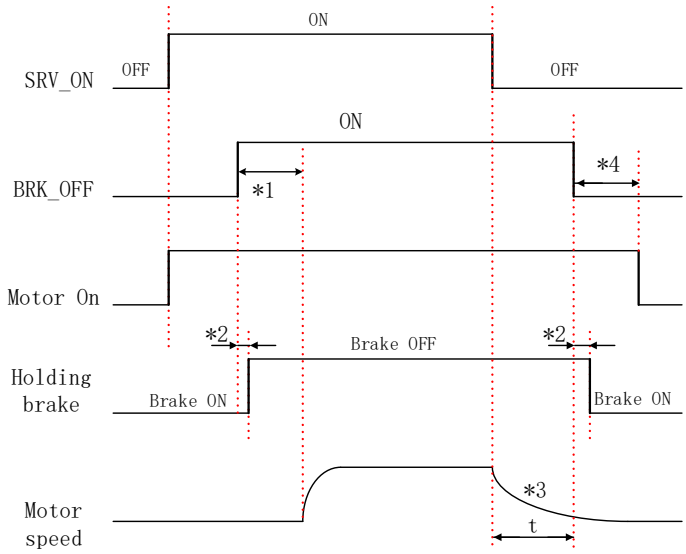

*1: Duration time set in Pr4.38

*2: Delay time between output of BRK-OFF signal until actual braking motion.

*3: Deceleration time t is determined by the shorter of the time set in Pr6.14 or time used for motor speed to reduce to speed set in Pr4.39. Whichever the shortest.

*4: Duration time set in Pr4.37

Pr4.37	**Label**	Motor power-off delay time			**Mode**							**F**
	Range	0~3000	**Unit**	1ms	**Default**	100	**PNU**		5037			
	Activation	Immediate										
To set delay time for holding brake to be activated after motor power off to prevent axis from sliding.												
Pr4.38	**Label**	Delay time for holding brake release			**Mode**							**F**
	Range	0~3000	**Unit**	1ms	**Default**	0	**PNU**		5038			
	Activation	Immediate										
To set delay time for holding brake to be released after motor power on. Motor will remain at current position and input command is masked to allow holding brake to be fully released before motor is set in motion.												

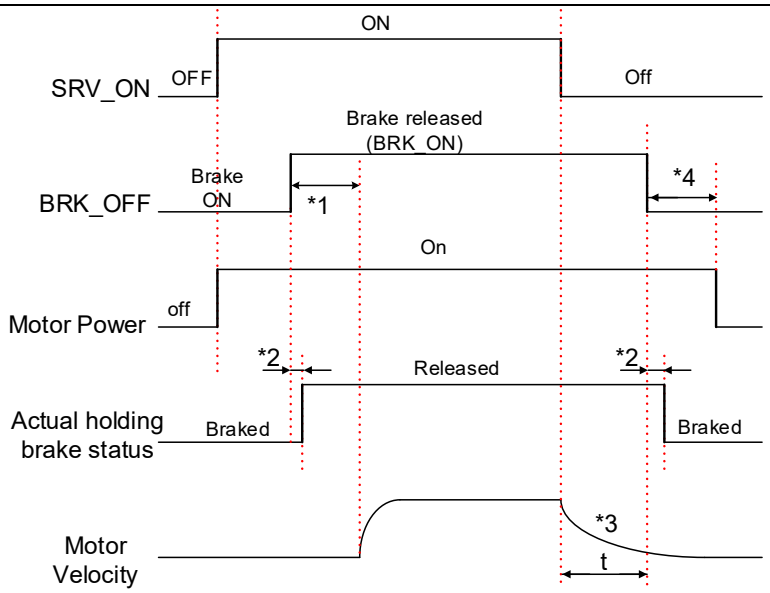

*1: Delay time set in Pr4.38
*2: Delay time from the moment BRK_OFF signal is given until actual holding brake is released or BRK_ON signal is given until actual holding brake is activated. It is dependent on the holding brake of the motor.
*3: Deceleration time is determined by Pr6.14 or if motor speed goes below Pr4.39, whichever comes first. BRK_OFF given after deceleration time.
*4: Pr4.37 set time value.

Delay time from the moment SRV_ON is given until BRK_OFF switch to BRK_ON, is less than 500ms.

Pr4.39	Label	Holding brake activation speed			Mode							F
	Range	30~3000	Unit	RPM	Default	30	PNU		5039			
	Activation	Immediate										

To set the activation speed for which holding brake will be activated.

When SRV-OFF signal is given, motor decelerates, after it reaches below Pr4.39 and Pr6.14 is not yet reached, BRK_OFF is given.
BRK_OFF signal is determined by Pr6.14 or if motor speed goes below Pr4.39, whichever comes first.

Application:
1. After disabling axis, Pr6.14 has been reached but motor speed is still above Pr4.39, BRK_OFF signal given.
2. After disabling axis, Pr6.14 has not been reached but motor speed is below Pr4.39, BRK_OFF signal given.

5.9.3 Emergency stop function

Emergency stop is used when an alarm occurs or a servo prohibition signal is received when servo driver is enabled.

Set up Pr4.43 to enable the function

Pr4.43	**Label**	Emergency stop function			**Mode**								F
	Range	0~1	**Unit**	-	**Default**	0	**PNU**		5043				
	Activation	Immediate											
	0：Emergency stop is valid, servo driver will be forced to STOP and alarm occurs. 1：Emergency stop is invalid, servo driver will not be forced to STOP.												

5.10 Vibration Suppression

Mechanical system has certain resonance frequencies. When servo gain is increased, resonance might occur at around mechanical resonant frequencies, preventing gain value from increasing. In such situation, notch filter can be used to suppress resonance to set higher gains or lower vibration.
To suppress mechanical resonance:

1. Torque command filter time constant
   Set filter time constant to reduce gain at around resonant frequencies
   Torque command filter blocked frequencies（Hz） fc=1/ [2π×PA1.04(0.01ms)×0.00001）]
2. Notch filter
   Notch filter suppress mechanical resonance by reducing gain at certain frequencies. When notch filter is correctly set, resonance can be suppressed and servo gain can be increased.

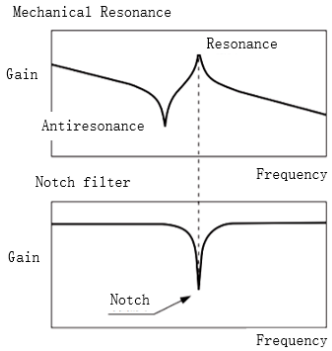

- Notch filter bandwidth
  Center frequency of the notch filter, frequency bandwidth with reduction of -3dB.
- Notch filter depth
  The ratio between input and output of center frequency.
  When depth = 0, center frequency output is totally off and when depth = 100,
  Hence when notch filter depth is set at lower value, the depth is higher and better at suppressing mechanical resonance but it might cause system instability.

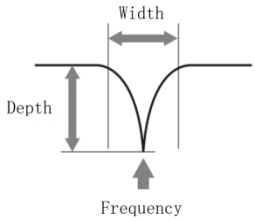

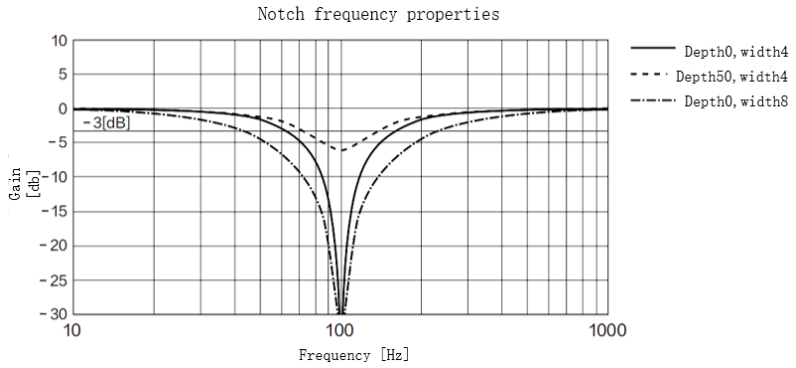

If analytic result from mechanical properties analysis tool doesn't show any obvious peak but vibration did occur, it might not be due to mechanical resonance, it may be that servo gain has reached its limit. This kind of vibration can't be suppressed by using notch filter, only by reducing gain and torque command filter time.

To use notch filter

Automatic notch filter

1. Set Pr2.00 = 1 for auto notch filter adjustment
2. If Pr0.03 stiffness increases, 3rd group of notch filter (Pr2.07/Pr2.08/Pr2.09) updates automatically when driver is enabled. Pr2.00 = 0, auto adjustments stop.
   If resonance is suppressed, it means self-adjusting notch filter is working. If resonance occurs when mechanical stiffness increases, please use manual notch filter, set filter frequency to actual resonant frequency.

Manual notch filter

There are 2 ways to use manual notch filter.

1. After enabling self-adjusting notch filter, set the values from 3rd group of filters to 1st group of notch filter (Pr2.01/Pr2.02/Pr2.03), see if resonance is suppressed. If there is other resonance, set Pr2.00 = 1, then set the values from 3rd group of filters to 2nd group of notch filter (Pr2.04/Pr2.05/Pr2.06)
2. Get resonant frequency, notch filter bandwidth and depth and set it into the corresponding parameters through Motion Studio.

Pr2.00	Label	Adaptive filtering mode settings			Mode							F
	Range	0~4	Unit	-	Default	0	PNU		3000			
	Activation	Immediate										

Set value	Explanation	
0	Adaptive filter: invalid	Parameters related to 3rd and 4th notch filter remain unchanged
1	Adaptive filter: 1 filter valid for once.	1 adaptive filter becomes valid. 3rd notch filter related parameters updated accordingly. Pr2.00 switches automatically to 0 once updated.
2	Adaptive filter: 1 filter remains valid	1 adaptive filter becomes valid. 3rd notch filter related parameters will keep updating accordingly.
3-4	Reserved	-

Pr2.01	Label	1st notch frequency			Mode							F
	Range	50~4000	Unit	Hz	Default	4000	PNU		3001			
	Activation	Immediate										
	Set center frequency of 1st torque command notch filter. Set Pr2.01 to 4000 to deactivate notch filter											

Pr2.02	Label	1st notch bandwidth selection			Mode							F
	Range	0~20	Unit	-	Default	4	PNU		3002			
	Activation	Immediate										
	Set notch bandwidth for 1st resonant notch filter. Under normal circumstances, please use factory default settings. If resonance is under control, in combination with Pr2.01 and Pr2.03, Pr2.02 can be reduced to improve current loop responsiveness which allows higher mechanical stiffness settings.											

Pr2.03	Label	1st notch depth selection			Mode							F
	Range	0~99	Unit	-	Default	0	PNU		3003			
	Activation	Immediate										
	Set notch depth for 1st resonant notch filter. Under normal circumstances, please use factory default settings. If resonance is under control, in combination with Pr2.01 and Pr2.02, Pr2.03 can be reduced to improve current loop responsiveness which allows higher mechanical stiffness settings.											

Pr2.04	Label	2nd notch frequency			Mode							F
	Range	50~4000	Unit	Hz	Default	4000	PNU		3004			
	Activation	Immediate										
	Set center frequency of 2nd torque command notch filter. Set Pr2.04 to 4000 to deactivate notch filter											

Pr2.05	Label	2nd notch bandwidth selection			Mode							F
	Range	0~20	Unit	-	Default	4	PNU		3005			
	Activation	Immediate										
	Set notch bandwidth for 2nd resonant notch filter. Under normal circumstances, please use factory default settings. If resonance is under control, in combination with Pr2.04 and Pr2.06, Pr2.05 can be reduced to improve current loop responsiveness which allows higher mechanical stiffness settings.											

Pr2.06	Label	2nd notch depth selection			Mode							F
	Range	0~99	Unit	-	Default	0	PNU	3006				
	Activation	Immediate										

Set notch depth for 1st resonant notch filter.
When Pr2.06 value is higher, notch depth becomes shallow, phase lag reduces. Under normal circumstances, please use factory default settings. If resonance is under control, in combination with Pr2.04 and Pr2.05, Pr2.06 can be reduced to improve current loop responsiveness which allows higher mechanical stiffness settings.

Pr2.07	Label	3rd notch frequency			Mode							F
	Range	50~4000	Unit	Hz	Default	4000	PNU	3007				
	Activation	Immediate										

Set center frequency of 3rd torque command notch filter.
Set Pr2.07 to 4000 to deactivate notch filter

Pr2.08	Label	3rd notch bandwidth selection			Mode							F
	Range	0~20	Unit	-	Default	4	PNU	3008				
	Activation	Immediate										

Set notch bandwidth for 3rd resonant notch filter.
Under normal circumstances, please use factory default settings.

Pr2.09	Label	3rd notch depth selection			Mode							F
	Range	0~99	Unit	-	Default	0	PNU	3009				
	Activation	Immediate										

Set notch depth for 3rd resonant notch filter.
When Pr2.09 value is higher, notch depth becomes shallow, phase lag reduces.

5.11 End vibration suppression

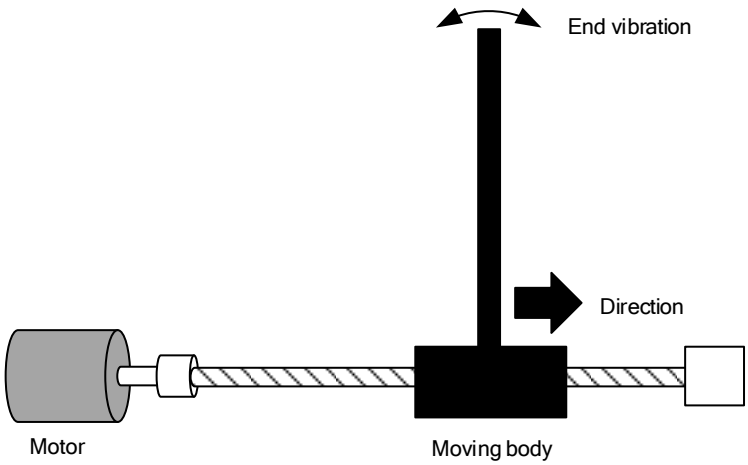

If the mechanical has an end that is long and heavy, it might cause end vibration at emergency stop and affect the positioning. Usually happens on long armed axis with loose end. The frequency is usually within 100Hz which is lower than mechanical resonant frequencies. It is called low-frequency resonance which can be prevented by applying low frequency suppression function.

To apply low frequency suppression

1. Trace current/ position deviation waveform when motion stops.
2. Measure the vibration cycle T1 of current waveform.
3. Convert T1 into low frequency resonance by F1 = 1/T1
4. Write F1 into Pr2.14
5. If some other low frequency resonance occurs, please repeat step 1-3 and write F2 into Pr2.16.

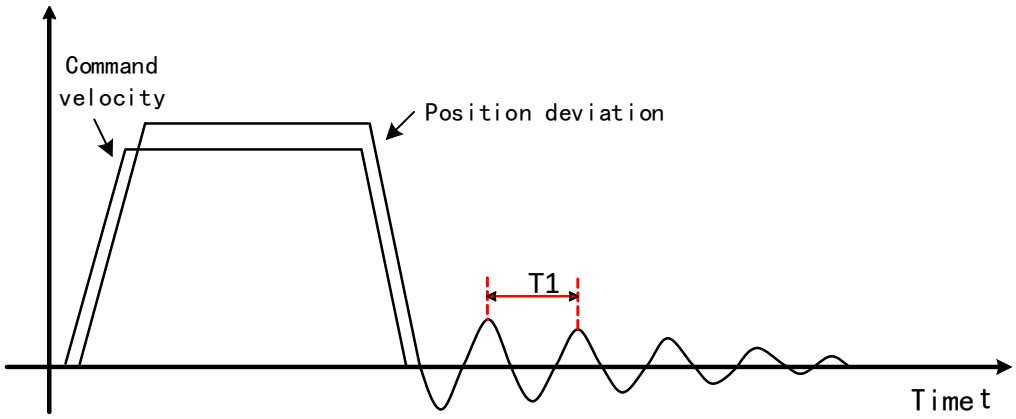

The result of suppressing low frequency resonance

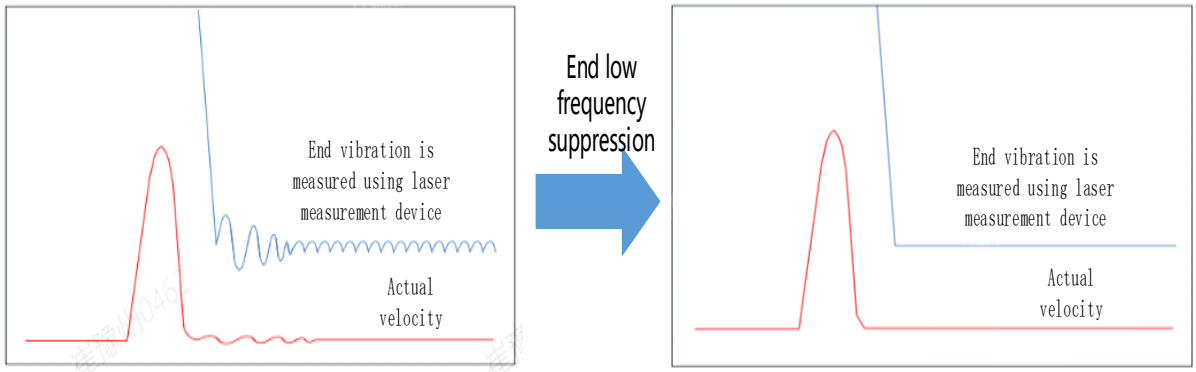

Pr2.14	**Label**	1st damping frequency			**Mode**							**F**
	Range	0~2000	**Unit**	0.1Hz	**Default**	0		**PNU**		3014		
	Activation	Immediate										
	0: Deactivate To suppress wobble at load end. Often used when wobble of flexible structure due to high deceleration upon stopping. Especially effective for wobble with frequencies under 100Hz. Set Pr2.15 to wobble frequency (wobble frequency can be determined using tracing function of Motion Studio)											

Pr2.16	**Label**	2nd damping frequency			**Mode**							**F**
	Range	0~2000	**Unit**	0.1Hz	**Default**	0		**PNU**		3016		
	Activation	Immediate										
	0: Deactivate To suppress wobble at load end. Often used when wobble of flexible structure due to high deceleration upon stopping. Especially effective for wobble with frequencies under 100Hz. Set Pr2.16 to wobble frequency (wobble frequency can be determined using tracing function of Motion Studio)											

5.12 Mechanical properties analysis

To determine mechanical and set up notch filter parameters to suppress vibration caused by resonance.

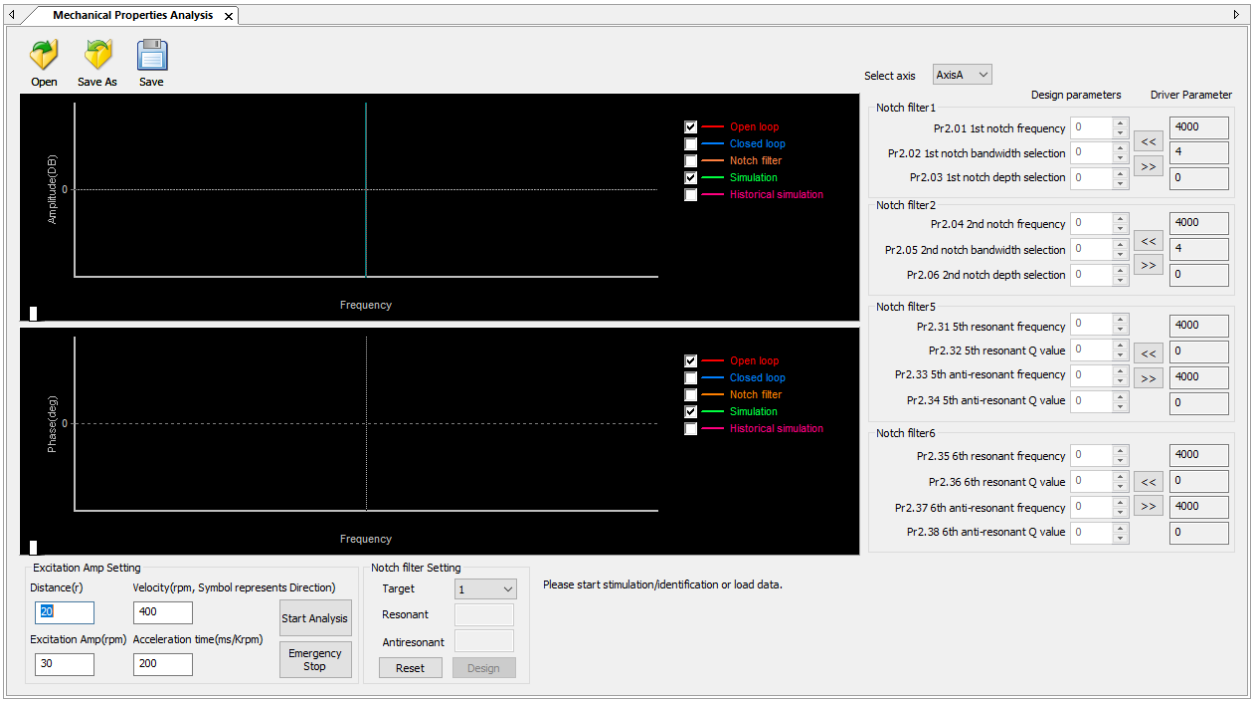

To avoid strong vibration, please first set lower excitation amplitude. However, if the set value is too low, data waveform will include some degree of distortion.

If vibration occurs during tests which can't be reduce through lowering electrical current excitation, it might be due to excessive gain. Please lower velocity gain and set notch filter as accordance from the mechanical properties analysis. Or might be due to inertia settings (Pr0.04) is too large, please use optimal inertia ratio value.

5.13 Multiturn absolute encoder

Multiturn absolute encoder records the position and the revolution counts of the motor. When driver is powered-off, multiturn absolute encoder will backed up the data using battery and after powering on, the data will be used to calculated absolute mechanical position and there is no need for a mechanical homing process. Use widely in robotic arms and CNC machines.

If it is the first time using the encoder, please home the mechanical axis and initialize the absolute position of the encoder to zero. Set up a homing point and only home when there is an alarm. Please stop the axis before reading any position data to prevent inaccuracy.

Parameters setting

Pr0.15	**Label**	Absolute Encoder settings			**Mode**							**F**
	Range	0~32767	**Unit**	-	**Default**	0	**PNU**		1015			
	Activation	Immediate										

0: Incremental mode:
Used as an incremental encoder. Doesn't retain position data on power off. Unlimited travel distance.

1: Multiturn linear mode:
Used as a multiturn absolute encoder. Retrain position data on power off. For applications with fixed travel distance and no multiturn data overflow.

2: Multiturn rotary mode:
Used as a multiturn absolute encoder. Retrain position data on power off. Actual data feedback in between 0-(Pr6.63). Unlimited travel distance.

3: Single turn absolute mode:
Used when travel distance is within 1 revolution of the encoder. Data overflow will trigger alarm.

5: Clear multiturn alarm and activate multiturn absolute function. Will switch to multiturn mode once alarm cleared, if remains at 5 after 3s, please solve according to Er153.

9: Clear multiturn position, reset multiturn alarm and activate multiturn absolute function. Will switch to multiturn mode once alarm cleared, if remains at 9 after 3s, please solve according to Er153. Please disable axis before setting to 9 and home the axis before using.

Read absolute position

1、Steps：

1) First, select a motor with multiturn absolute encoder, install battery and confirm whether the driver version supports the specific motor;

2) Set Pr0.15 = 1. If it is the first time of installation, Err153 will occur because battery is newly installed and position data is invalid. Please home the axis and initialize the absolute position of the encoder to zero.

3) When absolute homing point is set and there is no fault with the battery, the alarm will be cleared

4) Finally, the user can read the absolute position. Position won't be lost even if the driver is powered off.

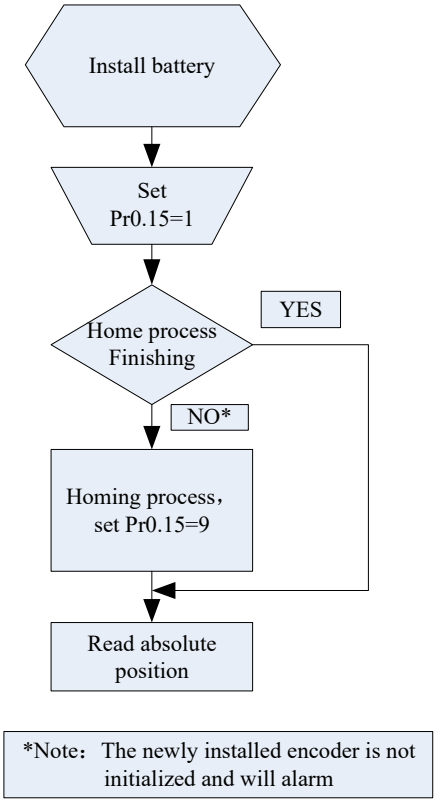

2、Read absolute position

When the rotor turns in clockwise direction, the revolution count will be negative; turns in counter clockwise direction, the count will be positive. No. of revolutions will be from -32767 to +32767. If the count number reaches +32767 in counter clockwise direction, the count will revert back to -32768, -32767 and vice versa for clockwise direction.

As for position data, it depends on the precision of the encoder. For 17 bit = 0-131071, 23 bit = 0-8388607

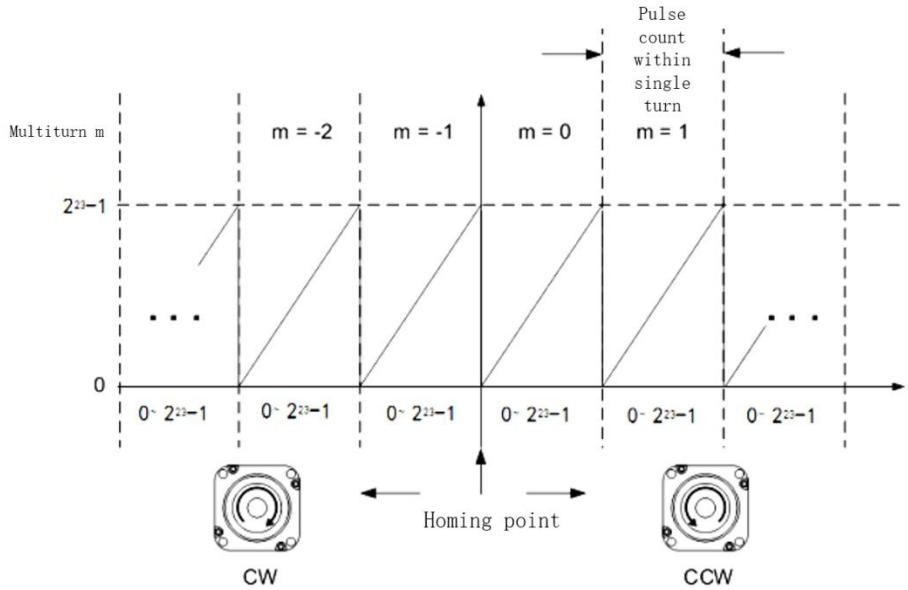

Multiturn rotational mode

For absolute encoder, multiturn rotational mode (Pr0.15 = 2, Pr6.63 set to multiturn upper limit) is added on top of incremental mode and multiturn linear mode. Actual feedback multiturn data is always between 0 – [Pr6.63 + 1], regardless of the direction of rotation. There is no limit to no. of rotation and no data overflow.

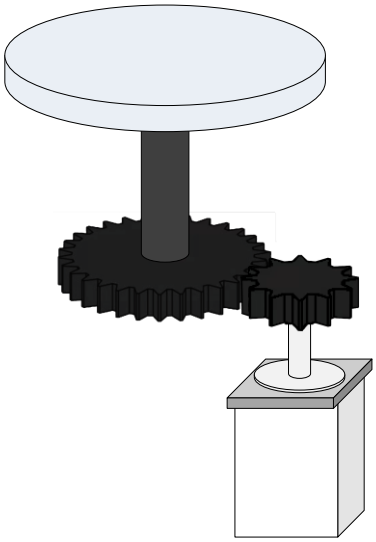

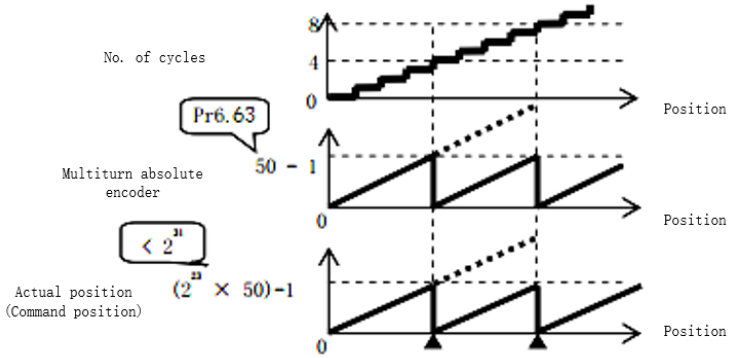

Single turn absolute mode

Use this mode when the travel distance of the axis is within a single turn of the rotor.

1. Target position input range – EtherCAT

When using 23-bit absolute encoder, under single turn absolute mode, electronic gear ratio =1:1

Homing point offset 607Ch = 0, target position range = 0 – [2^{23}-1]

Axis is homed, target position range = 607Ch – [2^{23}-1+607Ch]

When electronic gear ratio = 1:1, 607Ch = 0:

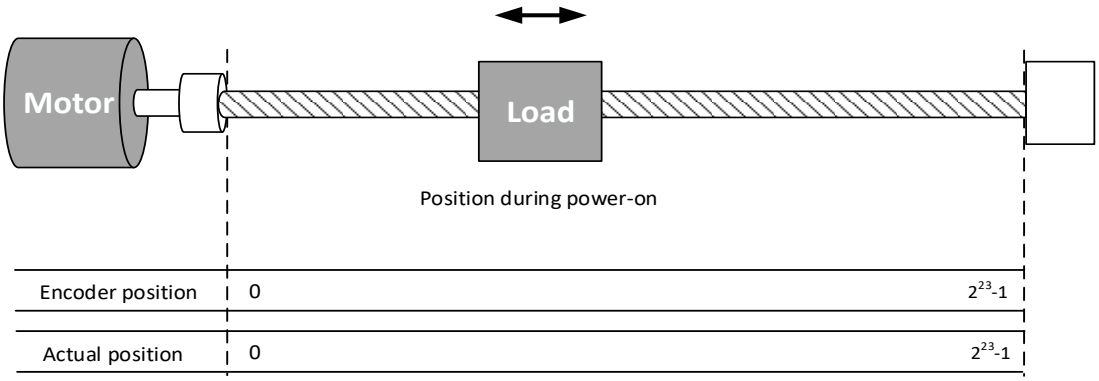

When electronic gear ratio = 1:1, 607Ch = 10000:

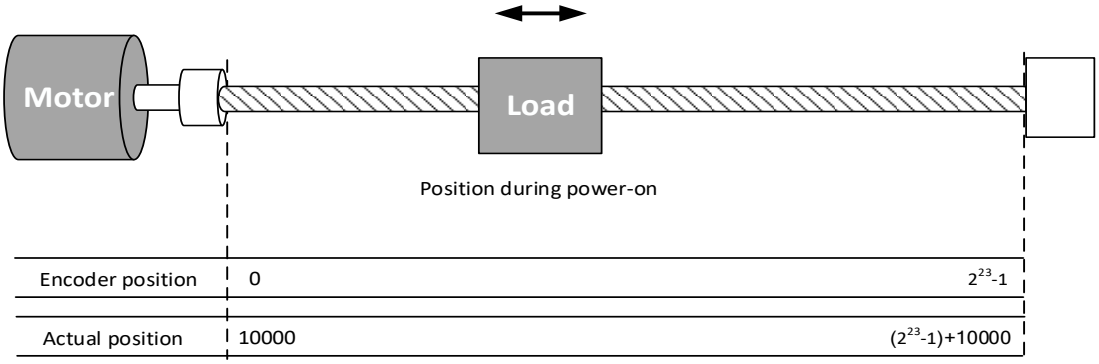

3、Clear multiturn position

Before clearing multiturn position, axis needs to be homed. After clearing multiturn position, revolution count = 0 but absolute position remains unchanged and Err153 alarm will be cleared.

Please make sure the homing point is within the range of 1 revolution of the rotor. Installation and setup of the homing point can be set with the use of auxiliary function D21 on the front panel.

By setting Pr0.15 to 9, multiturn position will be cleared.

Please take notice of motor position during power on. Range of motion of a motor depends on the position of the motor during power on (23-bit absolute encoder as example).

If the motor position is as shown below during power on. The range of motion of the motor is within the range of a single turn of the motor from motor position during power on.

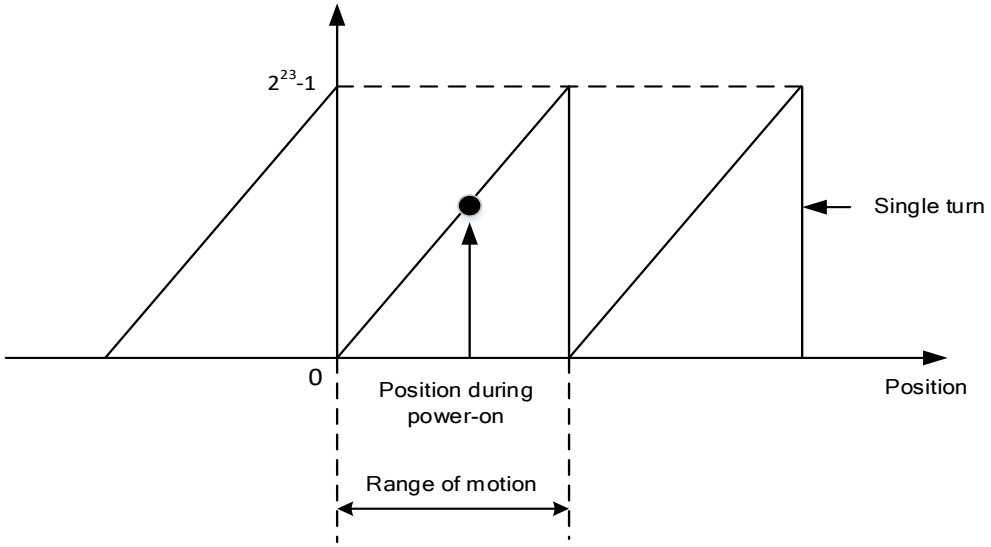

If power is turned off at position as shown below and power on when motor reaches the position below. Motor range of motion changes as shown below.

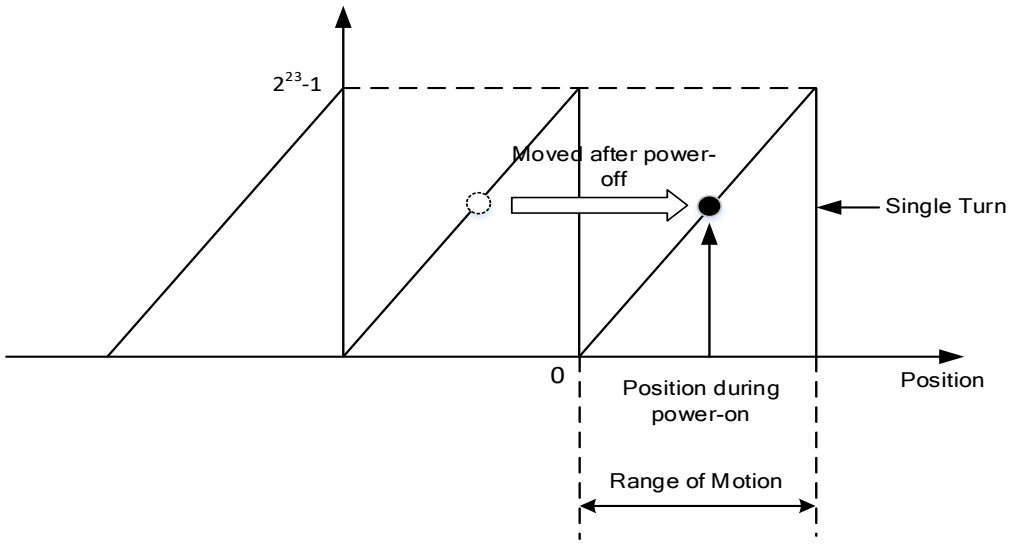

Absolute Encoder Related Alarm

The alarm can determine if absolute value encoder is valid. If battery power is low, not a motor with absolute encoder, encoder error etc. occurs, user can find out about the error from alarm output or on the front panel. Controller will stop any operation until alarm is cleared.

Alarm output:
Err153 will be shown on front panel or by I/O ALM signal and from controller.

Err153 might occur,

（1）If absolute encoder is used for the first time and due to installation of new batteries Axis needs to be homed and multiturn data needs to be cleared.

（2）If battery voltage is lower than 3.2v. Replace battery and restart the motor.

（3）If battery voltage is lower than 2.5v or battery power was cut off. Replacing the battery won't clear the alarm. Axis needs to be homed and multiturn data needs to be cleared.

4、Alarm processing flow chart

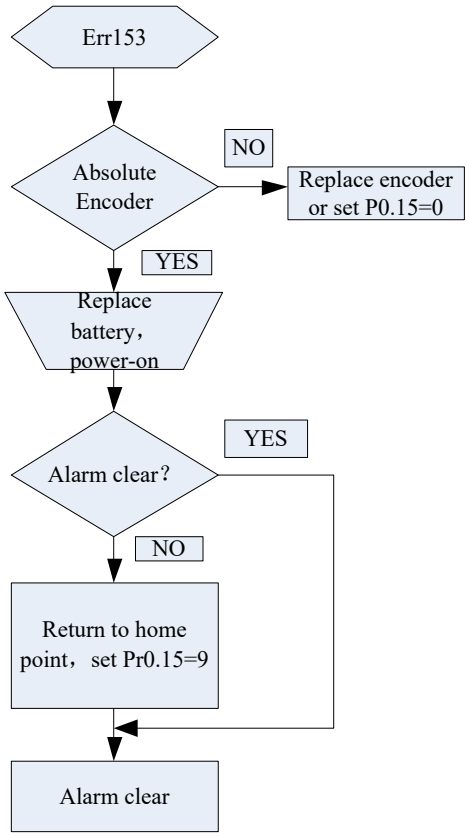

Chapter 6 PROFINET

PROFINET is a real time protocol based on Ethernet, used primarily for data exchange between programmable logic controllers.

PROFINET provides 2 types of real time communication: PROFINET IO RT (Real Time) and PROFINET IO IRT (Isochronous Real Time). PROFINET IO RT is applicable in data and alarm warnings transfer when there is not any specific hardware request. PROFINET IO IRT is applicable in data transference with requirement for more precise timing but it requires hardware such I/O devices or switch to support it.

6.1 Supported PROFINET Telegram

EL7-PN series servo drives support application classes AC1, AC3 and AC4. Standard telegrams and Siemens telegrams are supported under velocity control mode and positioning control mode. Process data received is receive word; process data sent is send word.

Telegram	Max. PZD Number	
	Receive word	Send word
Standard 1	2	2
Standard 3	5	9
Siemens 102	6	10
Siemens 105	10	10
Siemens 111	12	12

Telegrams used in velocity control mode

Telegram	1	1
Application class	AC1	AC1
PZD1	STW1	ZSW1
PZD2	NSOLL_A	NIST_A

Telegram	3	3
Application class	AC1,4	AC1,4
PZD1	STW1	ZSW1
PZD2	NSOLL_B	NIST_B
PZD3		
PZD4	STW2	ZSW2
PZD5	G1_STW	G1_ZSW
PZD6	G1_XIST1	XERR
PZD7		
PZD8	G1_XIST2	KPC
PZD9		

Telegram	102	102
Application class	AC1,4	AC1,4
PZD1	STW1	ZSW1
PZD2	NSOLL_B	NIST_B
PZD3		
PZD4	STW2	ZSW2
PZD5	MOMRED	MELDW
PZD6	G1_STW	G1_ZSW
PZD7		G1_XIST1
PZD8		
PZD9		G1_XIST2
PZD10		

Telegram	105	105
Application class	AC4	AC4
PZD1	STW1	ZSW1
PZD2	NSOLL_B	NIST_B
PZD3		
PZD4	STW2	ZSW2
PZD5	MOMRED	MELDW
PZD6	G1_STW	G1_ZSW
PZD7	XERR	G1_XIST1
PZD8		
PZD9	KPC	G1_XIST2
PZD10		

Telegram used in position control mode

Telegram	111	111
Application class	AC3	AC3
PZD1	STW1	ZSW1
PZD2	POS_STW1	POS_ZSW1
PZD3	POS_STW2	POS_ZSW2
PZD4	STW2	ZSW2
PZD5	OVERRIDE	MELDW
PZD6	MDI_TARPOS	XIST_A
PZD7		
PZD8	MDI_VELOCITY	XIST_B
PZD9		
PZD10	MDI_ACC	FAULT_CODE
PZD11	MDI_DEC	WARN_CODE
PZD12	USER_PZD	USER_PZD

6.2 I/O data signal

Signal	Label	Send/Receive word	Data type	Scaling
STW1	Control word 1	Receive	U16	
STW2	Control word 2	Receive	U16	
ZSW1	Status word 1	Send	U16	
ZSW2	Status word 2	Send	U16	
NSOLL_A	Setpoint speed A	Receive	I16	4000hex≒3000rpm
NSOLL_B	Setpoint speed B	Receive	I32	40000000hex≒3000rpm
NIST_A	Actual speed A	Send	I16	4000hex≒3000rpm
NIST_B	Actual speed B	Send	I32	40000000hex≒3000rpm
MOMRED	Torque reduction	Receive	U16	4000hex ≒ Max.Torque
MELDW	Message word	Send	U16	
KPC	Position controller gain factor	Receive	I32	
XERR	Position deviation	Receive	I32	
M_ADD1	Torque additional value	Send	I16	4000hex ≒ Max.Torque C000hex ≒ Min. Torque
M_LIMIT_POS	Positive torque limit	Send	I16	4000hex ≒ Max.Torque
M_LIMIT_NEG	Negative torque limit	Send	I16	C000hex ≒ Min. Torque
MELDW	Message word	Send	U16	
G1_STW	Encoder 1 control word	Receive	U16	
G1_ZTW	Encoder 1 status word	Send	U16	
G1_XIST1	Encoder 1 actual position 1	Send	U32	
G1_XIST2	Encoder 1 actual position 2	Send	U32	
MDI_TARPOS	MDI position	Receive	I32	1hex≒1 LU
MDI_VELOCITY	MDI velocity	Receive	I32	1hex≒1000 LU/min
MDI_ACC	MDI acceleration rate	Receive	I16	4000hex≒100%
MDI_DEC	MDI deceleration rate	Receive	I16	4000hex≒100%
XIST_A	Actual position value A	Send	I32	1hex≒1 LU
OVERRIDE	Position velocity override	Receive	I16	4000hex≒100%
FAULT_CODE	Fault code	Send	U16	
WARN_CODE	Warning code	Send	U16	
user	User defined receive data Non-function Additional torque	Receive	I16	4000hex≒100%
user	User defined Send data Non-function Actual torque Actual current DI Status	Send	I16	4000hex≒100%

6.3 Control words

6.3.1 STW 1

For telegram 1, 3:

Bit	Description
STW1.0	↑= ON（Enable pulse） 0 = OFF1（Brake using ramp function generator, disable pulse, ready to be connected）
STW1.1	1 = no OFF2（Enable operation） 0 = OFF2（Disable pulse immediately and disallow connection）
STW1.2	1 = no OFF3（Enable operation） 0 = OFF3（Brake through OFF3 ramp p1135, disable pulse and disallow connection）
STW1.3	1 = Enable operation（Enable pulse） 0 = Disable operation（Disable pulse）
STW1.4	1 = Operation conditions（Enable ramp function generator） 0 = Disable ramp function generator（Set ramp function generator output = 0）
STW1.5	1 = Resume ramp function generator 0 = Pause ramp function generator（Pause ramp function generator output）
STW1.6	1 = Enable set value 0 = Disable set value（Set ramp function generator input = 0）
STW1.7	↑= 1. Fault acknowledge
STW1.8	Reserved
STW1.9	
STW1.10	1 = PLC Control
STW1.11	Reserved
STW1.12	
STW1.13	
STW1.14	
STW1.15	

For telegram 102,105:

Bit	Description
STW1.0	↑= ON（Enable pulse） 0 = OFF1（Brake using ramp function generator, disable pulse, ready to be connected）
STW1.1	1 = no OFF2（Enable operation） 0 = OFF2（Disable pulse immediately and inhibit enabling）
STW1.2	1 = no OFF3（Enable operation） 0 = OFF3（Brake through OFF3 ramp p1135, disable pulse and disallow connection）
STW1.3	1 = Enable operation（Enable pulse） 0 = Disable operation（Disable pulse）
STW1.4	1 = Operation conditions（Enable ramp function generator） 0 = Disable ramp function generator（Set ramp function generator output = 0）
STW1.5	1 = Resume ramp function generator 0 = Pause ramp function generator（Pause ramp function generator output）
STW1.6	1 = Enable set value 0 = Disable set value（Set ramp function generator input = 0）

STW1.7	↑= 1. Fault acknowledge
STW1.8	Reserved
STW1.9	
STW1.10	1 = PLC Control
STW1.11	1 = Ramp-function generator active
STW1.12	1 = Unconditionally activate holding brake
STW1.13	Reserved
STW1.14	1 = Closed loop torque control; 0 = Closed loop velocity control
STW1.15	Reserved

For telegram 111:

Bit	Description
STW1.0	↑= ON（Enable pulse） 0 = OFF1（Brake using ramp generator, disable pulse, ready to be connected）
STW1.1	1 = no OFF2（Enable operation） 0 = OFF2（Disable pulse immediately and disallow connection）
STW1.2	1 = no OFF3（Enable operation） 0 = OFF3（Brake through OFF3 ramp p1135, disable pulse and disallow connection）
STW1.3	1 = Enable operation（Enable pulse） 0 = Disable operation（Disable pulse）
STW1.4	1 = Enable operation 0 = Reject operation
STW1.5	1 = Normal operation 0 = Stop operation
STW1.6	↑= 1 Activate operation
STW1.7	↑= 1 Fault acknowledge
STW1.8	1 = JOG1 effective
STW1.9	1 = JOG2 effective
STW1.10	1 = PLC Control
STW1.11	1 = Start homing 0 = Stop homing
STW1.12	Reserved
STW1.13	
STW1.14	
STW1.15	

6.3.2 STW2

For telegram 102,105, 111:

Bit	Description
STW2.0	Reserved
STW2.1	
STW2.2	
STW2.3	
STW2.4	
STW2.5	
STW2.6	
STW2.7	
STW2.8	
STW2.9	

STW2.10	
STW2.11	
STW2.12	Master sign-of-life, bit 0
STW2.13	Master sign-of-life, bit 1
STW2.14	Master sign-of-life, bit 2
STW2.15	Master sign-of-life, bit 3

6.3.3 POS_STW1/2

For telegram 111:

Bit	Description
POS_STW1.0	Reserved
POS_STW1.1	
POS_STW1.2	
POS_STW1.3	
POS_STW1.4	
POS_STW1.5	
POS_STW1.6	
POS_STW1.7	
POS_STW1.8	1 = Absolute positioning selected 0 = Relative positioning selected
POS_STW1.9	Reserved
POS_STW1.10	
POS_STW1.11	
POS_STW1.12	1 = Continuous transfer 0 = Activate MDI operation through STW 1 ↑
POS_STW1.13	Reserved
POS_STW1.14	
POS_STW1.15	1 = MDI selection

Bit	Description
POS_STW2.0	Reserved
POS_STW2.1	
POS_STW2.2	1 = PLC homing signal
POS_STW2.3	
POS_STW2.4	
POS_STW2.5	1 = JOG incremental mode 0 = JOG velocity mode
POS_STW2.6	Reserved
POS_STW2.7	
POS_STW2.8	
POS_STW2.9	
POS_STW2.10	
POS_STW2.11	
POS_STW2.12	
POS_STW2.13	
POS_STW2.14	1 = Use software position limit
POS_STW2.15	1 = Use hardware position limit

6.4 Status word

6.4.1 ZSW1

For Telegram 1, 3:

Bit	Description
ZSW1.0	1 = Servo ready to be enabled
ZSW1.1	1 = Ready for operation
ZSW1.2	1 = Operation enabled
ZSW1.3	1 = Fault
ZSW1.4	1 = Free stop invalid（OFF2 invalid）
ZSW1.5	1 = Quick stop invalid（OFF3 invalid）
ZSW1.6	1 = Disable connection
ZSW1.7	1 = Alarm
ZSW1.8	1 = Deviation of actual and set velocity within tolerance
ZSW1.9	1 = PLC control request
ZSW1.10	1 = Velocity reached
ZSW1.11	Reserved
ZSW1.12	1 = Deactivated holding brake
ZSW1.13	1 = Motor temperature is normal
ZSW1.14	1 = Motor forward rotation 0 = Motor reverse rotation
ZSW1.15	1 = Power supply temperature is normal

For Telegram 102, 105:

Bit	Description
ZSW1.0	1 = Servo ready to be enabled
ZSW1.1	1 = Ready for operation
ZSW1.2	1 = Operation enabled
ZSW1.3	1 = Fault
ZSW1.4	1 = Free stop invalid（OFF2 invalid）
ZSW1.5	1 = Quick stop invalid（OFF3 invalid）
ZSW1.6	1 = Disallow enabling
ZSW1.7	1 = Alarm
ZSW1.8	1 = Deviation of actual and set velocity within tolerance
ZSW1.9	1 = PLC control request
ZSW1.10	1 = Velocity reached
ZSW1.11	Reserved
ZSW1.12	1 = Deactivated holding brake
ZSW1.13	1 = Motor temperature is normal
ZSW1.14	1 = Motor forward rotation 0 = Motor reverse rotation
ZSW1.15	1 = Power supply temperature is normal

For Telegram 111:

Bit	Description
ZSW1.0	1 = Activate software position limit
ZSW1.1	1 = Deactivate stops
ZSW1.2	1 = Operation enabled
ZSW1.3	1 = Fault
ZSW1.4	1 = Free stop invalid（OFF2 invalid）
ZSW1.5	1 = Quick stop invalid（OFF3 invalid）
ZSW1.6	1 = Disable connection
ZSW1.7	1 = Alarm
ZSW1.8	1 = Following error within tolerance
ZSW1.9	1 = PLC control request
ZSW1.10	1 = Position reached
ZSW1.11	1 = Reference point is set
ZSW1.12	↑= Activate traversing block or MDI settings
ZSW1.13	1 = Axis stopped; 0 = Axis in motion
ZSW1.14	1 = Axis accelerated
ZSW1.15	1 = Axis decelerated

6.4.2 ZSW2

For Telegram 102, 105:

Bit	Description
ZSW2.0	Reserved
ZSW2.1	
ZSW2.2	
ZSW2.3	
ZSW2.4	
ZSW2.5	
ZSW2.6	
ZSW2.7	Activate holding brake
ZSW2.8	1 = Move to fixed stop
ZSW2.9	Reserved
ZSW2.10	1 = Enable pulse
ZSW2.11	Reserved
ZSW2.12	Slave sign-of-life, bit 0
ZSW2.13	Slave sign-of-life, bit 1
ZSW2.14	Slave sign-of-life, bit 2
ZSW2.15	Slave sign-of-life, bit 3

For Telegram 111:

Bit	Description
ZSW2.0	Reserved
ZSW2.1	
ZSW2.2	
ZSW2.3	
ZSW2.4	
ZSW2.5	
ZSW2.6	
ZSW2.7	
ZSW2.8	
ZSW2.9	
ZSW2.10	1 = Enable pulse
ZSW2.11	Reserved
ZSW2.12	Slave sign-of-life, bit 0
ZSW2.13	Slave sign-of-life, bit 1
ZSW2.14	Slave sign-of-life, bit 2
ZSW2.15	Slave sign-of-life, bit 3

6.4.2 POS_ZSW1/2

For Telegram 111:

Bit	Description
POS_ZSW1.0	Reserved
POS_ZSW1.1	
POS_ZSW1.2	
POS_ZSW1.3	
POS_ZSW1.4	
POS_ZSW1.5	
POS_ZSW1.6	
POS_ZSW1.7	
POS_ZSW1.8	1 = Negative position limit activated
POS_ZSW1.9	1 = Positive position limit activated
POS_ZSW1.10	1 = JOG activated
POS_ZSW1.11	1 = Homing activated
POS_ZSW1.12	Reserved
POS_ZSW1.13	
POS_ZSW1.14	
POS_ZSW1.15	1 = MDI activated 0 = MDI deactivated

Bit	Description
POS_ZSW2.0	Reserved
POS_ZSW2.1	1 = Velocity limit activated
POS_ZSW2.2	Reserved
POS_ZSW2.3	
POS_ZSW2.4	1 = Axis forward motion
POS_ZSW2.5	1 = Axis reverse motion
POS_ZSW2.6	1 = Arrived at software negative limit switch
POS_ZSW2.7	1 = Arrived at software positive limit switch
POS_ZSW2.8	Reserved
POS_ZSW2.9	
POS_ZSW2.10	
POS_ZSW2.11	
POS_ZSW2.12	
POS_ZSW2.13	
POS_ZSW2.14	
POS_ZSW2.15	

6.5 Homing mode supported under Telegram 111

Torque limiting mode

Mode-6： Search for homing point in **negative direction** at **low velocity**. Stop after torque reaches the value set in Pr5.39 and homing done signal delivers after the time value set in Pr5.37

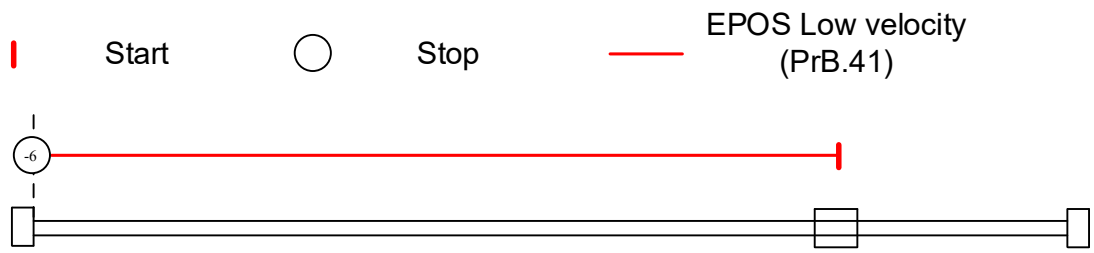

Mode -5： Search for homing point in **positive direction** at **low velocity**. Stop after torque reaches the value set in Pr5.39 and homing done signal delivers after the time value set in Pr5.37

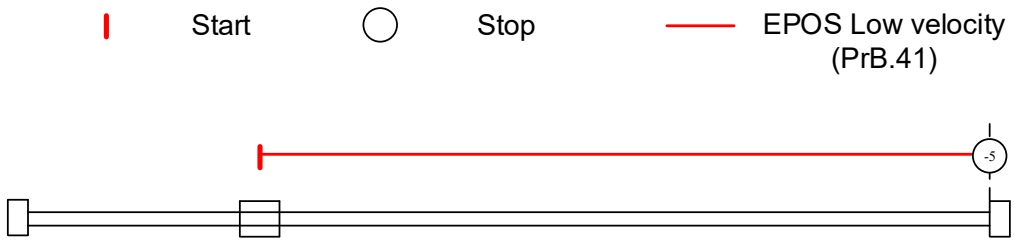

Mode -4： Search for homing point in **negative direction** at **high velocity**. Move in **positive direction** after torque reaches the value set in Pr5.39, stops when torque is gone. Homing done signal delivers after the time value set in Pr5.37

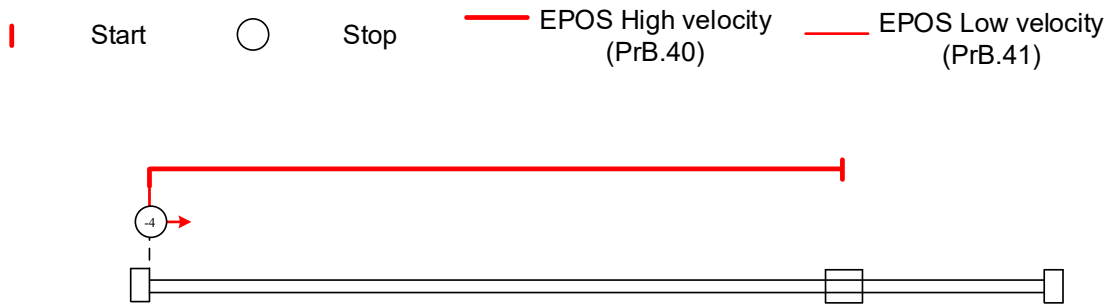

Mode -3：Search for homing point in **positive direction** at **high velocity**. Move in **negative direction** after torque reaches the value set in Pr5.39, stops when torque is gone. Homing done signal delivers after the time value set in Pr5.37

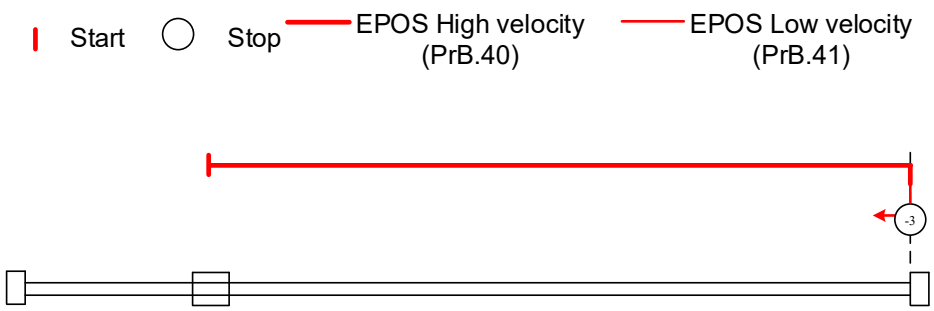

Torque limiting+Z-signal mode

Mode -2：Search for homing point in **negative direction** at **high velocity**. Move in **positive direction** after torque reaches the value set in Pr5.39, stops when torque is gone with the **first Z-signal**.

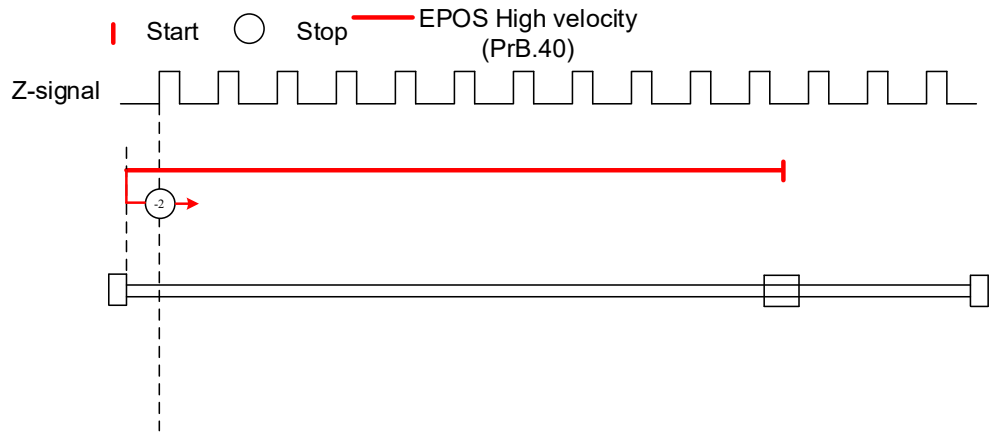

Mode -1：Search for homing point in **positive direction** at **high velocity**. Move in **negative direction** after torque reaches the value set in Pr5.39, stops when torque is gone with the **first Z-signal**.

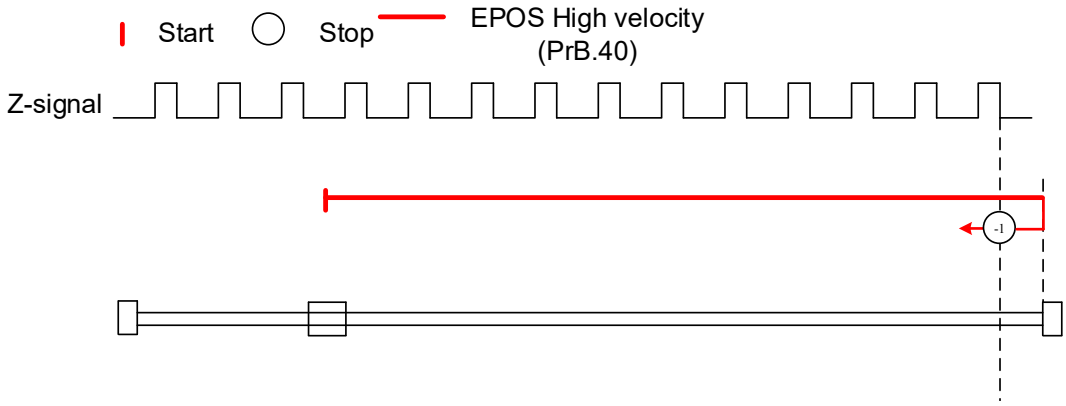

Limit switch signal+Z-signal mode

Mode 1:

Diagram A: *Negative limit switch = OFF*

1. Move in **negative direction** at **high velocity** until **negative limit switch valid.**
2. Move in **positive direction** at **low velocity** and stops **after negative limit switch** and **first encoder Z-signal valid**

Diagram B: *Negative limit switch = ON*

1. Start to move at **negative limit switch position** in **positive direction** at **high velocity** until **negative limit switch invalid.**
2. Move in **negative direction** at **high velocity** until **negative limit switch valid.**
3. Move in **positive direction** at **low velocity** and stops **after negative limit switch** and **first encoder Z-signal valid**

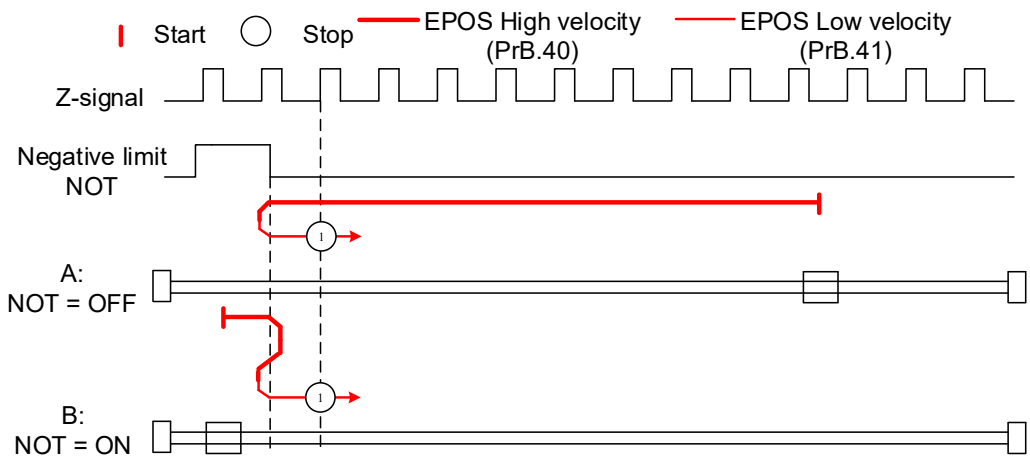

Mode 2:

Diagram A: *Positive limit switch = OFF*

1. Move in **positive direction** at **high velocity** until **positive limit switch valid.**
2. Move in **negative direction** at **low velocity** and stops **after positive limit switch** and **first encoder Z-signal valid**

Diagram B: *Positive limit switch = ON*

1. Start to move at **positive limit switch position** in **negative direction** at **high velocity** until **positive limit switch invalid.**
2. Move in **positive direction** at **high velocity** until **positive limit switch valid.**
3. Move in **negative direction** at **low velocity** and stops **after positive limit switch** and **first encoder Z-signal valid**

If the negative limit signal is valid during the homing process, the status word (6041h) bit 13 will be valid, indicating homing error and the motor will stop immediately.

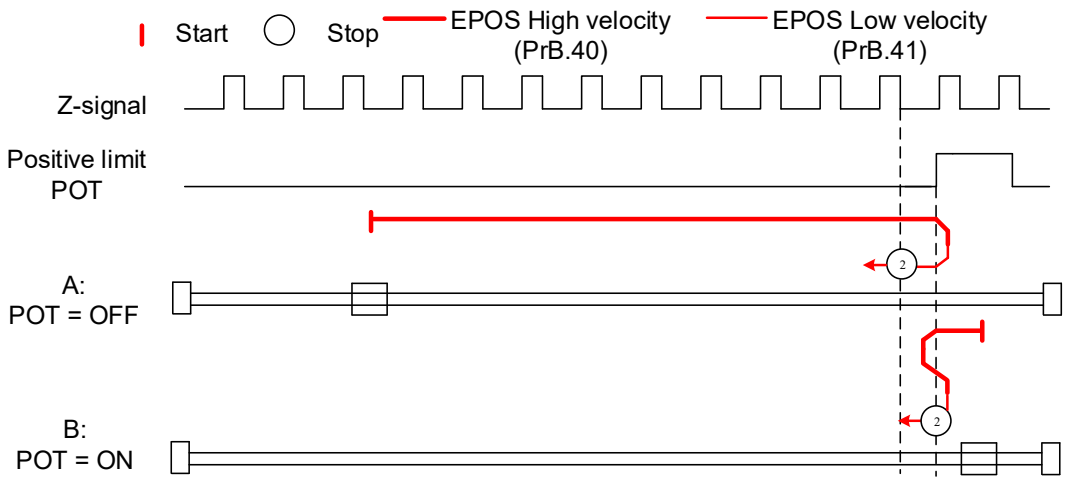

Homing switch signal+Z-signal mode

Mode 3:

Diagram A: *Homing switch = OFF*

1. Move in **positive direction** at **high velocity** until **homing switch valid.**
2. Move in **negative direction** at **low velocity** and stops **after homing switch** and **first encoder Z-signal valid**

Diagram B: *Homing switch = ON*

1. Start to move at **homing switch position** in **negative direction** at **high velocity** until **after homing switch.**
2. Move in **positive direction** at **high velocity** until **homing switch valid.**
3. Move in **negative direction** at **low velocity** and stops **after homing switch** and **first encoder Z-signal valid**

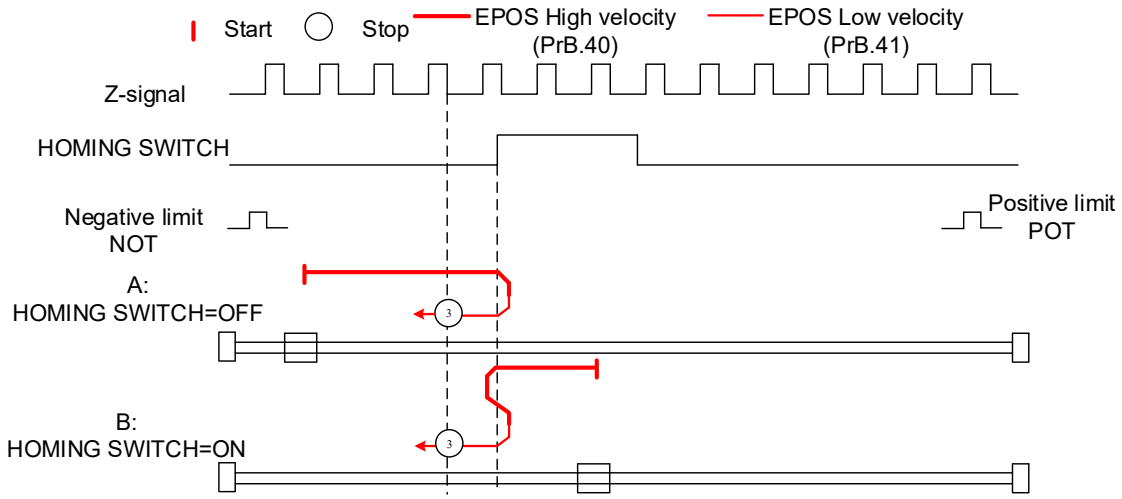

Mode 4:
Diagram A: *Homing switch = OFF*
1. Move in **positive direction** at **high velocity** until **homing switch valid.**
2. Move in **negative direction** at **high velocity** until **homing switch invalid.**
3. Move in **positive direction** at **low velocity** and stops after **homing switch valid** and **first encoder Z-signal valid**

Diagram B: *Homing switch = ON*
1. Start to move at **homing switch position** in **negative direction** at **high velocity** until **after homing switch.**
2. Move in **positive direction** at **low velocity** and stops after **homing switch valid** and **first encoder Z-signal valid**

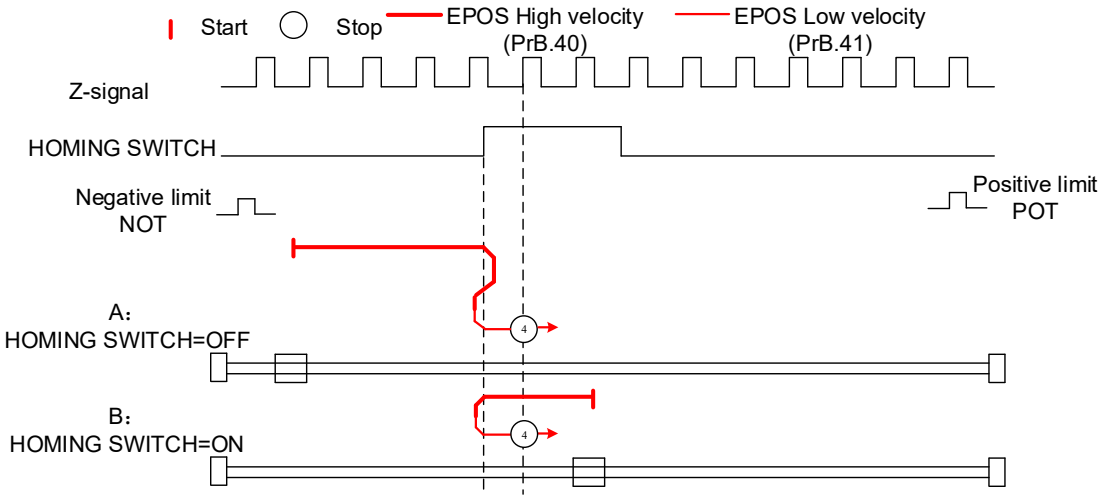

Mode 5:
Diagram A: *Homing switch = OFF*
1. Move in **negative direction** at **high velocity** until **homing switch valid.**
2. Move in **positive direction** at **low velocity** and stops **after homing switch** and **first encoder Z-signal valid**

Diagram B: *Homing switch = ON*
1. Start to move at **homing switch position** in **positive direction** at **high velocity** until **after homing switch.**
2. Move in **negative direction** at **high velocity** until **homing switch valid.**
3. Move in **positive direction** at **low velocity** and stops **after homing switch** and **first encoder Z-signal valid**

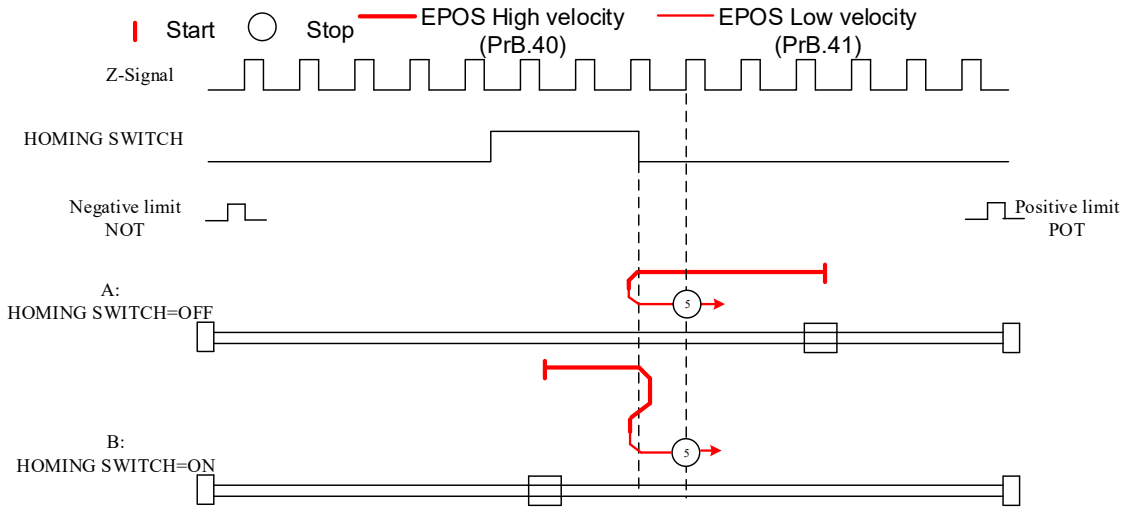

Mode 6:

Diagram A: *Homing switch = OFF*

1. Move in **negative direction** at **high velocity** until **homing switch valid.**
2. Move in **positive direction** at **high velocity** until **homing switch invalid.**
3. Move in **negative direction** at **low velocity** and stops after **homing switch valid** and **first encoder Z-signal valid**

Diagram B: *Homing switch = ON*

1. Start to move at **homing switch position** in **positive direction** at **high velocity** until **after homing switch.**
2. Move in **negative direction** at **low velocity** and stops after **homing switch valid** and **first encoder Z-signal valid**

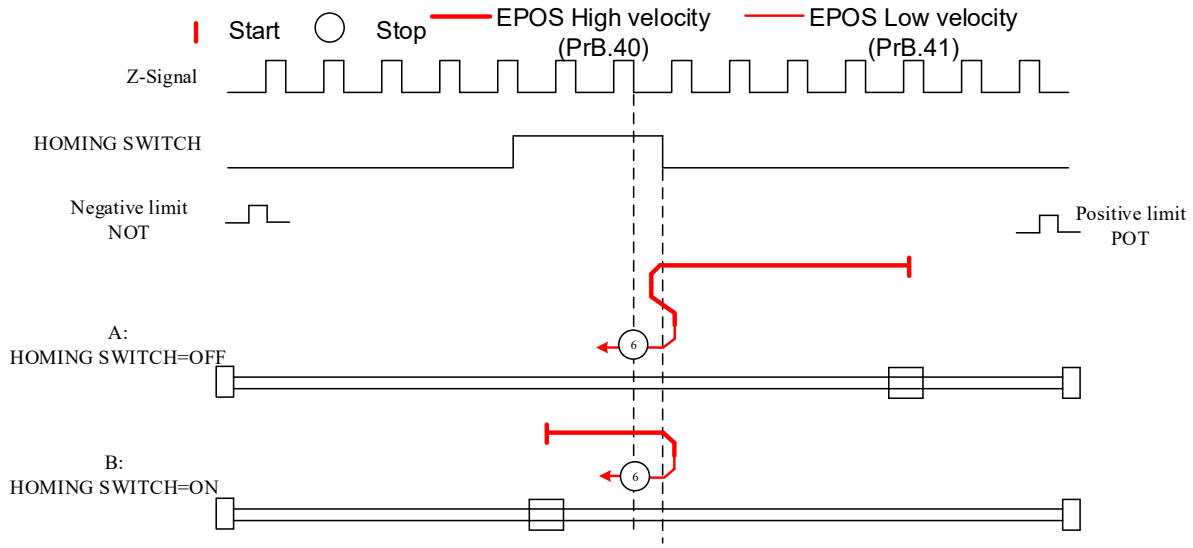

Limit switch signal+homing switch signal+Z-signal mode

Mode 7

Diagram A: *Homing switch & positive limit switch = OFF*

1. Move in **positive direction** at **high velocity** until **homing switch valid.**
2. Move in **negative direction** at **low velocity** and stops after **homing switch** and **first encoder Z-signal valid.**

Diagram B: *Homing switch = ON, positive limit switch = OFF*

1. Start to move at **homing switch position** in **negative direction** at **high velocity** until **after homing switch.**
2. Move in **positive direction** at **high velocity** until **homing switch valid.**
3. Move in **negative direction** at **low velocity** and stops **after homing switch** and **first encoder Z-signal valid**

Diagram C: *Homing switch & positive limit switch = OFF*

1. Move in **positive direction** at **high velocity** until **positive limit switch valid**.
2. Move in **negative direction** at **high velocity** until **after homing switch**.
3. Move in **positive direction** at **high velocity** until **homing switch valid**.
4. Move in **negative direction** at **low velocity** and stops **after homing switch** and **first encoder Z signal valid**

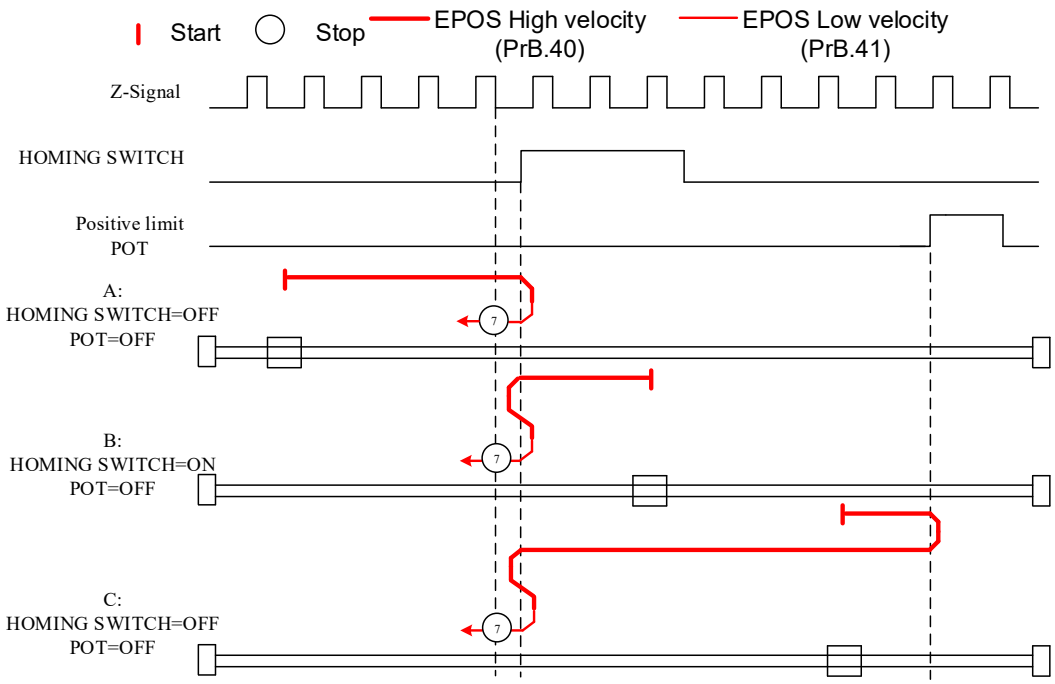

Mode 8

Diagram A: *Homing switch & positive limit switch = OFF*

1. Move in **positive direction** at **high velocity** until **homing switch valid.**
2. Move in **negative direction** at **high velocity** until **after homing switch.**
3. Move in **positive direction** at **low velocity** and stops after **homing switch valid** and **first encoder Z-signal valid.**

Diagram B: *Homing switch = ON, positive limit switch = OFF*

1. Start to move at **homing switch position** in **negative direction** at **high velocity** until **after homing switch.**
2. Move in **positive direction** at **low velocity** and stops after **homing switch valid** and **first encoder Z-signal valid**

Diagram C: *Homing switch & positive limit switch = OFF*

1. Move in **positive direction** at **high velocity** until **positive limit switch valid**.
2. Move in **negative direction** at **high velocity** until **after homing switch**.
3. Move in **positive direction** at **low velocity** and stops after **homing switch valid** and **first encoder Z-signal valid.**

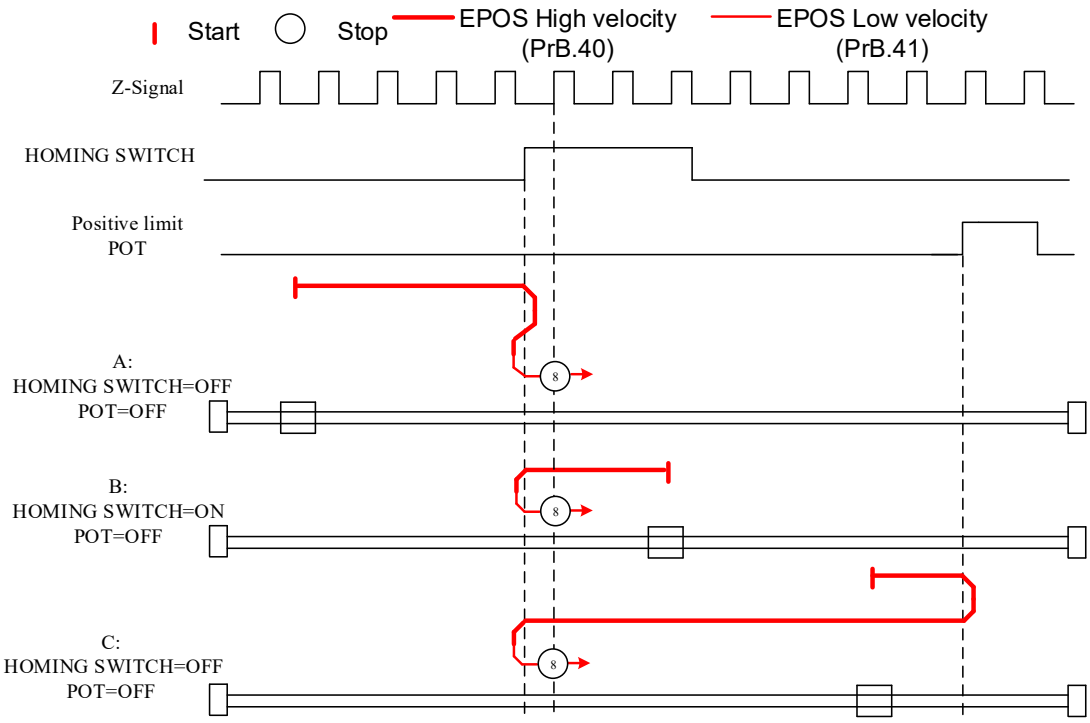

Mode 9

Diagram A: *Homing switch & positive limit switch = OFF*

1. Move in **positive direction** at **high velocity** until **after homing switch.**
2. Move in **negative direction** at **low velocity** and stops after **homing switch valid** and **first encoder Z-signal valid.**

Diagram B: *Homing switch = ON, positive limit switch = OFF*

1. Start to move at **homing switch position** in **positive direction** at **high velocity** until **homing switch invalid.**
2. Move in **negative direction** at **low velocity** and stops after **homing switch valid** and **first encoder Z-signal valid**

Diagram C: *Homing switch & positive limit switch = OFF*

1. Move in **positive direction** at **high velocity** until **positive limit switch valid**.
2. Move in **negative direction** at **high velocity** until **homing switch valid**.
3. Move in **positive direction** at **high velocity** until **after homing switch**.
4. Move in **negative direction** at **low velocity** and stops after **homing switch valid** and **first encoder Z signal valid**

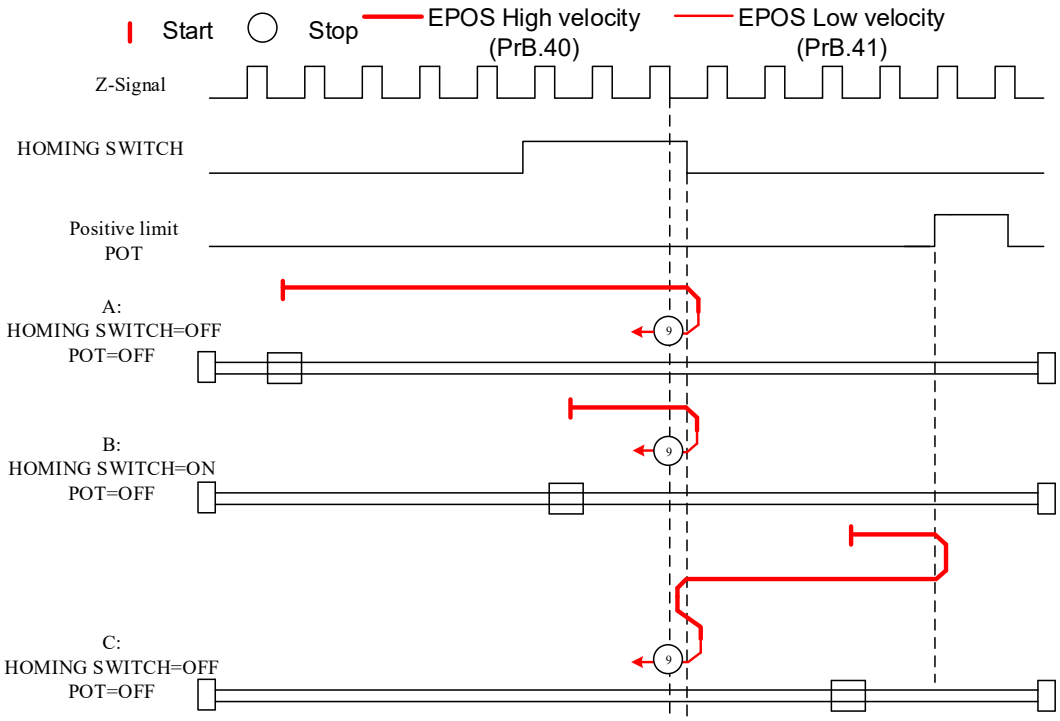

Mode 10

Diagram A: *Homing switch & positive limit switch = OFF*

1. Move in **positive direction** at **high velocity** until **after homing switch.**
2. Move in **negative direction** at **high velocity** until **homing switch valid.**
3. Move in **positive direction** at **low velocity** and stops **after homing switch** and **first encoder Z-signal valid.**

Diagram B: *Homing switch = ON, positive limit switch = OFF*

1. Start to move at **homing switch position** in **positive direction** at **high velocity** until **after homing switch.**
2. Move in **negative direction** at **high velocity** until **homing switch valid.**
3. Move in **positive direction** at **low velocity** and stops **after homing switch** and **first encoder Z-signal valid**

Diagram C: *Homing switch & positive limit switch = OFF*

1. Move in **positive direction** at **high velocity** until positive **limit switch valid**.
2. Move in **negative direction** at **high velocity** until **homing switch valid**.
3. Move in **positive direction** at **low velocity** and stops **after homing switch** and **first encoder Z signal valid**

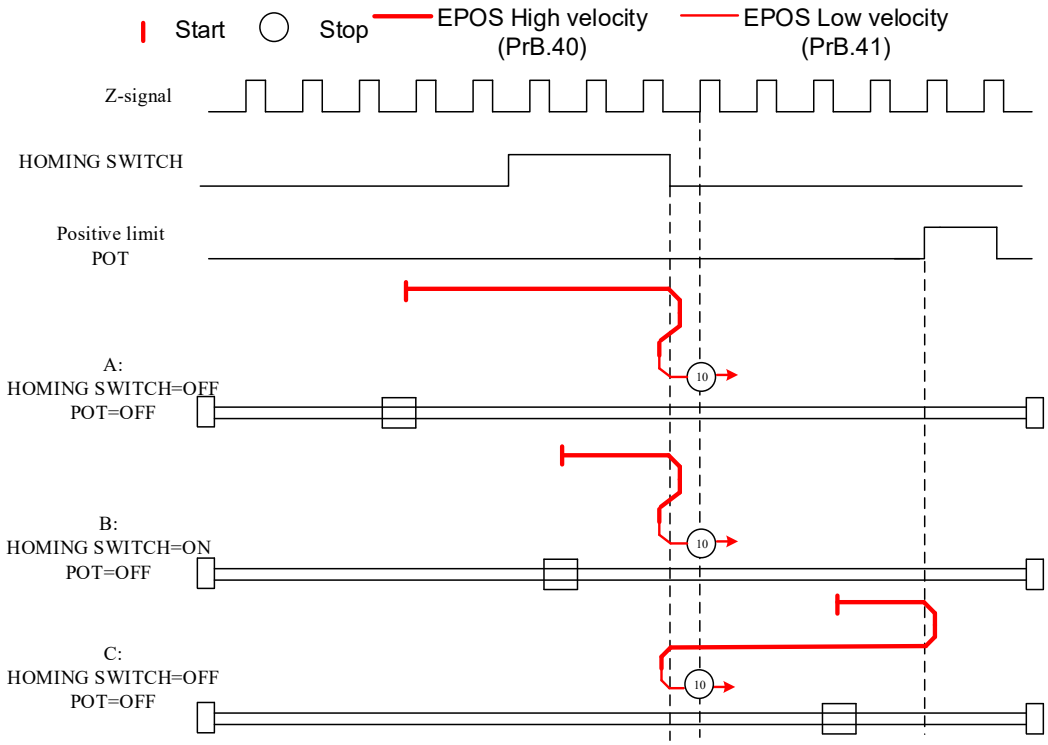

Mode 11

Diagram A: *Homing switch & negative limit switch = OFF*

1. Move in **negative direction** at **high velocity** until **homing switch valid.**
2. Move in **positive direction** at **low velocity** and stops **after homing switch** and **first encoder Z-signal valid**

Diagram B: *Homing switch = ON, negative limit switch = OFF*

1. Start to move at **homing switch position** in **positive direction** at **high velocity** until **after homing switch.**
2. Move in **negative direction** at **high velocity** until **homing switch valid.**
3. Move in **positive direction** at **low velocity** and stops **after homing switch** and **first encoder Z-signal valid**

Diagram C: *Homing switch & negative limit switch = OFF*

1. Move in **negative direction** at **high velocity** until the **negative limit switch valid**.
2. Move in **positive direction** at **high velocity** until **homing switch invalid**.
3. Move in **negative direction** at **high velocity** until **homing switch valid**.
4. Move in **positive direction** at **low velocity** and stops **after homing switch** and **first encoder Z signal valid**

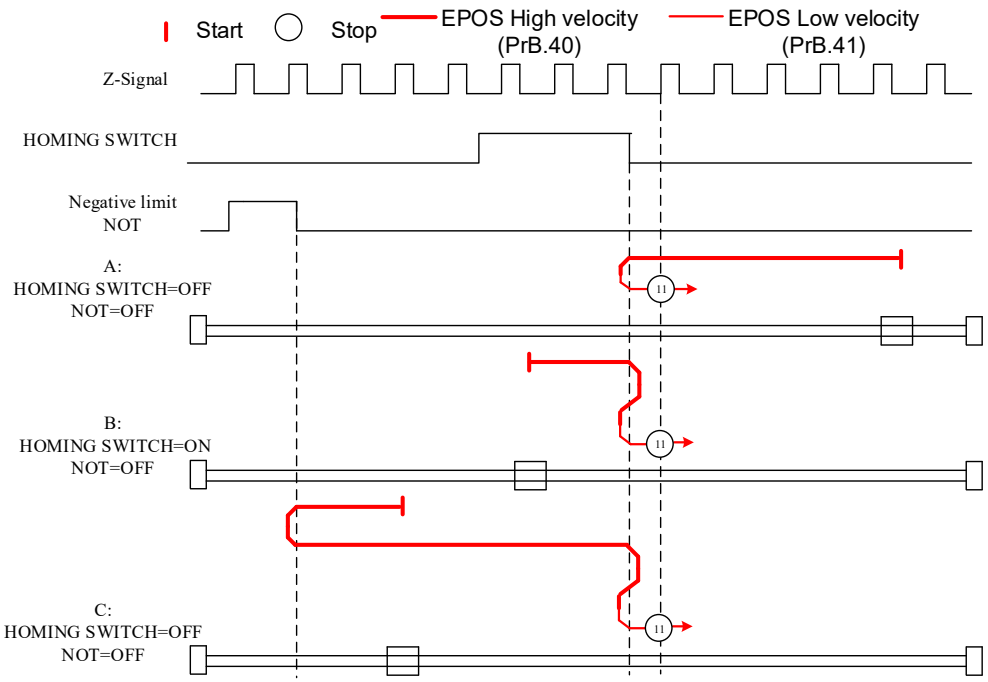

Mode 12

Diagram A: *Homing switch & negative limit switch = OFF*

1. Move in **negative direction** at **high velocity** until **homing switch valid.**
2. Move in **positive direction** at **high velocity** until **after homing switch.**
3. Move in **negative direction** at **low velocity** and stops after **homing switch valid** and **first encoder Z-signal valid**

Diagram B: *Homing switch = ON, negative limit switch = OFF*

1. Move at **homing switch position** in **negative direction** at **high velocity** until **after homing switch**.
2. Move in **positive direction** at **low velocity** and stops after **homing switch valid** and **first encoder Z-signal valid.**

Diagram C: *Homing switch & negative limit switch = OFF*

1. Move in **negative direction** at **high velocity** until **negative limit switch valid.**
2. Move in **positive direction** at **high velocity** until **after homing switch**.
3. Move in **negative direction** at **low velocity** and stops after **homing switch valid** and **first encoder Z-signal valid.**

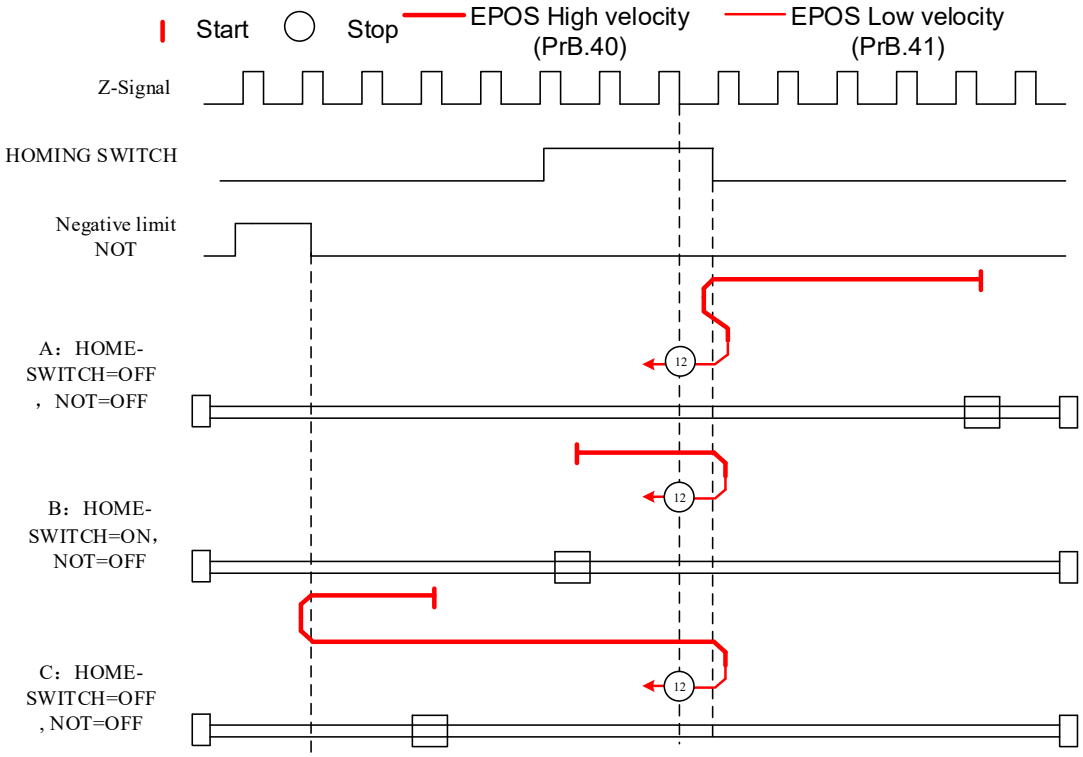

Mode 13

Diagram A: *Homing switch & negative limit switch = OFF*

1. Move in **negative direction** at **high velocity** until **after homing switch**.
2. Move in **positive direction** at **low velocity** and stops after **homing switch valid** and **first encoder Z-signal valid**.

Diagram B: *Homing switch = ON, negative limit switch = OFF*

1. Start to move at **homing switch position** in **negative direction** at **high velocity** until **after homing switch.**
2. Move in positive **direction** at **low velocity** and stops after **homing switch valid** and **first encoder Z-signal valid.**

Diagram C: *Homing switch & negative limit switch = OFF*

1. Move in **negative direction** at **high velocity** until **negative limit switch valid**.
2. Move in **positive direction** at **high velocity** until **homing switch valid**.
3. Move in **negative direction** at **high velocity** until **after homing switch**.
4. Move in **positive direction** at **low velocity** and stops after **homing switch valid** and **first encoder Z-signal valid.**

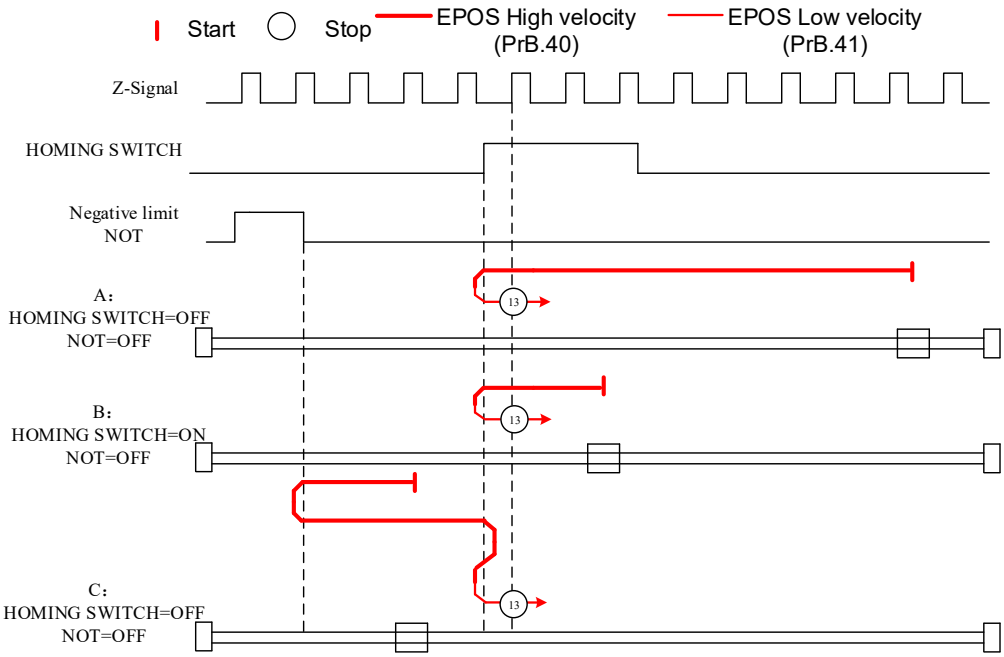

Mode 14

Diagram A: *Homing switch & negative limit switch = OFF*

1. Move in **negative direction** at **high velocity** until **after homing switch**.
2. Move in **positive direction** at **high velocity** until **homing switch valid**.
3. Move in **negative direction** at **low velocity** and stops **after homing switch** and **first encoder Z-signal valid.**

Diagram B: *Homing switch = ON, negative limit switch = OFF*

1. Start to move at **homing switch position** in **negative direction** at **high velocity** until **homing switch invalid**.
2. Move in **positive direction** until **homing switch valid**.
3. Move in **negative direction** at **low velocity** and stops **after homing switch** and **first encoder Z signal valid.**

Diagram C: *Homing switch & negative limit switch = OFF*

1. Move in **negative direction** at **high velocity** until **negative limit switch valid**.
2. Move in **positive direction** at **high velocity** until **homing switch valid**.
3. Move in **negative direction** at **low velocity** and stops **after homing switch** and **first encoder Z-signal valid.**

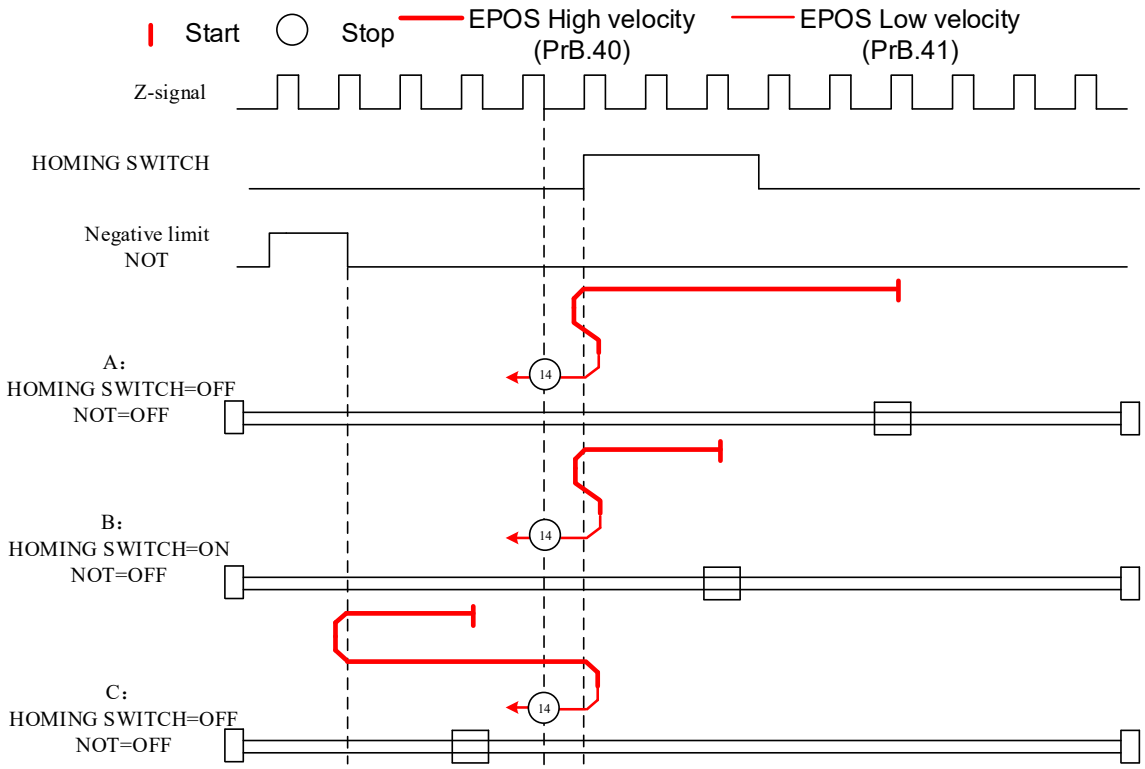

Limit switch signal triggering detection mode

Mode 17:

This mode is similar to mode 1. Only difference is that homing point detection is not through Z-signal but through triggering of negative limit switch signal

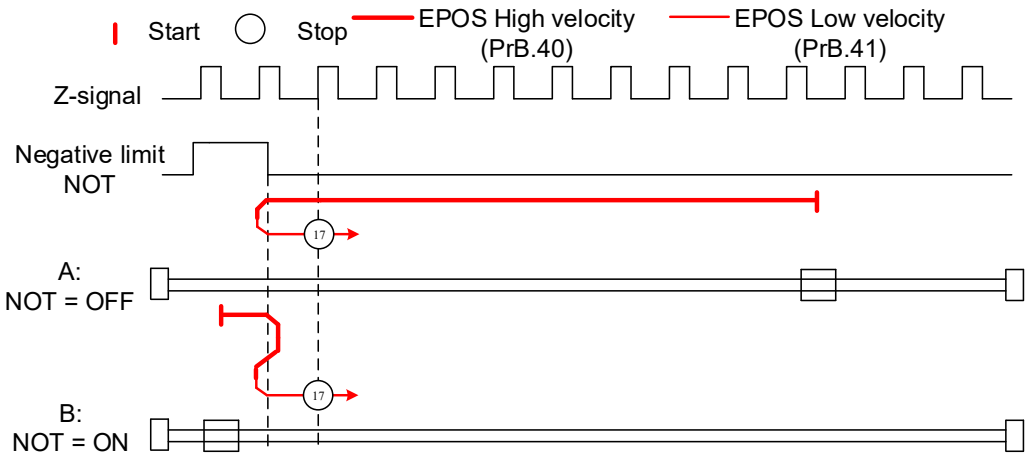

Mode 18:

This mode is similar to mode 2. Only difference is that homing point detection is not through Z-signal but through switching of positive limit switch signal

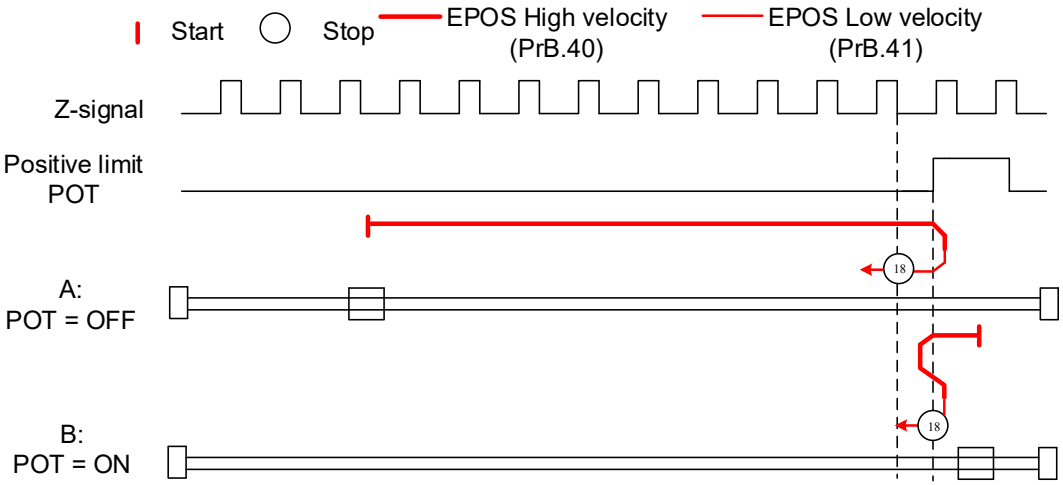

Homing switch signal triggering detection mode

Mode 19:

This mode is similar to mode 3. Only difference is that homing point detection is not through Z-signal but through triggering of homing switch signal

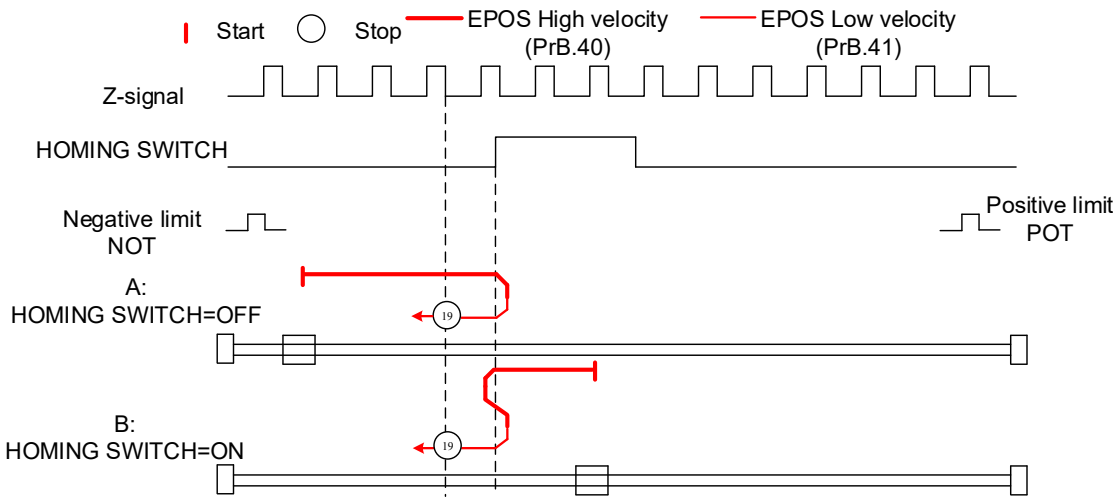

Mode 20:

This mode is similar to mode 4. Only difference is that homing point detection is not through Z-signal but through triggering of homing switch signal

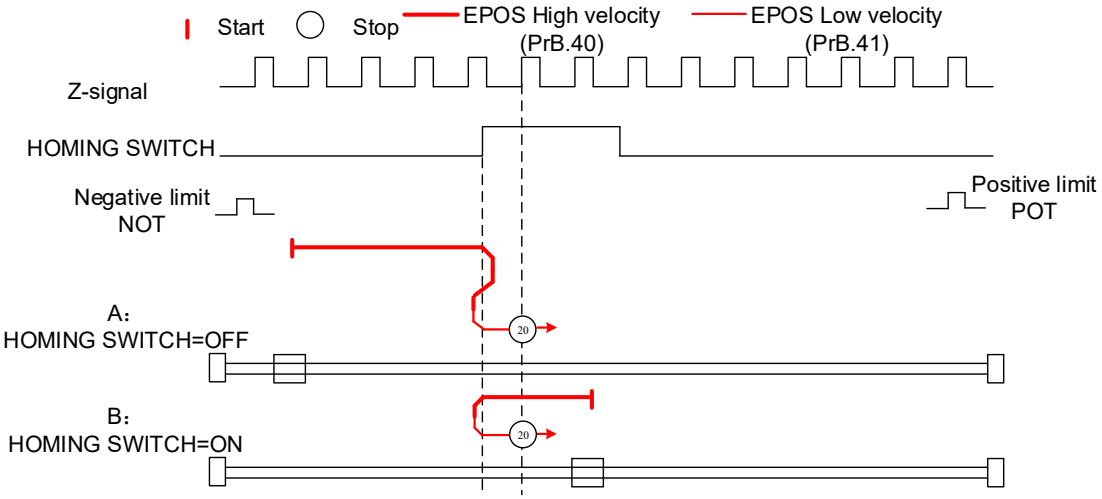

Mode 21:

This mode is similar to mode 5. Only difference is that homing point detection is not through Z-signal but through triggering of homing switch signal.

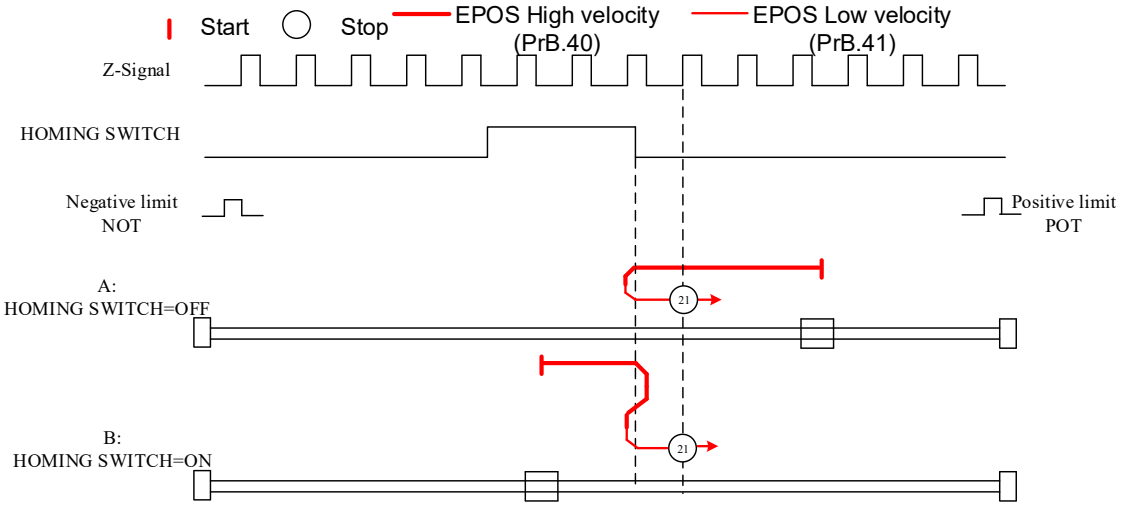

Mode 22:

This mode is similar to mode 6. Only difference is that homing point detection is not through Z-signal but through triggering of homing switch signal.

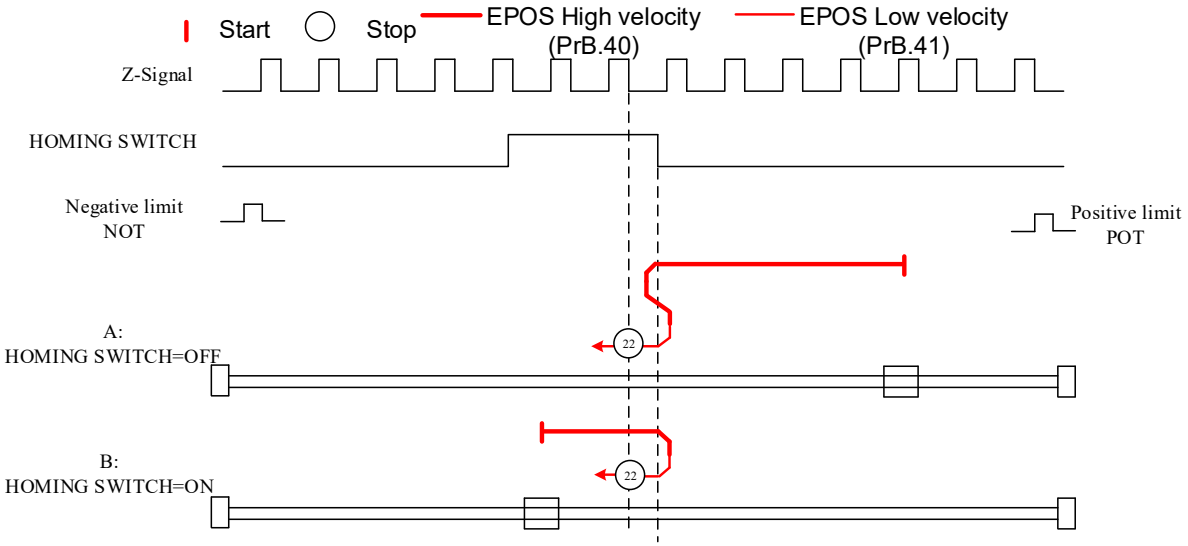

Mode 23:

This mode is similar to mode 7. Only difference is that homing point detection is not through Z-signal but through triggering of homing switch signal.

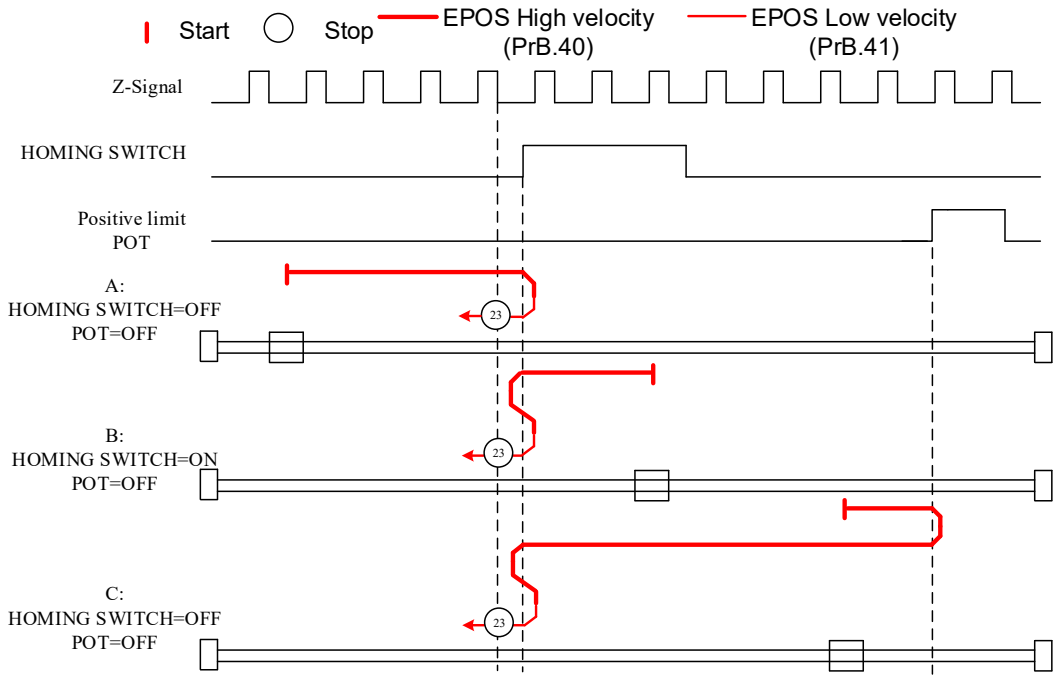

Mode 24:

This mode is similar to mode 8. Only difference is that homing point detection is not through Z-signal but through triggering of homing switch signal.

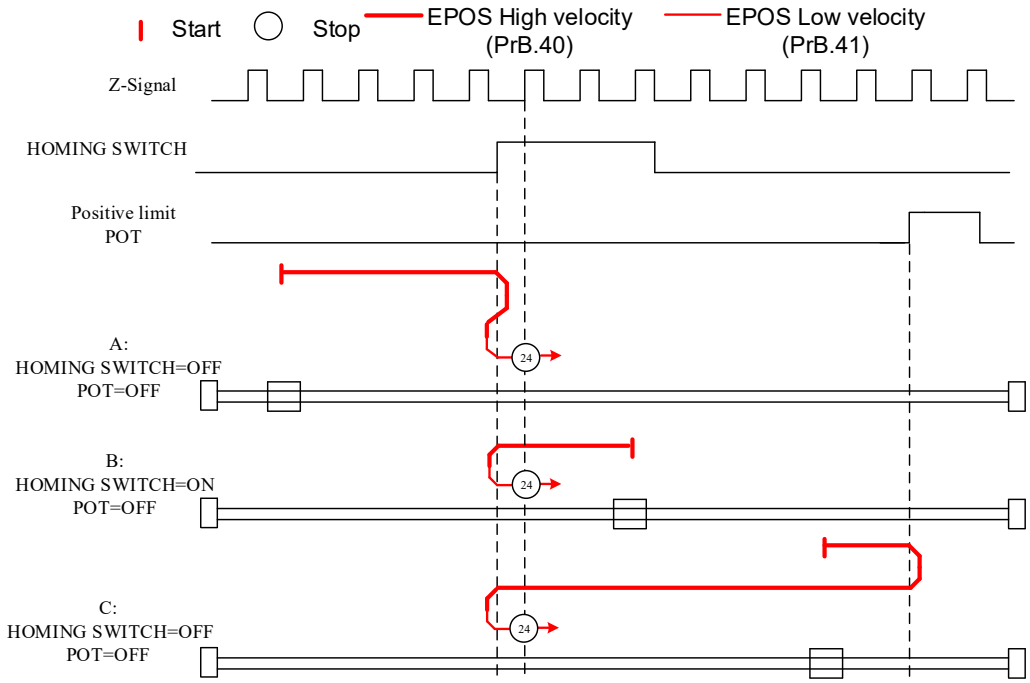

Mode 25:

This mode is similar to mode 9. Only difference is that homing point detection is not through Z-signal but through triggering of homing switch signal

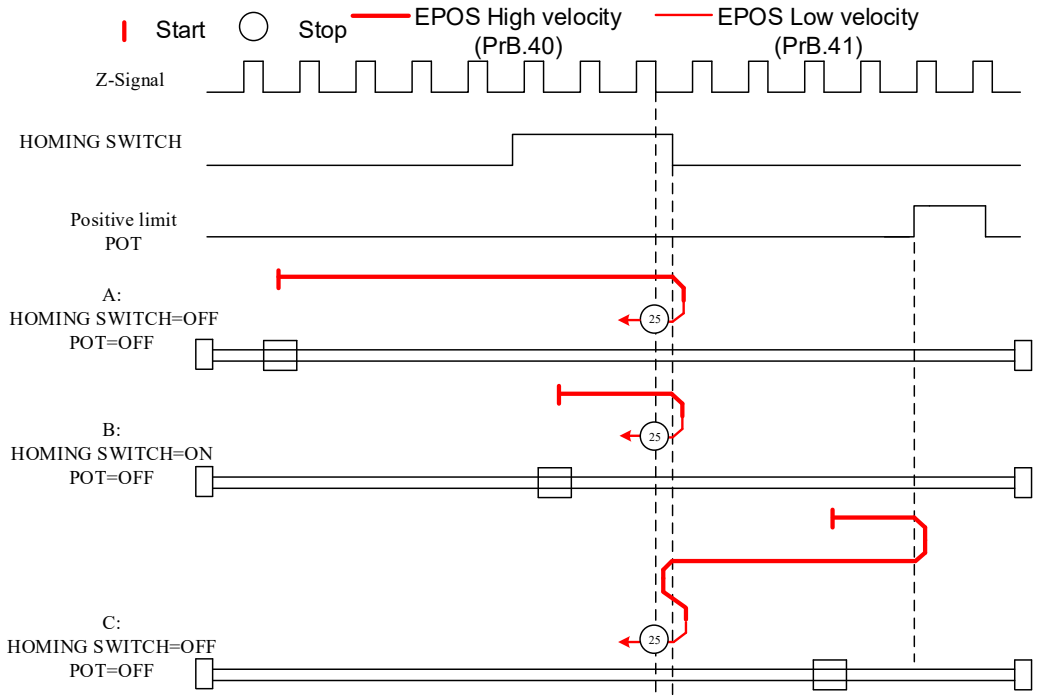

Mode 26:

This mode is similar to mode 10. Only difference is that homing point detection is not through Z-signal but through triggering of homing switch signal

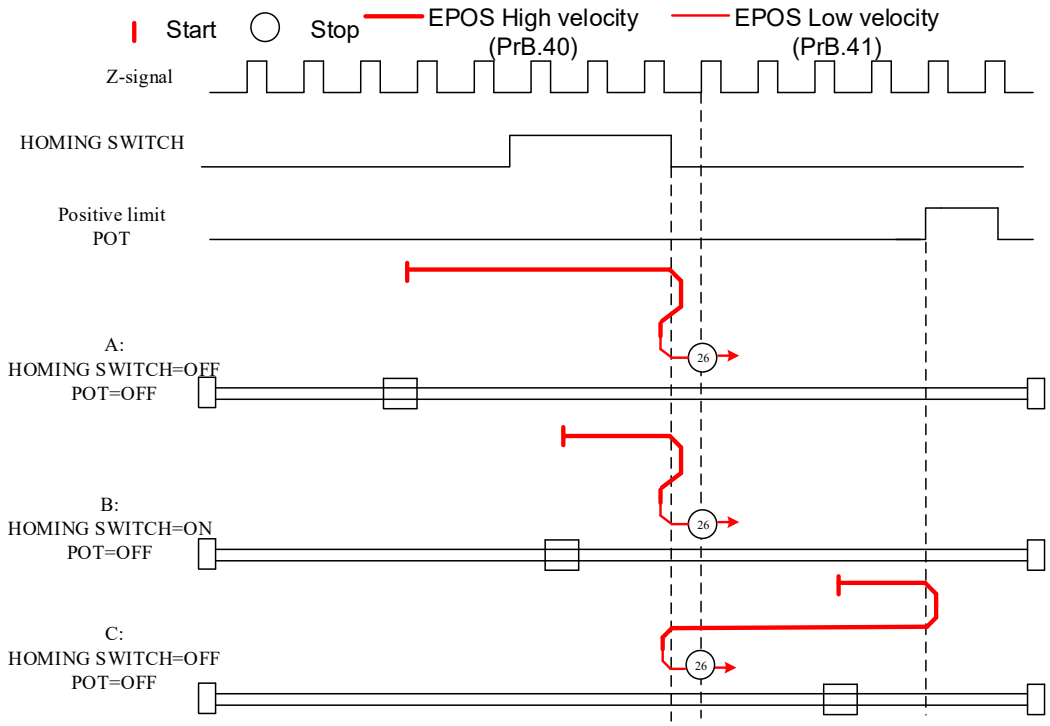

Mode 27：

This mode is similar to mode 11. Only difference is that homing point detection is not through Z-signal but through triggering of homing switch signal

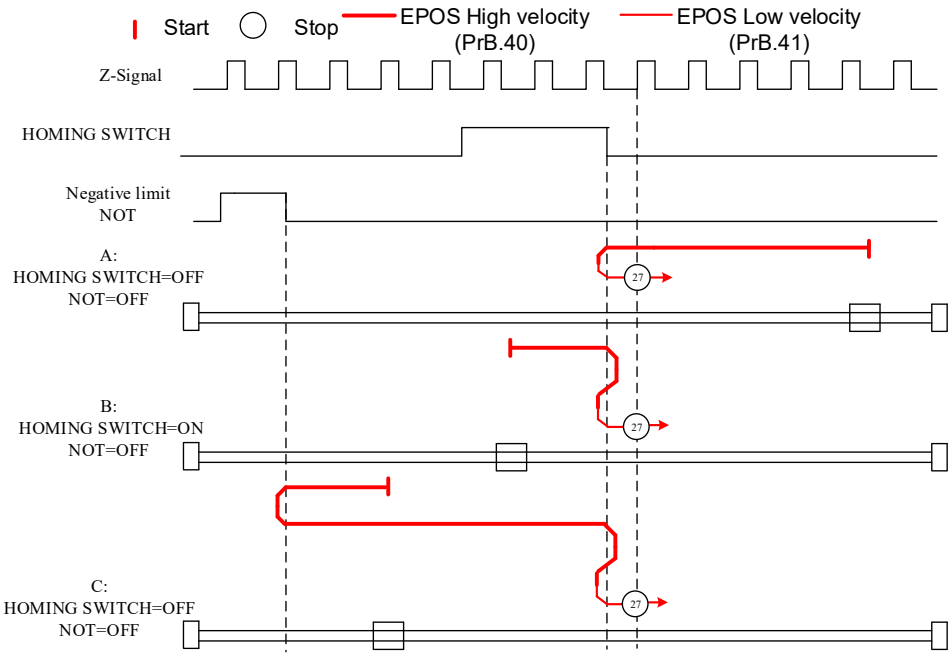

Mode 28：

This mode is similar to mode 12. Only difference is that homing point detection is not through Z-signal but through triggering of homing switch signal

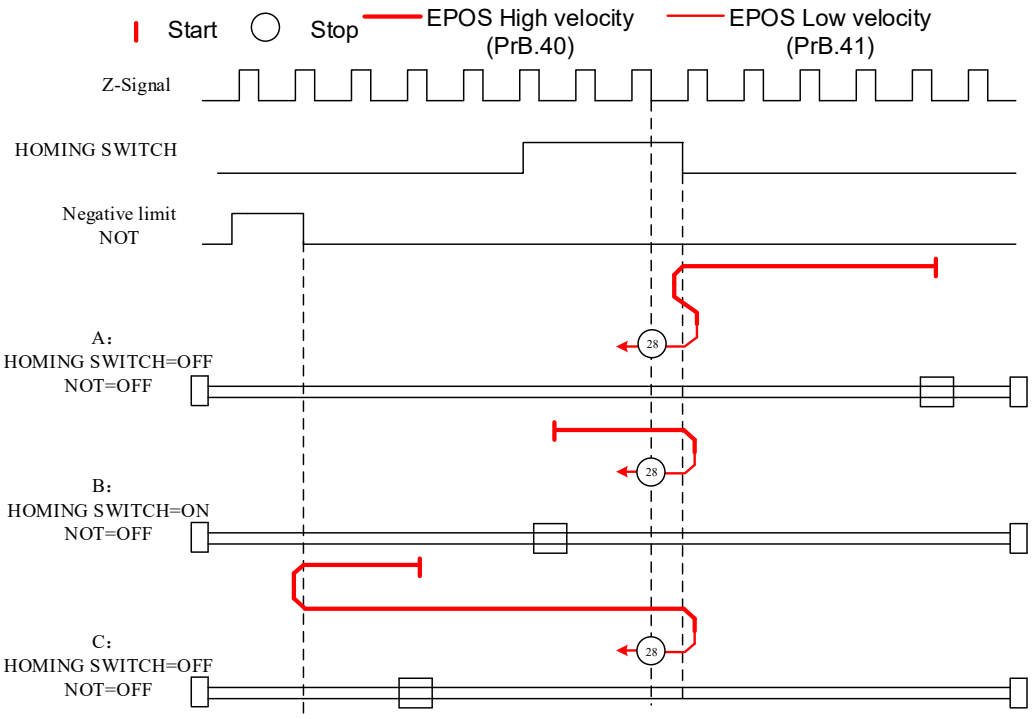

Mode 29:

This mode is similar to mode 13. Only difference is that homing point detection is not through Z-signal but through triggering of homing switch signal

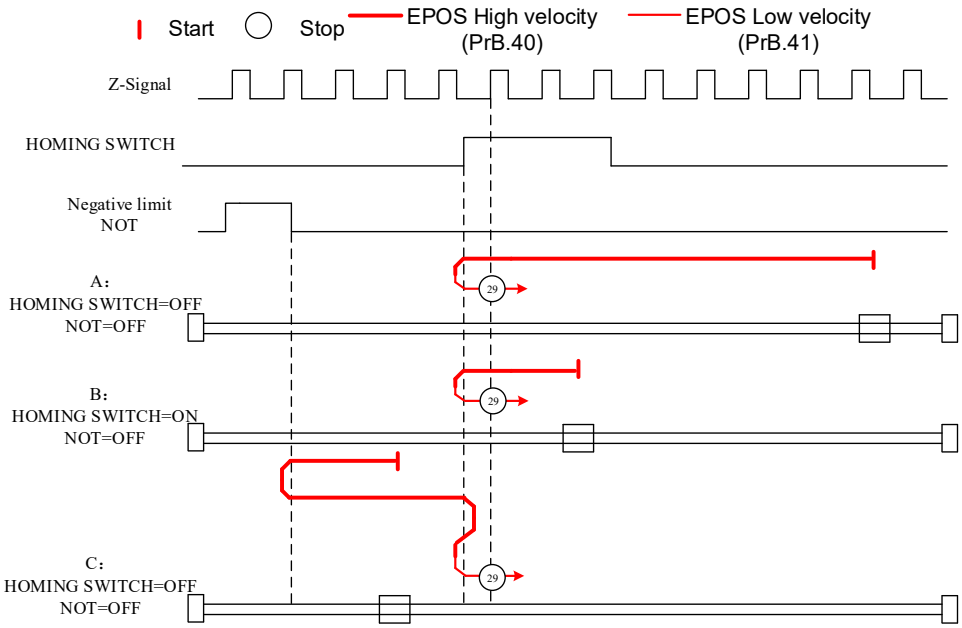

Mode 30:

This mode is similar to mode 14. Only difference is that homing point detection is not through Z-signal but through triggering of homing switch signal

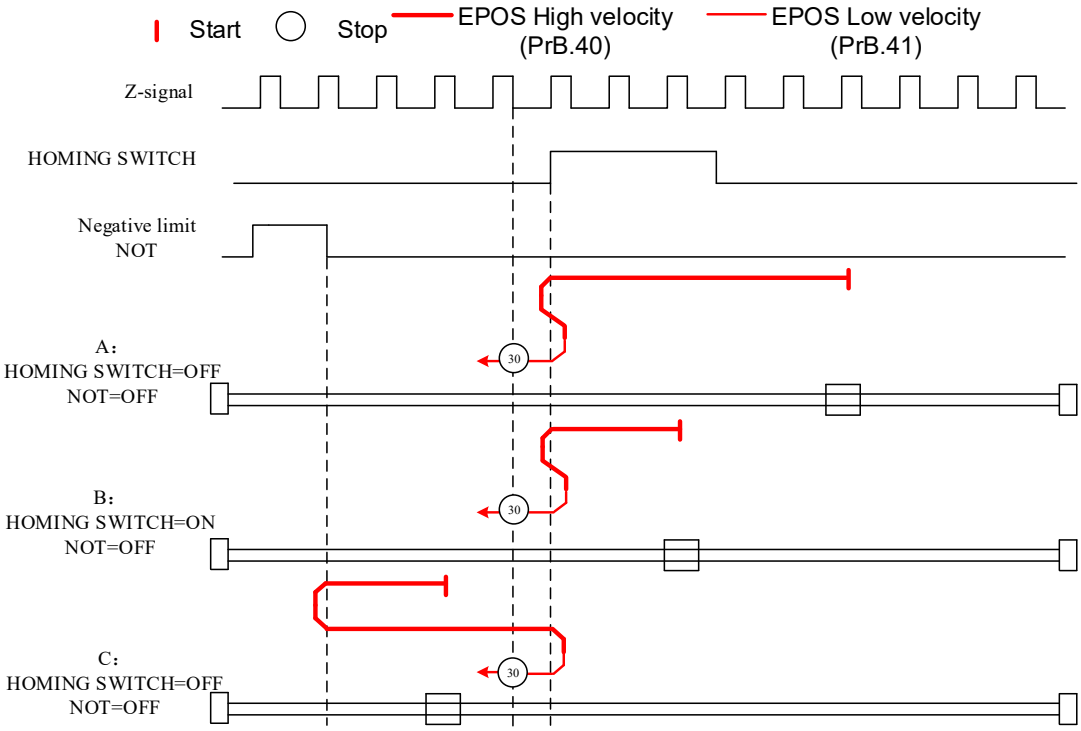

Other modes

Mode 33:

The motor starts to move in **negative direction** and stops when the **Z-signal is valid**.

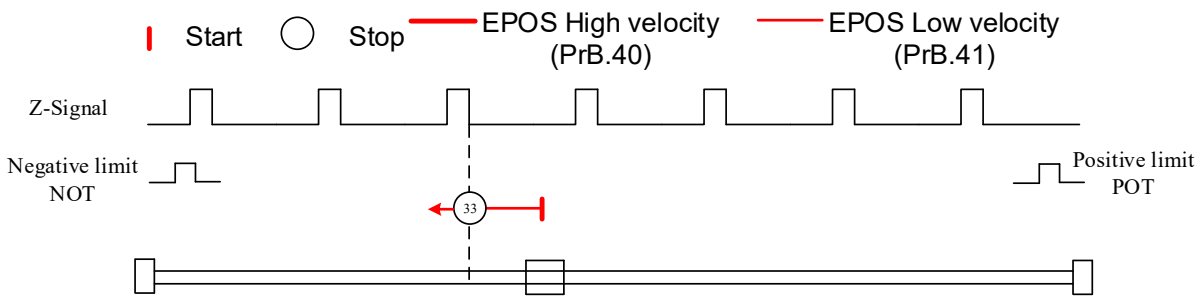

Mode 34:

The motor starts to move in **positive direction** and stops when the **Z-signal is valid**.

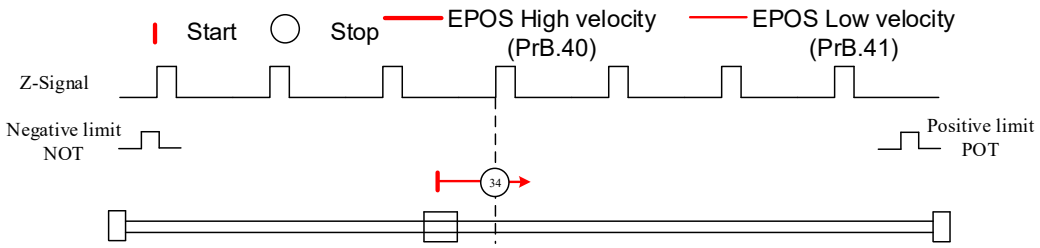

Mode 35/37:

Set the current position as homing point. Using this mode, motor doesn't have to be enabled.

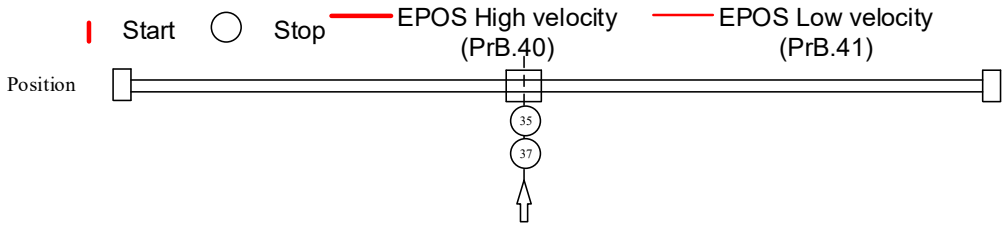

Chapter 7 Warning and Alarm

7.1 Servo drive warning

When warning occurs, driver will set protective function but **motor won't stop moving**. Error code will be displayed on the front panel.

Example of warning code:

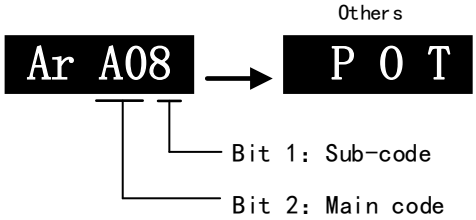

Warning Code		Content
Main	**Code**	
A0	1	Overload warning
	2	Regeneration energy overload warning(**85% of the regeneration threshold**)
	3	Absolute encoder **battery voltage low (<3.1V)**. Valid when Pr0.15 is set to 1.
	4	Change the parameter to a non-real time valid warning
	5	Pr0.01 Control Mode ≠ 9. Please set Pr0.01=9.
	7	Low temperature warning **(< 20℃)**
	8	Positive limit switch valid. **POT** blinking on front panel
	9	Negative limit switch valid. **NOT** blinking on front panel
	A	Positive and negative limit switch valid. **PNOT** blinking on front panel
	B	Current position is beyond software positive limit. **SPOT** blinking on front panel
	C	Current position is beyond software negative limit. **NPOT** blinking on front panel
	D	Current position is beyond software negative, positive limit. **SPNOT** blinking on front panel
	E	Parameters reset to factory default. Restart needed

7.2 Servo drive alarm

When alarm occurs, driver will set protective function and **motor stops moving**. Error code will be displayed on the front panel. Alarm history record can also be viewed in data monitoring mode, with the alarm log sub-menu displaying "**d12Er**".

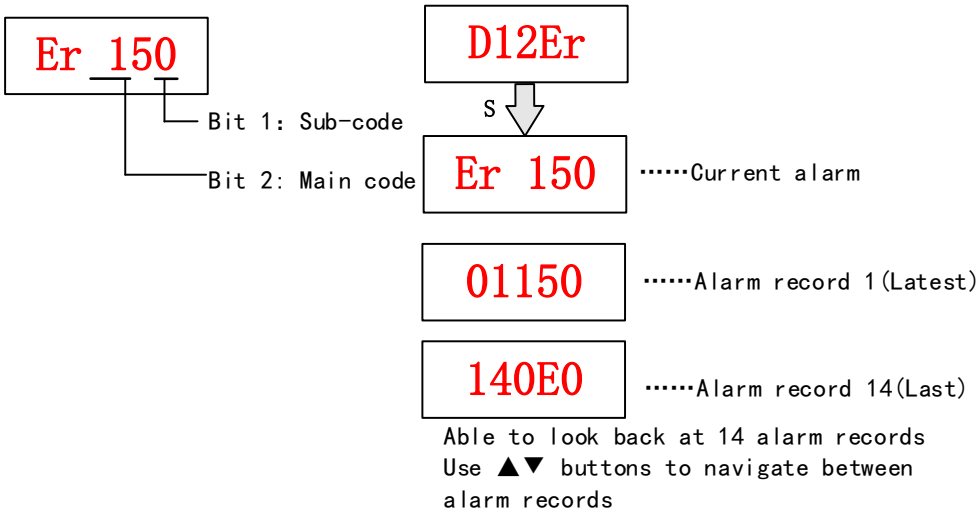

Error code		Content	Attribute		
Main	Sub		Save	Type	Clearable
09	0~F	FPGA communication error	●	2	
0A	0~1	Circuit current detection error	●	2	
	3	Motor power cable not connected	●	1	
0b	0	Control circuit power supply voltage too low		2	
	1	Control circuit power supply voltage too high		2	●
0c	0	DC bus overvoltage	●	1	●
0d	0	DC bus undervoltage	●	1	●
	1	Single phasing of main power supply	●	2	
	2	No main power supply detected		2	
0E	0	Overcurrent	●	1	
	1	Intelligent Power Module (IPM) overcurrent	●	1	
	2	Power output to motor shorted to ground	●	1	
	4	Phase overcurrent	●	1	
0F	0	Driver overheated	●	2	
10	0	Motor overloaded	●	1	●
	1	Driver overloaded	●	1	●
	2	Motor rotor blocked	●	1	●
12	0	Regenerative resistor overvoltage	●	2	
	1	Holding brake error	●	1	
	2	Regenerative resistor value too low	●	2	
15	0	Encoder disconnected	●	1	
	1	Encoder communication error	●	1	

	2	Encoder initial position error	●	1	
	3	Multiturn encoder error	●	2	
	4	Encoder parameter settings error	●	2	
	5	Encoder data overflow	●	2	●
	6	Encoder overheated	●	2	●
	7	Encoder counter error	●	2	●
17	0	Encoder data error	●	1	
	1	Encoder parameter initialization error	●	1	
18	0	Excessive position deviation	●	2	●
	1	Excessive velocity deviation	●	2	●
19	0	Motor vibration too strong	●	2	●
	1	Excessive hybrid position deviation	●	1	●
1A	0	Overspeed	●	2	●
	1	Velocity out of control	●	1	●
1b	0	Bus input signal dithering	●	2	●
	1	Incorrect electronic gear ratio	●	2	●
	3	External encoder frequency divider parameter error	●	1	
	4	Excessive synchronous position command	●	2	●
1c	0	Both STO failed	●	1	
	1	1st STO failed	●	1	
	2	2nd STO failed	●	1	
	3	STO power supply 3.3v anomaly		2	
	4	STO power supply 5.0v anomaly		2	
	5~8	Faulty STO internal optocoupler, inverter		2	
21	0	I/O input interface assignment error	●	2	
	1	I/O input interface function assignment error	●	2	
	2	I/O output interface function assignment error	●	2	
24	0	EEPROM parameter initialization error		2	
	1	I2C communication status error		2	
	2	Error r/w alarm history record		2	
	3	Error r/w diagnostic data		2	
	4	Error r/w 402 parameters		2	
	5	Error r/w communication parameters		2	
26	0	Positive/Negative position limit triggered under non-homing mode	●	2	●
27	0	Analog 1 input overrun limit	●	2	●
	1	Analog 2 input overrun limit	●	2	●
57	0	Forced alarm input valid(E-stop)	●	2	●
5F	0	Motor model no. detection error		2	
	1	Driver power module detection error		2	
60	0	Main loop interrupted timeout		2	
	1	Velocity loop interrupted timeout		2	
70	0	Encryption error		2	
89	0	Homing error		2	●

Save: Save error messages to alarm history.
Type: The type 1 and type 2 fault stop mode can be set via Pr5.10 [Sequence at alarm].
Clearable: Clearable alarm by operating the front panel and use auxiliary function **AFACL** as below. Besides clearable alarms, please first solve the error and restart the servo driver to clear alarm.

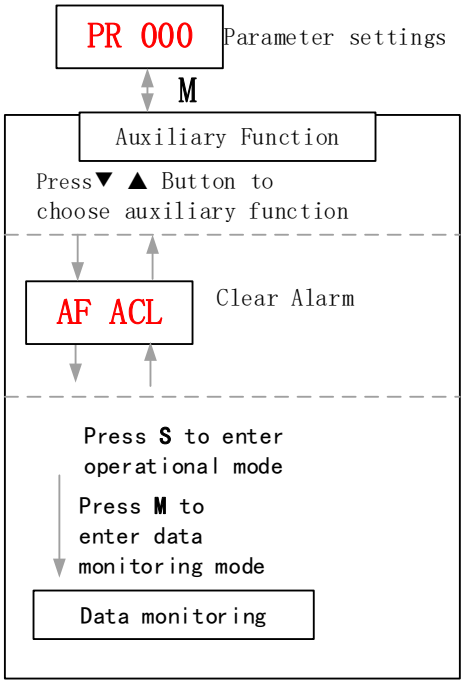

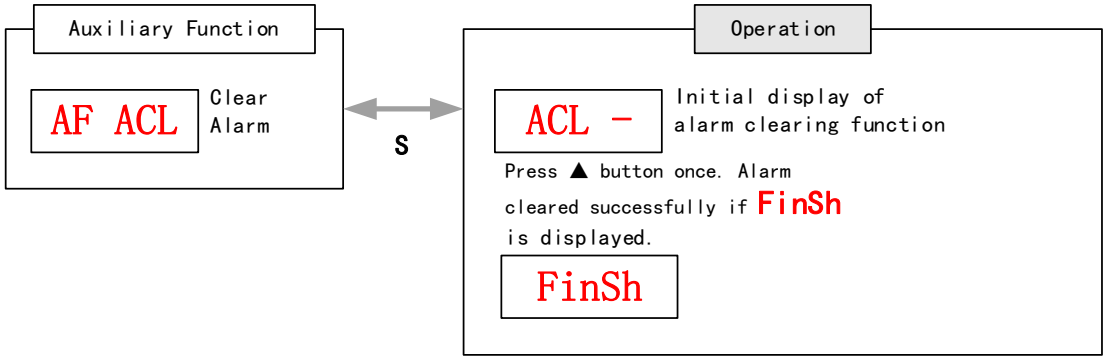

7.3 Alarm Handling

***When error occurs, please solve accordingly. Then, restart. If the solutions described don't work, please consider replacing the driver.*

Error code	Main	Sub	**Display:** "**Er 090**"--"**Er 09F**"	
	09	0~F	**Content:** FPGA communication error	
Cause			Diagnosis	Solution
L1, L2 terminal voltage too low			Verify L1, L2 terminal voltage	Make sure L1, L2 terminal voltage is within recommended range

Error code	Main	Sub	**Display:** "**Er 0A0**"--"**Er 0A1**"	
	0A	0~1	**Content:** Circuit current detection error	
Cause			Diagnosis	Solution
Motor power cable wiring error			Verify motor power cable wiring	Make sure U,V,W terminal wired properly
Main power supply undervoltage			Verify L1,L2,L3 terminal voltage	Increase main power supply voltage

Error code	Main	Sub	**Display:** "**Er 0A3**"	
	0A	3	**Content:** Motor power cable not connected	
Cause			Diagnosis	Solution
Motor power cable not connected			Verify motor power cable wiring	Measure **resistance values between U, V, W terminals**, make sure the values are almost equal. If not, might be due to damaged motor or motor winding open circuit.
Motor fault			/	Replace motor

Error code	Main	Sub	**Display:** "**Er 0b0**"	
	0b	0	**Content:** Control circuit power supply voltage too low	
Cause			Diagnosis	Solution
Control circuit power supply voltage too low			Verify L1C, L2C terminal voltage; check if wiring connection is tight	Increase L1C, L2C terminal voltage; Tighten L1C, L2C terminal connection
Power supply under capacity			/	Increase power supply capacity for L1C, L2C terminals

Error code	Main	Sub	**Display:** "**Er 0b1**"	
	0b	1	**Content:** Control circuit power supply abnormal	
Cause			Diagnosis	Solution
USB power supply too low			Verify if USB cable is properly connected and not damaged.	Replace USB Type-C cable

Error code	Main	Sub	Display: "Er 0c0"	
	0c	0	**Content:** DC bus overvoltage	
Cause			Diagnosis	Solution
Main power supply overvoltage			Verify L1,L2,L3 terminal voltage	Decrease main power supply voltage
Acceleration/deceleration time too short			Verify if the time is actually too short	Increase the duration time or change to a regenerative resistor with higher resistance.
Regenerative brake parameter anomaly			Verify Pr7.32/Pr7.33	Modify vent overload parameter
Inner brake circuit damaged			/	Replace driver

Error code	Main	Sub	Display: "Er 0d0"	
	0d	0	**Content**: DC bus undervoltage	
Cause			Diagnosis	Solution
Main power supply undervoltage			Verify L1,L2,L3 terminal voltage	Increase main power supply voltage
L1C, L2C connected when USB cable is connected			Control circuit power on before driver initialization. Alarm might occur.	Please disconnect the USB cable before powering on control circuit.

Error code	Main	Sub	Display: "Er 0d1"	
	0d	1	**Content**: Single phasing of main power supply	
Cause			Diagnosis	Solution
Main power supply undervoltage			Verify L1,L2,L3 terminal voltage	Increase main power supply voltage
Main power supply wiring error			Loose connection of L1, L2, L3	Secure connections

Error code	Main	Sub	Display: "Er 0d2"	
	0d	2	**Content**: No main power supply detected	
Cause			Diagnosis	Solution
No main power supply			Verify L1,L2,L3 terminal voltage	1. Increase main power supply voltage 2. Secure connections

Error code	Main	Sub	Display: "Er 0E0"	
	0E	0	**Content:** Overcurrent	
Cause			Diagnosis	Solution
Driver power output short circuit			Verify if there is short circuit between UVW terminals, or shorted to PG.	1. Make sure there is no circuit. 2. Make sure motor is not damaged
Motor wiring error			Verify motor wiring	Reconnect motor wiring
IGBT module short circuit			Disconnect motor output cable. Then, enable servo driver to check for overcurrent	Replace driver
Control parameter anomaly			Verify if parameter exceeds recommended range	Set parameter within recommended range.
Control command anomaly			Verify if command motion is too acute	Modify control command; use filter

Error code	Main	Sub	Display: "Er 0E1"	
	0E	1	**Content**: Intelligent Power Module (IPM) overcurrent	
Cause			Diagnosis	Solution
Driver power output short circuit			Verify if there is short circuit between UVW terminals, or shorted to PG.	1. Make sure there is no circuit. 2. Make sure motor is not damaged
Motor wiring error			Verify motor wiring	Reconnect motor wiring
IGBT module short circuit			Disconnect motor output cable. Then, enable servo driver to check for overcurrent	Replace driver
IGBT module undervoltage			/	Replace driver
Control parameter anomaly			Verify if parameter exceeds recommended range	Set parameter within recommended range.
Control command anomaly			Verify if command motion is too acute	Modify control command; use filter

Error code	Main	Sub	Display: "Er 0E2"	
	0E	2	**Content**: Power output to motor shorted to ground	
Cause			Diagnosis	Solution
Driver U, V, W terminals shorted to ground			Disconnect motor power cable and check for short circuit between driver UVW and PE	1. Reconnect wiring. 2. Change motor power cable.
Motor shorted to ground			Connect motor power cable to driver power output. Verify if resistance value of UVW to PE is in the range of MegaOhm (MΩ)	Replace motor

Error code	Main	Sub	Display: "Er 0E4"	
	0E	2	**Content**: Phase overcurrent	
Cause			Diagnosis	Solution
Driver U, V, W terminals shorted to ground			Disconnect motor power cable and check for short circuit between driver UVW and PE	1. Reconnect wiring. 2. Change motor power cable.
Motor shorted to ground			Connect motor power cable to driver power output. Verify if resistance value of UVW to PE is equal and if there is short circuit	Replace motor

Error code	Main	Sub	Display: "Er 0F0"	
	0F	0	**Content**: Driver overheated	
Cause			Diagnosis	Solution
Temperature of power module exceeded upper limit			Measure the temperature of driver radiator.	1. Improve cooling condition. Please check installation guide; 2. Replace driver and motor with higher power rating; 3. Increase duration time for acceleration and deceleration; 4. Decrease load

Error code	Main	Sub	Display: "Er 100"	
	10	0	**Content:** Motor overloaded	
Cause			Diagnosis	Solution
Load too heavy			Verify if actual load exceeds maximum value allowed	1. Decrease load 2. Adjust limit values
Strong mechanical vibration			Look for mechanical vibration from machine system	1. Adjust gain value of control loop 2. Increase duration time for acceleration and deceleration
Motor or encoder cable wiring error			Verify motor and encoder wiring	1. Reconnect wiring 2. Replace motor and encoder cable
Holding brake engaged			Verify holding brake terminal voltage	Cut off holding brake

Error code	Main	Sub	Display: "Er 101"	
	10	1	**Content:** Driver overloaded	
Cause			Diagnosis	Solution
Motor power cable wiring error			UVW terminals wiring error	Make sure motor power cable wiring connection is correct
Motor not matched			Motor current is too high	Motor rated current is higher than driver rated current. Please change to a driver with higher rated current.

Error code	Main	Sub	Display: "Er 102"
	10	2	Content: Motor rotor blocked

Cause	Diagnosis	Solution
Motor rotor blocked	Look for mechanical blockages	Check the machinery
Motor rotor blocking time threshold value too low	Verify value of Pr6.57	Adjust value of Pr6.57

Error code	Main	Sub	Display: "Er 120"
	12	0	Content: Regenerative resistor overvoltage

Cause	Diagnosis	Solution
Regenerative energy exceeded capacity of regenerative resistor	1. Verify if velocity is too high 2. Verify if load is too large	1. Decrease motor rotational velocity; 2. Decrease load inertia; 3. Add an external regenerative resistor;
Power supply voltage too high	1. Verify if power supply voltage is within the rated range. 2. Interval regenerative resistor value is too low	1. Decrease power supply voltage 2. Increase regeneration resistance value(add external regenerative resistor)
Unstable power supply voltage	Verify if power supply voltage is stable	Add a surge suppressor to main power supply.
Regenerative energy discharge circuit damaged	/	1. Add an external regenerative resistor; 2. Replace driver

Error code	Main	Sub	Display: "Er 121"
	12	1	Content: Holding brake error

Cause	Diagnosis	Solution
Holding brake circuit damaged	Regenerative resistor disconnected	Replace regenerative resistor
	Holding brake IGBT damaged	Replace driver

Error code	Main	Sub	Display: "Er 122"
	12	2	Content: Regenerative resistor value too low

Cause	Diagnosis	Solution
External regenerative resistor value is less than the minimum value allowed by the drive	/	Replace the regenerative resistor with the right resistance value which meets the specification of the driver

Error code	Main	Sub	**Display:** "**Er 150**"	
	15	0	**Content:** Encoder disconnected	
Cause			Diagnosis	Solution
Encoder cable disconnected			Verify encoder cable connection	Make sure encoder cable properly connected
Encoder cable wiring error			Verify if encoder wiring is correct	Reconnect encoder wiring
Encoder damaged			/	Replace motor
Encoder measuring circuit damaged			/	Replace driver

Error code	Main	Sub	**Display:** "**Er 151**"	
	15	1	**Content:** Encoder communication error	
Cause			Diagnosis	Solution
Encoder wire shielding layer is missing			Verify if encoder cable has shielding layer	Replace with standard encoder cable
Encoder cable wiring error			Verify if encoder wiring is correct	Reconnect encoder wiring
Encoder damaged			/	Replace motor

Error code	Main	Sub	**Display:** "**Er 152**"	
	15	2	**Content:** Encoder initial position error	
Cause			Diagnosis	Solution
Communication data abnormal			1. Verify if encoder power supply voltage is DC5V±5% ; 2. Verify if encoder cable and shielded layer is not damaged; 3. Verify if encoder cable is close to high-powered power supply cable	1. Make sure encoder power supply voltage is stable 2. Make sure encoder cable is not damaged. 3. Make sure encoder cable shielded layer is grounded to frame 4. Make sure encoder cable is away from high-powered power supply cable
Encoder damaged			/	Replace motor
Encoder measuring circuit damaged			/	Replace driver

Error code	Main	Sub	Display: "Er 153"	
	15	3	Content: Multiturn encoder error	
Cause			Diagnosis	Solution
Initial use			Origin calibration not performed	Perform origin positioning and multiturn position initialization, calibrate the origin of coordinate system.
Encoder without multiturn absolute function used			Verify if encoder has multiturn absolute function	1. Replace the motor with a multiturn absolute encoder. 2. Set Pr0.15 = 0 to deactivate multiturn absolute function.
Low battery power			Replace battery and restart driver to clear alarm	Replace battery
Battery has no power or has been dismantled			Alarm not cleared after replacing battery and restart	Absolute position lost. Return to origin and perform multiturn initialization, calibrate the origin of coordinate system

Error code	Main	Sub	Display: "Er 154"	
	15	4	Content: Encoder parameter settings error	
Cause			Diagnosis	Solution
Absolute encoder mode is incorrectly set.			Verify if encoder has multi-turn absolute value function.	Modify absolute encoder mode settings

Error code	Main	Sub	Display: "Er 154"	
	15	4	Content: Encoder parameter settings error	
Cause			Diagnosis	Solution
Absolute encoder mode is incorrectly set.			Verify if encoder has multi-turn absolute value function.	Modify absolute encoder mode settings

Error code	Main	Sub	Display: "Er 155"	
	15	5	Content: Encoder data overflow	
Cause			Diagnosis	Solution
Encoder data overflow			Verify if encoder is not damaged	Initialize multiturn data
Absolute value applications, motor rotates in one direction			Verify if encoder is not damaged	Adjust absolute value application mode, set to turntable mode

Error code	Main	Sub	Display: "Er 156"	
	15	6	Content: Encoder overheated	
Cause			Diagnosis	Solution
The encoder temperature is too high.			Verify if motor temperature is too high	Reduce encoder temperature.

Error code	Main	Sub	Display: "Er 157"
	15	7	Content: Encoder counter error

Cause	Diagnosis	Solution
Encoder data overflow	Verify if encoder is not damaged	Initialize multiturn data
Absolute value applications, motor rotates in one direction	Verify if encoder is not damaged	Adjust absolute value application mode, set to turntable mode

Error code	Main	Sub	Display: "Er 170"
	17	0	Content: Encoder data error

Cause	Diagnosis	Solution
Communication data abnormal	1. Verify if encoder power supply voltage is DC5V±5% ; 2. Verify if encoder cable and shielded layer is not damaged; 3. Verify if encoder cable is close to high-powered power supply cable	1. Make sure encoder power supply voltage is stable 2. Make sure encoder cable is not damaged. 3. Make sure encoder cable shielded layer is grounded to frame 4. Make sure encoder cable is away from high-powered power supply cable
Encoder damaged	/	Replace motor
Encoder measuring circuit damaged	/	Replace driver

Error code	Main	Sub	Display: "Er 171"
	17	1	Content: Encoder parameter initialization error

Cause	Diagnosis	Solution
Driver and motor not matched	Verify driver and motor models.	Replace with matching driver and motor
Error while getting parameters from encoder	1. Verify if encoder cable is standard. 2. Verify if encoder has no peeled insulator, broken connection or improper contact.	Use standard encoder cable, verify the connection of both sides of driver and motor, change encoder cable if necessary

Error code	Main	Sub	Display: "Er 180"
	18	0	Content: Excessive position deviation

Cause	Diagnosis	Solution
Improper position deviation settings	Verify if value of Pr_014 is too low	Increase value of Pr_014
Position gain setting too low	Verify if values of Pr1.00 & Pr1.05 are too low	Increase values of Pr1.00 & Pr1.05
Torque limit too low	Verify if values of Pr0.13 & Pr5.22 are too low	Increase values of Pr0.13 & Pr5.22
Excessive external load	1. Verify if acceleration and deceleration duration time is too low. 2. Verify if rotational velocity is too high 3. Verify if load is too large	1. Increase duration time for acceleration and deceleration 2. Decrease rotational velocity 3. Decrease load

Error code	Main	Sub	Display: "Er 181"
	18	1	Content: Excessive velocity deviation

Cause	Diagnosis	Solution
Deviation between set velocity and actual velocity is too great	Verify if value of Pr6.02 is too low	1. Increase value of Pr6.02; 2. Set Pr6.02 to 0, position error detection off.
Acceleration and deceleration duration time for set velocity is too low	Verify if value of Pr3.12 and Pr3.13 are too low	1. Increase value of Pr3.12, Pr3.13; 2. Adjust velocity gain to reduce velocity lag error

Error code	Main	Sub	Display: "Er 190"
	19	0	Content: Vibration too strong

Cause	Diagnosis	Solution
Resonance	Mechanical stiffness is too high, resonance occurs	Reduce mechanical stiffness or use filter
Current loop gain too large	Verify current loop gain value	Reduce current loop gain

Error code	Main	Sub	Display: "Er 1A0"
	1A	0	Content: Overspeed

Cause	Diagnosis	Solution
Motor velocity exceeded first speed limit (Pr3.21)	1. Verify if velocity command is too high; 2. Verify if simulated velocity command voltage is too high; 3. Verify if parameter value of Pr3.21 is too low; 4. Verify if input frequency and division frequency coefficient of pulse train is proper; 5. Verify if encoder is wired correctly	1. Adjust velocity input command; 2. Increase Pr3.21 value; 3. Adjust pulse train input frequency and division frequency coefficient; 4. Verify encoder wiring;

Error code	Main	Sub	**Display:** "**Er 1A1**"
	1A	1	**Content:** Velocity out of control

Cause	Diagnosis	Solution
Motor velocity out of control, Excessive velocity error	Verify encoder phase sequence; Verify if UVW cable is connected to the right terminal	Reconnect UVW if wrongly connected. If still remains unsolved, please contact technical support.

Error code	Main	Sub	**Display:** "**Er 1b0**"
	1b	0	**Content:** Bus input signal dithering

Cause	Diagnosis	Solution
Controller synchronization dithering	/	Increase alarm threshold value

Error code	Main	Sub	**Display:** "**Er 1b1**"
	1b	1	**Content:** Incorrect electronic gear ratio

Cause	Diagnosis	Solution
Values out of range	Numerator or denominator is zero/Set values out of range	Reduce number of pulses per revolution

Error code	Main	Sub	**Display:** "**Er 1c0**"
	1c	0	**Content:** Both STO failed

Cause	Diagnosis	Solution
Both STO input signals valid	Verify if STO power supply is normal	Verify 24V STO power supply and power cable connection
	Disconnect switch connected to STO	Close switch

Error code	Main	Sub	**Display:** "**Er 1c1**"
	1c	1	**Content:** 1st STO failed

Cause	Diagnosis	Solution
1st STO input signal valid	Verify if STO power supply is normal	Verify 24V STO power supply and power cable connection
	Disconnect switch connected to STO	Close switch

Error code	Main	Sub	Display: "Er 1c2"	
	1c	2	Content: 2nd STO failed	
Cause			Diagnosis	Solution
2nd STO input signal valid			Verify if STO power supply is normal	Verify 24V STO power supply and power cable connection
			Disconnect switch connected to STO	Close switch

Error code	Main	Sub	Display: "Er 210"	
	21	0	Content: I/O input interface assignment error	
Cause			Diagnosis	Solution
Input signal assigned with two or more functions.			Verify values of Pr4.00-Pr4.09, Pr4.44-4.47	Set proper values for Pr4.00-Pr4.09, Pr4.44-4.47

Error code	Main	Sub	Display: "Er 211"	
	21	1	Content: I/O input interface function assignment error	
Cause			Diagnosis	Solution
Input signal assignment error			Verify values of Pr4.00-Pr4.09, Pr4.44-4.47	Set proper values for Pr4.00-Pr4.09, Pr4.44-4.47

Error code	Main	Sub	Display: "Er 212"	
	21	2	Content: I/O output interface function assignment error	
Cause			Diagnosis	Solution
Input signal assigned with two or more functions.			Verify values of Pr4.10-Pr4.15	Set proper values for Pr4.10-Pr4.15
Input signal not assigned			Verify values of Pr4.10-Pr4.15	Set proper values for Pr4.10-Pr4.15

Error code	Main	Sub	Display: "Er 240"	
	24	0	Content: CRC correction error during EEPROM parameter saving	
Cause			Diagnosis	Solution
L1, L2 terminal voltage too low			Verify if L1, L2 terminal voltage too low	Make sure L1, L2 terminal voltage is within recommended range
Parameter saving anomaly			Save parameter again and restart	Save parameter again

Error code	Main	Sub	Display: "Er 241"	
	24	1	Content: EEPROM hardware error	
Cause			Diagnosis	Solution
EEPROM damaged			Multiple failures upon saving	Change driver or upgrade firmware

Error code	Main	Sub	Display: "Er 242"	
	24	2	Content: Error saving alarm history	
Cause			Diagnosis	Solution
Power down during alarm saving			Check alarm during power down	Restart
Different alarms continuously			Check alarm code	Check for other alarm causes
EEPROM damaged			Multiple failures upon saving	Change driver or upgrade firmware

Error code	Main	Sub	Display: "Er 243"	
	24	3	Content: Error saving manufacturer's error	
Cause			Diagnosis	Solution
Power down before saving is completed			-	Wait for saving to be completed before power down
EEPROM damaged			Multiple failures upon saving	Change driver or upgrade firmware

Error code	Main	Sub	Display: "Er 244"	
	24	4	Content: Error saving communication parameters	
Cause			Diagnosis	Solution
Power down before saving is completed			-	Wait for saving to be completed before power down
EEPROM damaged			Multiple failures upon saving	Change driver or upgrade firmware

Error code	Main	Sub	Display: "Er 245"	
	24	5	Content: Error saving 402 parameters	
Cause			Diagnosis	Solution
Power down before saving is completed			-	Wait for saving to be completed before power down
EEPROM damaged			Multiple failures upon saving	Change driver or upgrade firmware

Error code	Main	Sub	Display: "Er 246"	
	24	6	Content: Error saving data during power down	
Cause			Diagnosis	Solution
Power down too quick			-	Wait for saving to be completed before power down
EEPROM damaged			Multiple failures upon saving	Change driver or upgrade firmware

Error code	Main	Sub	Display: "Er 260"	
	26	0	Content: Positive/Negative position limit triggered under non-homing mode	
Cause			Diagnosis	Solution
Positive/negative position limit triggered			Verify position limit signal	/

Error code	Main	Sub	Display: "Er 270" -- "Er 271"	
	27	0~1	Error description: Analog input 1-2 out of range	
Cause			Diagnosis	Solution
Analog value out of range			Verify if analog input value is out of range	Adjust analog input voltage

Error code	Main	Sub	Display: "Er 280"	
	28	0	Error description: Output pulse frequency too high	
Cause			Diagnosis	Solution
Frequency divided pulse output exceeds 1MHz			Verify if motor rotational speed and the number of frequency divided pulse output are too high	Reduce the number of frequency divided pulse output or reduce rotational speed

Error code	Main	Sub	Display: " Er 570"	
	57	0	Error description: Forced alarm input valid	
Cause			Diagnosis	Solution
Forced alarm input signal occurred			Verify forced alarm input signal	Verify if the input wiring connection is correct

Error code	Main	Sub	Display: "Er 5F0"	
	5F	0	Content: Motor model no. detection error	
Cause			Diagnosis	Solution
Automatically detected motor doesn't match set motor			/	Please contact our technical support

Error code	Main	Sub	Display: "Er 5F1"	
	5F	1	Error description: Driver power module detection error	
Cause			Diagnosis	Solution
Driver power rating not within range.			Restart driver	Please contact our technical support

Error code	Main	Sub	Display: "Er 600"	
	60	0	**Error description:** Main loop interrupted timeout	
Cause			Diagnosis	Solution
The motor control loop calculation time overflow			Check for interference from devices releasing electromagnetic field	Ground driver and motor to reduce interference
			Restart driver	Replace driver

Error code	Main	Sub	Display: "Er 700"	
	70	0	**Error description:** Encryption error	
Cause			Diagnosis	Solution
Encryption error during initialization upon power-on.			Restart driver	Please contact our technical support

Error code	Main	Sub	Display: "Er 890"	
	89	0	**Error description:** Homing error	
Cause			Diagnosis	Solution
1. Excess homing velocity 2. Homing mode is different from given signal 3. Sensor signal edge inconsistent			1. Verify if homing velocity is too high 2. Verify if homing mode is set correctly 3. Verify if sensor signal edge is consistent	1. Set an optimal homing velocity 2. Make sure sensor signal edge is consistent.
Inconsistent origin status			1. Homing acceleration/ deceleration is set too low 2. Electronic gear ratio is low which causes acceleration/ deceleration to be too low	1. If electronic gear ratio cannot be changed, please set a suitable 609A. 2. Increase electronic gear ratio

Error code	Main	Sub	Display: "Er 81b"
	92	0	**Error description:** Disconnected
Cause			Network cable disconnected
Status			Alarm. Driver operation stops.
Solution			Please make sure if network cable connecting to driver is loose or disconnected.

7.4 Alarm clearing

7.4.1 Servo Drive Alarm

For alarm can be cleared，There are 2 methods.

Method 1：

Use auxiliary function “**AF_ACL**”

1、Press M to select auxiliary function , Press SET to enter into “**AF_ACL**” , Press and hold to clear the alarm

Method 2：

Set IO input function as Alarm clear input “ (A-CLR)”，refer to switch input interface connection to clear the alarm.

Contact Us

Leadshine Technology Co., Ltd.

Headquarters

Address:
15-20/F, Block B, Nanshan I Valley, No.3157, Nanshan District, Shenzhen City, Guangdong Province, China
Tel:
+86 755 26411692
Fax:
+86 755 26402718
Website:
www.leadshine.com
Emails:
sales@leadshine.com

Leadshine Global Retailers Network

Get in touch with us or any of your local Leadshine certified retailers by visiting our global website.

Technical Support
Tel: 86-755-2641-8447
86-755-2641-8774 (Asia, Australia, Africa)
86-755-2665-5136 (North and South America)
86-755-8654-2465 (Europe)
Fax: 86-755-2640-2718
Email: tech@leadshine.com

Sales Hot Line
Tel: 86-755-2641-7674 (Asia, Australia, Africa)
86-755-2641-7617 (North and South America)
86-755-2640-9254 (Europe)
Email: sales@leadshine.com

Leadshine Overseas

Leadshine America, Inc.

North America Office

Address:

26050 Towne Centre Dr.
Foothill Ranch California
United States

Tel:

1-949-608-7270

Fax:

1-949-638-7298

Website:

www.leadshineusa.com

Emails:

sales@leadshineusa.com